ROBINSON HELICOPTER COMPANY

R66 MAINTENANCE MANUAL
AND INSTRUCTIONS FOR CONTINUED AIRWORTHINESS
RTR 660 VOLUME I

Production Certificate Number 424WE
Type Certificate Number R00015LA

Robinson Helicopter Company
2901 Airport Drive
Torrance, California 90505-6115
United States of America

Phone: (310) 539-0508
Fax: (310) 539-5198
Web: https://robinsonheli.com

OFFICE HOURS

Monday through Friday, 7:30 a.m. to 4:30 p.m., Pacific Time.
Lunch hour is 11:30 a.m. to 12:30 p.m.

HOLIDAYS

Please visit https://robinsonheli.com for a list of holidays and company shutdowns.

CUSTOMER SUPPORT AND SPARES ORDERS

Please visit https://robinsonheli.com for Customer Support contact information. Procure parts from any R66 Dealer or Service Center, or order directly from RHC Customer Service via email, fax, or phone.

PUBLICATIONS

Viewing RHC Maintenance Manuals (MMs) and Illustrated Parts Catalogs (IPCs) online at https://robinsonheli.com is recommended to ensure use of current data. Viewing MMs and IPCs offline via paper or digital download requires verification that the data is current. Refer to the online MM or IPC Revision Log for the list of current pages.

SUBSCRIPTION ORDER AND RENEWAL FORMS

Subscription order and renewal forms are located at https://robinsonheli.com.

WARRANTY INFORMATION

Helicopter and parts warranty information is located at https://robinsonheli.com.

CHAPTER LIST

	Introduction
Chapter 1	General
Chapter 4	Airworthiness Limitations
Chapter 5	Inspections
Chapter 6	Dimensions and Descriptions
Chapter 7	Jacking and Hoisting
Chapter 8	Weight and Balance
Chapter 9	Ground Handling
Chapter 10	Parking and Storage
Chapter 11	Placards and Markings
Chapter 12	Servicing
Chapter 18	Track and Balance
Chapter 20	Standard Practices
Chapter 21	Environment Control
Chapter 22	Autopilot
Chapter 25	Furnishings
Chapter 28	Fuel System
Chapter 29	Hydraulics
Chapter 32	Landing Gear
Chapter 33	Lights
Chapter 52	Doors and Windows
Chapter 53	Fuselage
Chapter 62	Main Rotor
Chapter 63	Main Rotor Drive System
Chapter 64	Tail Rotor
Chapter 65	Tail Rotor Drive System
Chapter 67	Flight Controls
Chapter 71	Powerplant
Chapter 75	Engine Air Systems
Chapter 76	Engine Controls
Chapter 79	Engine Oil System
Chapter 90	Police Version
Chapter 92	E.N.G. Version
Chapter 95	Instrument System
Chapter 96	Electrical System
Chapter 97	Avionics
Chapter 98	Wiring Diagrams
Chapter 99	Special Tools
Chapter 100	Revision Log

Intentionally Blank

TECHNICAL PUBLICATIONS

RECOMMENDED CHANGE REPORT

Please direct recommended changes to RHC Technical Publications via the email address listed below, by phone, or by submitting a duplicate of this completed form by fax or mail. Please include or have available the information detailed in this form.

Recommended changes may include but are not limited to general comments, corrections, omitted information, or clarification of instructions.

Please send recommendations to:

Email: techpubs@robinsonheli.com
Phone: (310) 539-0508
Fax: (310) 539-5198

Robinson Helicopter Company
Attention: Technical Publications
2901 Airport Drive
Torrance, CA 90505-6115
UNITED STATES

Date: ____________________ Publication: ____________________

Name: ____________________ Chapter: ____________________

Company: ____________________ Section: ____________________

Helicopter Model: ____________________ Page: ____________________

Serial Number: ____________________ Revision: ____________________

Phone: ____________________

Email: ____________________

COMMENTS:

Intentionally Blank

CHAPTER 1

GENERAL

Section	Title	Page
1-00	Introduction	1.1
1-10	R66 Maintenance Manual Revisions	1.1
1-20	R66 Maintenance Authorization	1.2
1-30	Component Maintenance Authorization	1.2
1-40	Maintenance Record	1.2
1-50	Notations	1.3
1-55	Maintenance Manual and Illustrated Parts Catalog References	1.3
1-60	Definitions and Abbreviations	1.4
1-70	Service Information	1.4B
1-71	Part Designation	1.4B
1-72	Returning Parts	1.4B
1-73	Ordering and Shipping	1.4B
1-74	Warranty Claims	1.4B
1-75	Customer Support	1.4B
1-80	Assembly Instructions for R66 Helicopter Crated for Export	1.5
1-90	Helicopter Servicing	1.11
1-91	Scheduled Maintenance and Inspections	1.11
1-92	Additional Component Maintenance	1.12

Intentionally Blank

CHAPTER 1

GENERAL

1-00 Introduction

The R66 Maintenance Manual contains instructions necessary for proper maintenance, servicing, and handling of the R66 helicopter. The R66 Instructions for Continued Airworthiness (ICA) includes the R66 Maintenance Manual (MM), R66 Illustrated Parts Catalog (IPC), R66 Service Bulletins (SB), R66 Service Letters (SL), RR300 Series Operation and Maintenance Manual (OMM), applicable Rolls-Royce technical publications, and applicable component manufacturer technical publications.

Service Bulletins are issued by Robinson Helicopter Company (RHC), Rolls-Royce, and component manufacturers. RHC Service Bulletin compliance is mandatory; comply with other applicable Service Bulletins as directed. RHC technical publications are available online at www.robinsonheli.com. Rolls-Royce technical publications are available online at https://fast.aeromanager-online.com.

Kit instructions are issued for field installation of either optional or mandatory (due to Service Bulletin or parts obsolescence) equipment upgrades, or provisions for upgrades. Kit instructions issued by RHC either implement approved type design data, or are approved as type design data.

The R66 Maintenance Manual is formatted in Air Transport Association of America Specification No. 100 (ATA-100). Style, content, and structure deviates from ATA-100 when necessary for clarity, and for logic of presentation. A list of chapters and a complete list of contents is located in the *Introduction*. Chapters are separated by tab dividers and chapter contents are listed in the chapter front pages.

CAUTION

Always read instructions completely before performing a task.

1-10 R66 Maintenance Manual Revisions

Before using the R66 Maintenance Manual, verify it consists of current effective pages. The list of effective pages is located in the Revision Log in Chapter 100. When a new manual is purchased, complete and submit the Subscription Order Form available online at www.robinsonheli.com. Subscribers receive publication revisions for a two-year period. Renew subscriptions annually. The revision status for all RHC technical publications is available online at www.robinsonheli.com.

1-20 R66 Maintenance Authorization

Only appropriately certificated mechanics who have successfully completed an R66 factory-sponsored maintenance course, or are under direct supervision of the above-stated mechanic, are authorized to perform maintenance, repairs, or inspections on the R66 helicopter. Annual inspections of U.S.-registered light helicopters must be performed by holders of an Inspection Authorization (IA) certificate or by repair stations certificated by the Federal Aviation Administration (FAA). The daily preflight and some preventive maintenance may be performed by the above-stated mechanics, or by the pilot/owner after receiving appropriate instruction in accordance with the R66 Pilot's Operating Handbook and applicable aviation regulations.

1-30 Component Maintenance Authorization

Only appropriately certificated mechanics who have successfully completed both a factory-sponsored maintenance course and component maintenance course, and who possess technical data supplied by RHC, are authorized to perform maintenance specified in the Component Maintenance Manual (CMM). Component maintenance may only be performed at an RHC-authorized Service Center that has required special tools.

1-40 Maintenance Record

The Airframe Maintenance Record is available online at www.robinsonheli.com.

Airframe Maintenance Record blank PDF forms may be used for R22-series, R44-series, and R66 Turbine helicopters. Component Record blank PDF forms may be used for life-limited or TBO components. Blank paper copies are available for purchase (P/N R8478 Airframe Maintenance Record and P/N R8479 Component Record [pack of 20]).

A Component Record is a maintenance record of the removals, installations, or maintenance performed on a life-limited or TBO component. When a life-limited or TBO component is installed in the helicopter, the Component Record card is inserted in the Airframe Maintenance Record. When a life-limited or TBO component is removed from the helicopter, remove the Component Record card and keep the card with the Component. Major assemblies may contain one or more life-limited or TBO component.

RHC encourages operators to utilize Component Record cards to assist in tracking time on interchangeable parts since service lives may be different between models.

RHC does not create Component Record cards for spares, however, operators may create their own.

RHC's Repair Station does not require a Component Record card in order to perform work on a component, unlike a Component/Return Authorization form.

RHC recommends using a toner-based laser, or a pigment-based inkjet, color printer and 65 lb white (96 bright) premium card stock for Maintenance Record or Component Record card production. Maintenance Record binders and tab sets are available separately (P/N R8656 Maintenance Record Binder and P/N R8650 Maintenance Record Tabs).

1-50 Notations

The following notations will be found throughout the manual:

NOTE
A NOTE provides emphasis or supplementary explanation.

CAUTION
Equipment damage can result if a **CAUTION** is not followed.

WARNING
Personal injury or death can result if a WARNING is not followed.

1-55 Maintenance Manual and Illustrated Parts Catalog References

Maintenance Manual and Illustrated Parts Catalog Section and Figure references are subject to relocation and renumeration. Effort will be made at the time of RHC technical document revisions to correct superseded references, however, certain documents may not otherwise require revision and superseded references may remain. A keyword or part number search in online documents (Ctrl + F [PC] or Command + F [Mac]) may help to locate applicable data.

1-60 Definitions and Abbreviations

Refer to R66 Pilot's Operating Handbook (POH) Section 1 for additional definitions and abbreviations.

A. Definitions

14 CFR § 27.602 Critical Part:	F016-2 main rotor blades & F029-1 tail rotor blades are critical parts as defined by 14 CFR § 27.602 and are subject to special inspection requirements & reporting described in Chapters 62 & 64. Contact RHC Technical Support if questions arise concerning special inspection or reporting requirements.
12 years:	With respect to a 12 year inspection or life-limit, 12 years means 12 years from the date of the: – factory-issued airworthiness certificate, – factory-issued authorized release certificate (FAA Form 8130-3, Airworthiness Approval Tag), or – last 12-year inspection.
Annually:	With respect to an annual inspection, annually means within the preceding 12 calendar months.
Datum:	An imaginary vertical plane from which all horizontal measurements are taken for balance purposes with the aircraft in level flight attitude. Refer to § 6-20 for R66 datum location.
Empty Weight:	Standard empty weight of a standard helicopter including unusable fuel, full operating fluids, and full engine oil. Basic empty weight is standard empty weight plus weight of installed optional equipment. Refer to R66 Type Certificate Data Sheet (TCDS) R00015LA at: https://drs.faa.gov. Refer to helicopter's Equipment List/Weight and Balance Data Sheet (RF 134) and Weight and Balance Record in R66 POH Section 6 for installed equipment.
Life-Limited Part:	Refer to § 4-10. Any part for which a mandatory replacement limit is specified in the type design, the Instructions for Continued Airworthiness, or the maintenance manual.
Time in Service:	With respect to maintenance time records, time in service means the time from the moment an aircraft leaves the surface of the earth until it touches it at the next point of landing.

1-60 Definitions and Abbreviations (continued)

B. Abbreviations

14 CFR:	Title 14 of the Code of Federal Regulations. The Federal Aviation Regulations (FARs) are part of the CFR.
AOG:	Aircraft on Ground
Assy:	Assembly (component consisting of more than two parts)
ATA-100:	Air Transport Association of America Specification No. 100
BL:	Butt Line Station locations
CRA:	Component Return/Authorization
ELT:	Emergency Locator Transmitter
EMU:	Engine Monitoring Unit
FCU:	Fuel Control Unit
FS:	Fuselage Station locations
GCU:	Generator Control Unit
HID:	High Intensity Discharge
HS:	Horizontal Stabilizer Station locations
ICA:	Instructions for Continued Airworthiness
LBL:	Left Butt Line Station locations
LED:	Light Emitting Diode
LH:	Left-hand
LRU:	Line-Replaceable Unit
MR:	Main Rotor
MRB:	Main Rotor Blade
MRDS:	Main Rotor Drive Shaft
MRGB or MGB:	Main Rotor Gearbox or Main Gearbox
OEM:	Original Equipment Manufacturer
PTG:	Power Turbine Governor
R66 IPC:	R66 Illustrated Parts Catalog
R66 MM:	R66 Maintenance Manual
R66 POH:	R66 Pilot's Operating Handbook
RBL:	Right Butt Line Station locations
RH:	Right-hand
RHC:	Robinson Helicopter Company
RR300 Series OMM:	Rolls-Royce RR300 Series Operation and Maintenance Manual
RS:	Rotor Station locations
SB:	Service Bulletin
SDS:	Safety Data Sheet
SL:	Service Letter
TBO:	Time Between Overhaul
TCDS:	Type Certificate Data Sheet
TIR:	Total Indicator Reading
TR:	Tail Rotor
TRB:	Tail Rotor Blade
TRDS:	Tail Rotor Drive Shaft
TRGB or TGB:	Tail Rotor Gearbox or Tail Gearbox
TS:	Tailcone Station locations
TSN:	Time Since New
TSO:	Time Since Overhaul
WL:	Water Line Station locations

1-70 Service Information

1-71 Part Designation

RHC parts are designated with an alphanumeric part number beginning with letter "A", "B", "C", etc., followed by three digits and a dash number.

A revision letter or letters follow(s) the stamped or ink-marked part number. Revision progression is A thru Z, followed by AA thru AZ, followed by BA thru BZ, etc. Unless otherwise specified, any revision of the same part number is interchangeable, such as "A101-1 A" and "A101-1 D".

A change in dash number indicates a change in form, fit, and/or function (e.g. part number C339-1 is not interchangeable with part number C339-10 even though both are jackshaft weldments for [hydraulic] R44s). Similarly, part numbers F049-6 and F049-06 are not interchangeable because the dash numbers are different.

1-72 Returning Parts

All parts shipped to RHC must include a signed Component Return/Authorization (CRA) Form available online at https://robinsonheli.com.

1-73 Ordering and Shipping

Procure parts from any R66 Dealer or Service Center, or order directly from assigned RHC Customer Service Representative via email, fax, or phone.

1-74 Warranty Claims

Complete CRA Form (refer to § 1-72) and, in the Warranty Claim section, indicate if rotorcraft or component is under warranty. If claim is for parts or for labor allowance due to a Service Bulletin issued against rotorcraft or component, write in "per SB-XX" adjacent to requested warranty action.

1-75 Customer Support

Please visit https://robinsonheli.com for Customer Support contact information.

1-80 Assembly Instructions for R66 Helicopter Crated for Export

> NOTE
>
> Aircraft assembly to be performed by a certificated mechanic.

1. Remove top of cabin assembly crate. Remove wall marked "A" by removing lag bolts painted black. Remove empennage assembly. Remove remaining walls. Remove all parts, except cabin assembly, from crate base. Open crate containing blades, skid tubes, and tailcone.
2. Refer to R66 Illustrated Parts Catalog (IPC) Figure 32-1. Install hardware securing forward and aft strut assemblies (cross tubes installed) onto skid tubes. Standard torque bolts per Section 20-32 and torque stripe per Figure 5-1.
3. Remove tailcone cowling per Section 53-23. Remove engine cowling per Section 53-21.
4. Remove shipping supports (ty-raps, foam, tape, etc.) from main rotor gearbox compartment, but leave cannon plugs taped and fluid line dust caps installed. Remove engine air intake cover by opening air filter bypass door and pulling string and cover through the door. Remove main rotor gearbox mounting hardware, nylon spacers, and upper frame strut assemblies.
5. Remove top of main rotor gearbox crate and position crate so gearbox is upright. Refer to Section 7-20. Install hoisting equipment and lifting fixture or nylon rope on main rotor hub. Remove hoist slack to support gearbox, remove lag bolts securing gearbox to wooden divider, and carefully hoist gearbox from crate (do not damage pitot tube).
6. Install main rotor gearbox per Section 63-20 steps 1 thru 9, but do not remove hoisting equipment and lifting fixture or nylon rope.
7. Perform (engine driveline) forward flex plate shimming per Section 63-11.
8. Refer to Section 7-20. Remove hoist slack to support cabin assembly, remove lag and carriage bolts securing metal angles to crate, and hoist cabin & attached metal angles off of crate base.

> **CAUTION**
>
> Do not lift helicopter and attached crate using main rotor hub; damage to main rotor gearbox and frames could result.

9. Remove metal angles from cabin assembly landing gear attach points. Install landing gear assembly per Section 32-10.

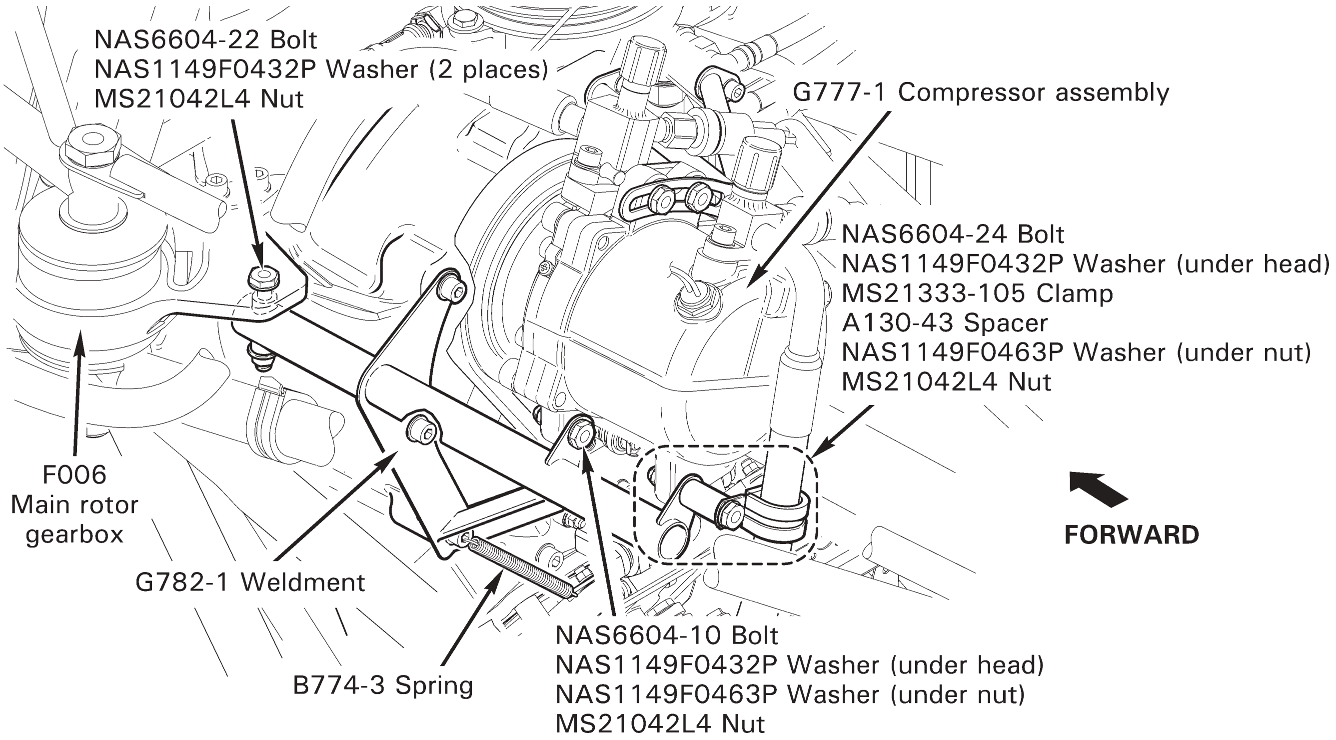

FIGURE 1-1 ASSEMBLY INSTRUCTIONS FOR R66 HELICOPTER CRATED FOR EXPORT

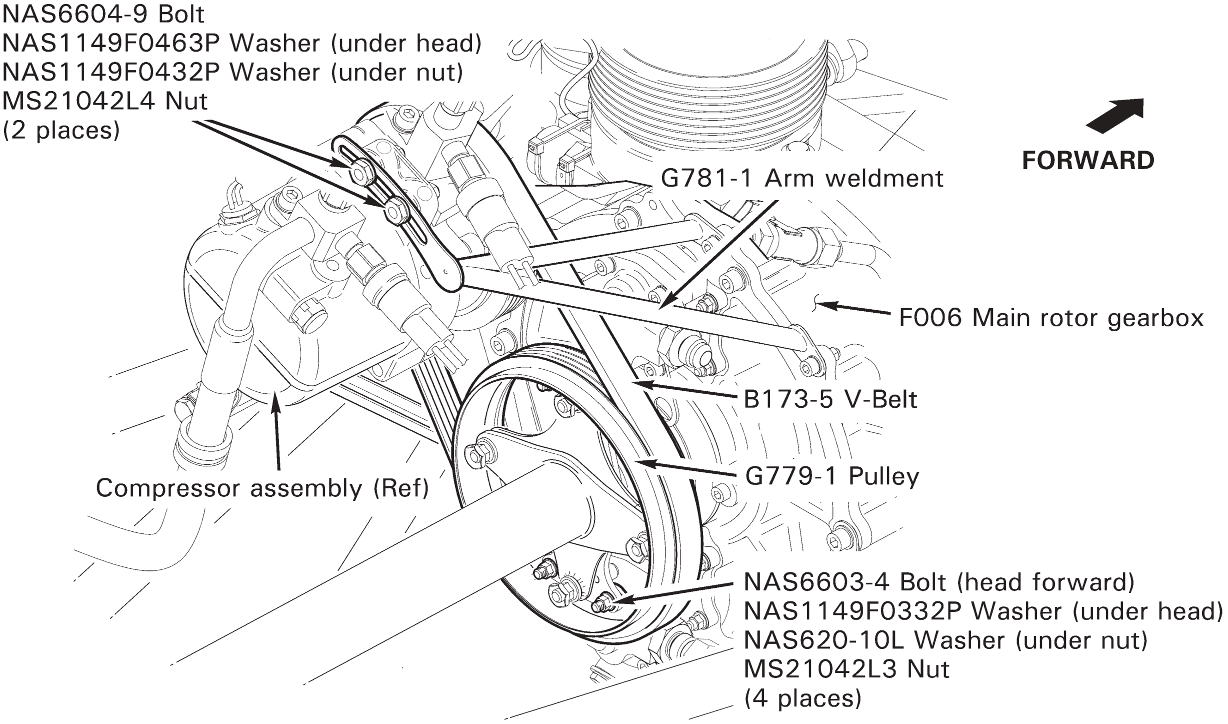

FIGURE 1-2 ASSEMBLY INSTRUCTIONS FOR R66 HELICOPTER CRATED FOR EXPORT

1-80 Assembly Instructions for R66 Helicopter Crated for Export (continued)

10. For air-conditioned ships:

    a. Refer to Figure 1-1. Remove shipping supports (ty-raps, foam, tape, etc.) from G777-1 compressor assembly. Install hardware securing G782-1 mount weldment to main rotor gearbox. Standard torque hardware per § 20-32 and torque stripe per Figure 5-1. Hook B774-3 spring in drilled hole of NAS1352-4H14 screw. Verify security.

    b. Refer to Figures 1-1 and 1-2. Verify B173-5 V-belt is in good condition. Fit belt around G779-1 pulley and compressor pulley, and install hardware securing compressor to G782-1 mount weldment. Standard torque bolts per § 20-32.

    c. Refer to Figure 1-2. Install hardware securing compressor to G781-1 arm weldment. Rotate compressor up and outboard to tension belt, then tighten hardware securing compressor to weldment. Verify belt is properly aligned on both pulleys. Adjust belt tension until 4.5-5.5 lb of force applied mid-span deflects belt 0.16-inch. Standard torque bolts per § 20-32.

    d. Connect compressor assembly wiring to airframe harness at connectors and install ty-raps as required. Cinch ty-raps until snug without over-tightening, and trim tips flush with heads.

11. Refer to IPC Figure 79-1. Remove F237-1 tailcone frame weldment and F305-5 (aft) inlet. Install tail rotor drive fan shaft (fanwheel installed) through scroll assembly. Install hardware securing aft inlet to scroll assembly. Verify security.

12. Refer to IPC Figure 65-1. Install hardware securing C947-3 plate assembly to F908-1 yoke and tail rotor drive fan shaft. Standard torque bolts and palnuts per § 20-32 and torque stripe per Figure 5-1.

13. Remove shipping supports (ty-raps, foam, tape, etc.) from tailcone assembly, and install tailcone per § 53-40 steps 1 thru 7. Install strobe light. Install communication and GPS antennas (if equipped).

14. Install empennage assembly per § 53-70. Install horizontal stabilizer assemblies per §§ 53-60 & 53-80.

15. Service tail rotor gearbox per § 12-21. Service main rotor gearbox per § 12-11.

16. Remove hydraulic reservoir shipping plug. Install D487-3 vent assembly, special torque vent to 100 in.-lb, and torque stripe per § Figure 5-1 (do not safety wire).

17. Install tail rotor assembly per § 64-10. Match color-coded markings on blades with pitch links.

18. Install main rotor blades per § 62-10. Match color-coded markings on blades with markings on hub and pitch links.

19. Inside engine compartment, remove anti-ice valve cap, starter-generator cap, inducer bleed hose cover, exhaust pipe cover and desiccant, and combustion case drain valve cap. Connect inducer bleed hose to box assembly and tighten clamp. Verify security.

1-80 Assembly Instructions for R66 Helicopter Crated for Export (continued)

20. If ship is equipped with attitude horizon, directional gyro, turn coordinator, and/or vertical card magnetic compass:

A. Attitude Horizon, Directional Gyro, and Turn Coordinator Installation

CAUTION
Directional gyro mount screws must not exceed 1-inch in length.

1. Place a piece of foam under instrument face. Remove (6) screws securing face to console and gently pull face forward. Remove hardware securing instrument hole covers to face and remove covers. Install instruments and secure to face with hardware provided.

2. Connect straight connector(s) to directional gyro and/or turn coordinator. Connect angle connector to attitude horizon, ensuring strain relief points down. Ensure connectors lock. Ty-rap excess wiring. Install screws securing instrument face to console.

B. Vertical Card Magnetic Compass Installation

1. Locate airframe wiring (in windshield center bow), install 2-inch length of B158-3 heat shrink over wiring, and connect compass pins to airframe sockets (polarity is not critical). Slide heat shrink over connection and apply heat. Install (4) screws securing compass to mount, securing wiring atop compass.

21. Connect battery per § 96-10.

NOTE
Check battery open circuit voltage and perform boost charging or capacity tests as required per Concorde Battery Instructions for Continued Airworthiness.

22. Perform pitot-static leak check per § 95-10.

23. Install Emergency Locator Transmitter (ELT) per § 25-61, as required. Install tailcone cowling assembly per § 53-23.

24. Install fire extinguisher per § 25-62, as required.

25. Fuel helicopter per § 12-41.

26. Verify all shipping supports (ty-raps, foam, tape etc.) have been removed from helicopter. Refer to § 6-70. Secure access panels and inspection doors.

NOTE
Flight checks to be performed by a qualified pilot and certificated mechanic.

27. Perform ground check per § 5-41 steps 2 thru 9.

1-80 Assembly Instructions for R66 Helicopter Crated for Export (continued)

28. Depreserve the engine after storage per RR300 Series Operation and Maintenance Manual (OMM). Install starter-generator cooling hose. Install engine cowling per § 53-21.
29. Install tail rotor dynamic balance equipment per § 18-21.
30. Perform run-up per § 5-42 steps 2 thru 16.
31. Perform tail rotor dynamic balance per § 18-20.
32. Remove tail rotor dynamic balance equipment. Install main rotor balance equipment per § 18-11.

CAUTION

Mast fairing, cowlings, and panels must be installed for flight.

33. Perform hover checks per § 5-43 step 1. DO NOT proceed into forward flight.
34. Track and balance main rotor per § 18-12.
35. While climbing at maximum continuous torque, 60 KIAS:
    a. Evaluate vibration level and controllability.
    b. Perform momentary 30° left yaw to check for adequate directional control.
36. Level flight at typical cruise altitude (deviate as required for weather and terrain), maximum continuous torque:
    a. Evaluate longitudinal and lateral cyclic control forces.
    b. Evaluate collective control forces.
37. Evaluate vibration level at maximum continuous torque and straight-and-level flight.
38. During autorotation at 50 KIAS and 90% rotor RPM, perform momentary 30° right yaw to check for adequate directional control.
39. Check all instruments, gages, and avionics for proper operation.

TABLE 1 SCHEDULED INSPECTIONS Consult latest revision of listed publications for specific applicability.	First 100 Hours*	100 Hours**	200 Hours**	300 Hours**	400 Hours**	600 Hours**	1000 Hours**	2000 Hours**	12 Months**	24 Months**	5 Years**	6 Years**	12 Years**	15 Years**	3000 Cycles**
Replace main gearbox oil filter per § 12-12.	●					●									
Perform 100-hour / annual inspection per § 5-45.		●							●						
Perform main rotor blade tip maintenance per § 62-60.		●													
As required by RR300 Series Operation and Maintenance Manual (OMM), perform maintenance and inspection.			●		●			●	●						●
Service inlet barrier filter per § 71-21.				●					●						
Replace both 9v back-up batteries under LH front seat (ships with Lithium-ion main battery only).									●						
Replace main gearbox oil per § 12-11.						●									
Drain and flush tail rotor gearbox per § 12-23.						●									
Replace hydraulic filter per § 12-32.						●									
Clean gearbox chip detectors per § 12-13 & 12-22.						●			●						
Lubricate swashplate bearings per § 12-90.							●					●			
Perform 2000-hour/12-year inspection per § 5-50.								●					●		
Perform main gearbox internal visual inspection per § 5-74.									●						
Perform pop-out float leak check per § 32-64 Part A.									●						
Test and inspect transponder per 14 CFR § 91.413. (U.S.-registered helicopters only).										●					
Perform pop-out float inflation check per § 32-64 Part B.											●				
Perform pop-out float pressure cylinder hydrostatic test (per U.S. DOT-SP 10915).											●				
Pop-out float pressure cylinder maximum life.														●	

* One-time maintenance after new or overhauled main rotor gearbox is installed.

** Recurring inspection not to exceed given interval.

1-90 Helicopter Servicing

1-91 Scheduled Maintenance and Inspections

Required maintenance and inspection intervals are given in Table 1. Publications listed are subject to revision.

Also consult the following for specific applicability, as some aircraft may require maintenance and inspections in addition to the requirements in Table 1:

- Aircraft maintenance records
- Manufacturers' Service Bulletins (SBs)
- Aviation regulations
- Airworthiness Limitations
- Airworthiness Directives (ADs)

Preventive maintenance is required between scheduled inspections. Fluid leaks, discoloration, fretting, galling, chafing, nicks, scratches, dents, cracks, and corrosion all warrant further investigation. Unairworthy items must be replaced or repaired as allowed by RHC.

1-92 Additional Component Maintenance

> NOTE
>
> RHC-manufactured parts not listed in § 1-92 as requiring additional component maintenance, or replacement per § 4-30, are "on condition".

A. 12 YEARS

Remove the following components when they have accumulated 12 years time in service and less than 2000 hours time in service since new, since last overhaul, or since last 12-year maintenance, and perform action indicated:

Part Number	Description	Action
A120-5	Bellcrank – Aft	Replace with new.
A785-36	Hose (engine gearbox vent; earlier ships)	Install KI-258 Firewall Drain Tube Upgrade Kit.
A785-37	Hose (inducer bleed)	Replace with new.
A785-38	Hose (starter-generator)	Replace with new.
A918-1 thru -8, -19, & -20	Elastic Cord Assembly	Replace with new. Dash number is selected during flight test evaluation.
B173-5	V-Belt – Compressor Drive (cabin air conditioning)	Replace with new.
C005-4	Main Rotor Hub (C154-1) & Bearing Assembly	Perform inspection and repair per § 62-22, return to RHC for inspection and repair, or replace with new.
C005-13	Main Rotor Blade and Spindle Assembly	Submit to RHC-authorized component maintenance facility for 12-year maintenance, or replace with new or overhaul exchange. 12-year maintenance includes blade replacement, boot and o-ring replacement, spindle bearing replacement (as required), pitch horn screw replacement (as required), boot and o-ring replacement, and inspection.
C008-10	Tail Rotor Assembly	Replace with new.
C017-6	Swashplate Assembly	Perform 12-year inspection per § 5-52, or replace with new or overhaul exchange.
C021-1	Tail Rotor Gearbox Assembly	Replace input seal & o-ring, and output seal & o-ring, per § 65-40. During seal replacement, visually inspect exposed portion of bearings for corrosion; replace gearbox if corrosion is evident.
C031-1	Tail Rotor Pitch Control	Replace with new.
C258-1	Main Rotor Pitch Link Assembly	Replace with new C258-5 link assembly.
C258-5	Main Rotor Pitch Link Assembly	Perform inspection per § 5-51, or replace with new.

1-92 Additional Component Maintenance (continued)

A. 12 YEARS (continued)

Part Number	Description	Action
C343-8	Tube	Disassemble and visually inspect exterior and interior. Verify no corrosion.
D211-3	Hydraulic Reservoir Assembly	Perform 12-year inspection per § 5-54, or replace with new or overhaul exchange.
D212-5, -6	Hydraulic Servo Assembly	Perform inspection per § 29-30 Part C.
D918-1	Elastic Cord – Longitudinal (cyclic pivot)	Replace with new.
D918-2	Elastic Cord – Lateral (cyclic pivot)	Replace with new.
D918-3	Elastic Cord – (collective)	Replace with new.
F006-1, -6	Main Rotor Gearbox Assembly	Submit to RHC for 12-year maintenance, or replace with new or overhaul exchange. 12-year maintenance includes seal replacement, o-ring replacement, sealed bearing replacement, rubber mount replacement, R66 SL-11 upgrade (as applicable), and inspection.
F014	Landing Gear Assembly	Perform 12-year inspection per § 5-53, or replace with new.
F018-1	Clutch Assembly (Revision C & prior)	Replace with new or overhaul exchange clutch assembly.
F018-1	Clutch Assembly (Revision D & subsequent)	Submit to RHC for 12-year maintenance, or replace with new or overhaul exchange. 12-year maintenance includes seal replacement, o-ring replacement, and inspection.
F121-3, -5, & -7	Push-Pull Tube Assembly	Disassemble and visually inspect exterior and interior. Verify no corrosion.
F579-1	Engine Air Bellmouth	Replace with new.
F642-6	Engine Shaft Weldment	Replace with new F642-7 weldment.
F650-1, -2	Main Gearbox Mounting Bolts	Visually inspect exterior and interior. Verify no corrosion.
F651-2	Element – Main Gearbox Filter	Replace with new.
F651-3	Seal Kit – Main Gearbox Filter	Replace with new.
F771-1	Filter – Engine Air Intake (foam, standard)	Replace with new.
F771-4	Filter – Starter-Generator (cooling air)	Replace with new.
F771-7	Filter – G918-1 Box Assembly	Replace with new.
F792-1	Dual Tachometer	Perform accuracy check per § 95-23 Part D.
G201-1	Frame, Servo Support	Remove B163-2 rod end. Visually inspect exterior and interior. Verify no corrosion.

1-92 Additional Component Maintenance (continued)

B. 2000 HOURS

Remove the following components when they have accumulated 2000 hours time in service since new or since last overhaul, and perform action indicated:

Part Number	Description	Action
A120-5	Bellcrank – Aft	Replace with new.
A130-48	Spacer (at A462-4 fittings)	Replace with new.
A215-015	O-Ring (rollover valves)	Replace with new.
A462-4	Fitting – Control Cable	Replace with new.
A522-10	Control Cable (FCU fuel cutoff)	Replace with new, or replace inner wire.
A522-11	Control Cable (fuel valve)	Replace with new, or replace inner wire.
A522-14	Control Cable (heater valve)	Replace with new, or replace inner wire.
A729-68	Tube (black, earlier ships; used with G727-1 engine gearbox vent tube)	Replace with new.
A785-36	Hose (engine gearbox vent; earlier ships)	Install KI-258 Firewall Drain Tube Upgrade Kit.
A785-37	Hose (inducer bleed)	Replace with new.
A785-38	Hose (starter-generator)	Replace with new.
A918-1 thru -8, -19, or -20	Elastic Cord Assembly	Replace with new. Dash number is selected during flight test evaluation.
A947-2	Flex Plate Assembly (engine driveline)	Replace with new.
B173-5	V-Belt – Compressor Drive (cabin air conditioning)	Replace with new.
B277-32	Clamp (inducer bleed hose, at engine)	Replace with new.
C005-4	Main Rotor Hub (C154-1) & Bearing Assembly	Replace with new.
C005-13	Main Rotor Blade and Spindle Assembly	Replace with new or overhaul exchange C005-13 main rotor blade and spindle assembly.
C008-10	Tail Rotor Assembly	Replace with new.
C017-6	Swashplate Assembly	Submit to RHC-authorized component maintenance facility for overhaul, or replace with new or overhaul exchange.
C021-1	Tail Rotor Gearbox Assembly	Replace with new or overhaul exchange tail rotor gearbox assembly.
C031-1	Tail Rotor Pitch Control	Replace with new.
C119-2	Bumper – Tail Rotor	Replace with new.
C258-1	Main Rotor Pitch Link Assembly	Replace with new C258-5 link assembly.
C258-5	Main Rotor Pitch Link Assembly	Replace with new, or perform inspection per § 5-51 and magnetic particle inspect barrel.
C522-10	Control Cable (FCU throttle)	Replace with new.
C522-11	Control Cable (PTG)	Replace with new.

1-92 Additional Component Maintenance (continued)

B. 2000 HOURS (continued)

Part Number	Description	Action
C649-4	Oil Cooler (main rotor gearbox oil)	Replace with new, or overhaul oil cooler.
C947-3	Flex Plate Assembly (tail rotor driveline)	Replace with new.
D082-1	Tube Assembly (tail rotor guard mount)	Magnetic particle inspect or replace with new.
D211-3	Hydraulic Reservoir Assembly	Replace with new or overhaul exchange reservoir assembly.
D212-5	Hydraulic Servo Assembly	Replace with new or overhaul exchange servo assembly.
D212-6	Hydraulic Servo Assembly	Replace with new or overhaul exchange servo assembly.
D224-3 and -4	Tail Rotor Drive Shaft (D196-1) Assembly	Replace with new D224-4 tail rotor drive shaft assembly.
D333-13	Fitting (PTG)	Replace with new.
D500-2	Hydraulic Pump Assembly	Replace with new or overhaul exchange pump assembly.
D500-3	Main Rotor Gearbox Oil Pump Assembly	Replace with new or overhaul exchange pump assembly.
D918-1	Elastic Cord – Longitudinal (cyclic pivot)	Replace with new.
D918-2	Elastic Cord – Lateral (cyclic pivot)	Replace with new.
D918-3	Elastic Cord – (collective)	Replace with new.
D930-2	Spring – Safety (FCU throttle input)	Replace with new.
F006-1, -6	Main Rotor Gearbox Assembly	Replace with new or overhaul exchange F006-1 or F006-6 gearbox assembly, as required.
F018-1	Clutch Assembly	Replace with new or overhaul exchange clutch assembly.
F101-4	Rod End, Elastomeric	Replace with new.
F170-1, -2	Fitting (engine gearbox vent)	Replace with new F170-2 fitting.
F173-1	Strut (exhaust weldment support)	Replace with new.
F453-5	Retainer (at firewall seal)	Replace with new.
F579-1	Engine Air Bellmouth	Replace with new.
F597-1	Seal – Firewall	Replace with new.
F642-6, -7	Engine Shaft Weldment	Replace with new F642-7 weldment.
F649-1	Oil Cooler (engine oil)	Replace with new, or overhaul oil cooler.
F651-2	Element – Main Gearbox Filter	Replace with new.
F651-3	Seal Kit – Main Gearbox Filter	Replace with new.
F771-1	Filter – Engine Air Intake (foam, standard)	Replace with new.
F771-4	Filter – Starter-Generator (cooling air)	Replace with new.

1-92 Additional Component Maintenance (continued)

B. 2000 HOURS (continued)

Part Number	Description	Action
F771-7	Filter – G918-1 Box Assembly	Replace with new.
F792-1	Dual Tachometer	Replace with new.
G732-2	Cap (with C130-62 spacer)	Replace with G732-3 cap.
A880-908 or AN815-8D	Union – Engine Oil Outlet (replaces CV26-77 check valve on helicopter S/N 0222 and prior)	Replace with new.
A880-908 or AN815-8D	Union – Oil Tank Vent (at engine)	Replace with new.
A880-910 or AN815-10D	Union – Engine Oil Inlet	Replace with new.
MS16562-4	Spring Pin (at D333-13 fitting on PTG lever)	Replace with new.
MS29512-10	Packing (left rollover valve)	Replace with new.
NAS1149E0363R	Washer (at A462-4 fittings)	Replace with new.
NAS557-32A	Grommet – Firewall (engine drive shaft weldment)	Replace with new.
NAS6604-67	Bolt (clutch assembly)	Replace with new.

1-92 Additional Component Maintenance (continued)

C. Engine Maintenance

Refer to RR300 Operation and Maintenance Manual (OMM) for engine maintenance. Prepare engine for Rolls-Royce maintenance facility per § 71-11 as required.

D. Airframe and Engine Accessory Maintenance

Refer to accessory manufacturer's instructions for continued airworthiness for accessory maintenance. Remove accessories per R66 Maintenance Manual or RR300 Operation and Maintenance Manual (OMM) as applicable.

Intentionally Blank

CHAPTER 4

AIRWORTHINESS LIMITATIONS

Section	Title	Page
4-10	Life-Limited Components	4.1
4-11	Time-in-Service Records	4.1
4-12	Fatigue Life-Limited Parts	4.2
4-20	Type Certificate Data Sheet (TCDS)	4.2
4-30	Airworthiness Limitations	4.3

Intentionally Blank

CHAPTER 4

AIRWORTHINESS LIMITATIONS

4-10 Life-Limited Components

4-11 Time-In-Service Records

It is the operator's responsibility to maintain a record of time in service for the engine, airframe, and all life-limited components, as well as the number of start cycles for the engine. Two hourmeters are provided: the hourmeter on the console records all run time including ground idle and is provided for reference. The hourmeter located outboard of the pilot's seat is collective-activated and records run time only when the collective is raised off the down stop. Both hourmeters are connected to main rotor gearbox oil-pressure switch. The collective-activated hourmeter may be used to determine time in service for maintenance purposes, including time in service for all life-limited components.

Calendar time in service for the airframe and engine begins on the date of the original RHC-issued Export (or Standard) Certificate of Airworthiness for the helicopter. For spares without a storage limit specified in § 10-20, calendar time in service begins on the date of the RHC-issued Airworthiness Approval Tag (Authorized Release Certificate) issued with the invoice.

If a component or an inspection is scheduled for hourly and calendar intervals, comply with whichever requirement comes first, then reset interval unless otherwise specified.

Engine life is limited by engine time in service and accumulated start cycles. The engine is equipped with an electronic Engine Monitoring Unit (EMU), which may be used to verify time in service and accumulated start cycles. An official, independent record of start cycles must be maintained by the operator.

When installing a life-limited part or a part with an overhaul requirement, record in the helicopter maintenance record the installation date, part number, part name, serial number, helicopter total time, and time in service accumulated by part since new or since last overhaul, as applicable.

WARNING

Components with mandatory overhaul times or life-limits whose time in service is not reliably documented cannot be considered airworthy and must be removed from service.

4-12 Fatigue Life-Limited Parts

The Airworthiness Limitations Section (ref. § 4-30) lists the mandatory replacement schedule for fatigue life-limited parts.

If a part is fatigue life-limited or has a mandatory overhaul requirement and is interchanged between an R44 and an R66 helicopter, and if the part life-limit or overhaul requirement is different between an R44 and an R66 helicopter, the shorter life-limit or overhaul requirement must be used. If a part is fatigue life-limited or has a mandatory overhaul requirement, and the accumulated cycles and/or time in service are known but the helicopter type is unknown, the shorter life-limit or overhaul requirement must be used.

Listed items (ref. § 4-30) must be removed from the helicopter at the specified intervals and permanently retired from service, preferably by destroying or damaging each part so it cannot inadvertently be returned to service.

4-20 Type Certificate Data Sheet (TCDS)

TCDS R00015LA is available at FAA Dynamic Regulatory System website: https://drs.faa.gov.

4-30 Airworthiness Limitations

The Airworthiness Limitations Section is FAA approved and specifies inspections and other maintenance required under 14 CFR §§ 43.16 and 91.403, unless an alternative program has been FAA approved.

R66 Fatigue Life-Limited Parts

Part Number	Description	Maximum Service Life
C023-21, -24, -34, & -35	Tailcone Assembly, Rev AV & Prior	2000 Hours
C044-1 & -2	Horizontal Stabilizer	2000 Hours
C154-1	Main Rotor Hub	2000 Hours
C158-1	Main Rotor Spindle	2000 Hours
C251-3	Main Rotor Shaft, Rev T & Prior	2000 Hours
C545-1	Gear Set, Tail Gearbox	2000 Hours
C545-2	Pinion, Tail Gearbox	2000 Hours
C647-12	Bearing Set, Swashplate	2000 Hours
D079-1	Tail Rotor Guard, Rev P & Prior	2000 Hours
D196-1	Tail Rotor Drive Shaft, Rev H & Prior	2000 Hours
F016-2	Main Rotor Blade, Rev J & Prior	2000 Hours or 12 years[1]
F016-2	Main Rotor Blade, Rev K & Subsequent	2000 Hours or 15 years[1]
F020-1	Upper Frame, Rev G & Prior	2000 Hours
F029-1	Tail Rotor Blade, Rev H & Prior	2000 Hours or 12 years[1]
F029-1	Tail Rotor Blade, Rev I & Subsequent	2000 Hours or 15 years[1]
F029-2	Tail Rotor Blade	2000 Hours or 12 years[1]
F195-1	Yoke, Tail Rotor Drive Shaft	2000 Hours
F263-1	Housing, Main Gearbox, Rev H & Prior	2000 Hours
F270-1	Cartridge, Main Gearbox, Rev D & Prior	2000 Hours
G062-2	Tail Rotor Hub	2000 Hours
G201-1	Frame, Servo Support, Rev N & Prior	2000 Hours

[1] Whichever limit occurs first. Calendar time starts on date of original RHC-issued Airworthiness Approval.

(Continues)

4-30 Airworthiness Limitations (continued)

R66 Fatigue Life-Limited Parts (continued)

Part Number	Description	Maximum Service Life
C023-21, -24, -34, & -35	Tailcone Assembly, Rev AW & Subsequent	4000 Hours
C251-3	Main Rotor Shaft, Rev U & Subsequent	4000 Hours
D079-1	Tail Rotor Guard, Rev Q & Subsequent	4000 Hours
D196-1	Tail Rotor Drive Shaft, Rev I & Subsequent	4000 Hours
F020-1	Upper Frame, Rev H & Subsequent	4000 Hours
F050-2	Horizontal Stabilizer	4000 Hours
F143-1	Pinion, Main Gearbox	4000 Hours
F146-1	Pinion, Main Gearbox	4000 Hours
F235-13	Strut, Upper Frame	4000 Hours
F252-1	Strut, Upper Frame	4000 Hours
F263-1	Housing, Main Gearbox, Rev I & Subsequent	4000 Hours
F270-1	Cartridge, Main Gearbox, Rev E & Subsequent	4000 Hours
G201-1	Frame, Servo Support, Rev O & Subsequent	4000 Hours
G950-2	Stabilizer, Pop-out Floats	4000 Hours

Approved By: ERIC D SCHRIEBER Digitally signed by ERIC D SCHRIEBER Date: 2024.06.07 10:45:37 -07'00' Date: 07 Jun 2024

Manager, Federal Aviation Administration
West Certification Branch, AIR-770

FAA Approved: This and the previous page constitute the Airworthiness Limitations Section in its entirety, is considered segregated from the rest of the document, and sets forth the FAA-approved mandatory replacement times for fatigue life-limited parts.

CHAPTER 5

INSPECTIONS

Section	*Title*	*Page*
5-10	Introduction	5.1
5-20	[Reserved]	5.1
5-30	General Procedures	5.1
5-31	Ball and Roller Bearings	5.1
5-32	Push-Pull Tubes	5.3
5-33	Rod Ends and Spherical Bearings	5.3
5-34	Elastomeric Bearings	5.5
5-35	Telatemp Indicators	5.6
5-36	Torque Stripes	5.7
5-40	Operation Checks for 100-Hour/Annual Inspection	5.8
5-41	Ground Check	5.8
5-42	Run-Up	5.9B
5-43	Flight Check	5.11
5-45	100-Hour/Annual Inspection	5.13
5-50	2000-Hour/12-Year Inspection	5.39
5-51	C258-5 Main Rotor Pitch Link Assembly Inspection	5.39A
5-52	Swashplate Assembly 12-Year Inspection	5.39B
5-53	Landing Gear Assembly 12-Year Inspection	5.39C
5-54	Hydraulic Reservoir 12-Year Inspection	5.39D
5-60	Special Maintenance and Inspections	5.41
5-61	Tail Skid Strike	5.41
5-62	Tail Rotor Strike	5.42
5-63	Main Rotor Strike	5.43
5-64	Rotor/Engine Overspeed	5.44
5-65	Hard Landing	5.47
5-66	Dye Penetrant Inspection of F020-1 Upper Frame	5.48
5-67	Corrosion on F020-1 Upper Frame	5.48
5-68	Main Rotor Gearbox Overtemp Illumination	5.48
5-69	Main Rotor Gearbox (MR) Chip Light Illumination	5.49
5-70	Tail Rotor Gearbox (TR) Chip Light Illumination	5.49
5-71	Main Rotor Gearbox Filter Bypass Indicator	5.49
5-72	Lightning Strike	5.50
5-73	Pop-Out Float-Equipped Helicopter Water Landing with Tail Rotor Contact	5.50
5-74	Main Rotor Gearbox Internal Visual Inspection	5.51

CHAPTER 5

INSPECTIONS (Continued)

Section *Title* *Page*

5-75 Inspection After Stabilizer Damage 5.52

CHAPTER 5

INSPECTIONS

5-10 Introduction

The R66 helicopter must be inspected periodically to verify it is in airworthy condition. Required inspection intervals are maximum 100 hours time in service or 12 calendar months (annually), whichever occurs first; the inspection interval may be extended up to 10 hours, without accumulation, if allowed by local regulations. Fluid leaks, discoloration, dents, scratches, nicks, cracks, galling, chafing, fretting, and corrosion all warrant further investigation. Unairworthy items must be replaced or repaired as allowed by Robinson Helicopter Company. This section contains procedures for performing the required periodic airframe inspections.

5-20 [Reserved]

5-30 General Procedures

Unless otherwise specified, the following general procedures apply to R66 inspection. When required, magnetic particle inspection may be performed in accordance with ASTM E 1444 and MIL-STD-1907. Fluorescent penetrant inspection may be performed in accordance with ASTM E 1417 and MIL-STD-1907.

5-31 Ball and Roller Bearings

The first indication of bearing failure is usually an increase in bearing noise. Noise will almost always start several hours prior to bearing failure. Listen to drive system during start-up and shutdown. A failing bearing will produce a loud whine, rumble, growl, or siren sound. Upon hearing an unusual noise, thoroughly inspect all bearings before further flight.

A failing bearing may have a distorted seal or be exuding a large amount of grease. Monitor bearings for increase in temperature, but do not rely on Telatemps to detect failing bearings as temperature increase may occur only seconds before bearing disintegrates.

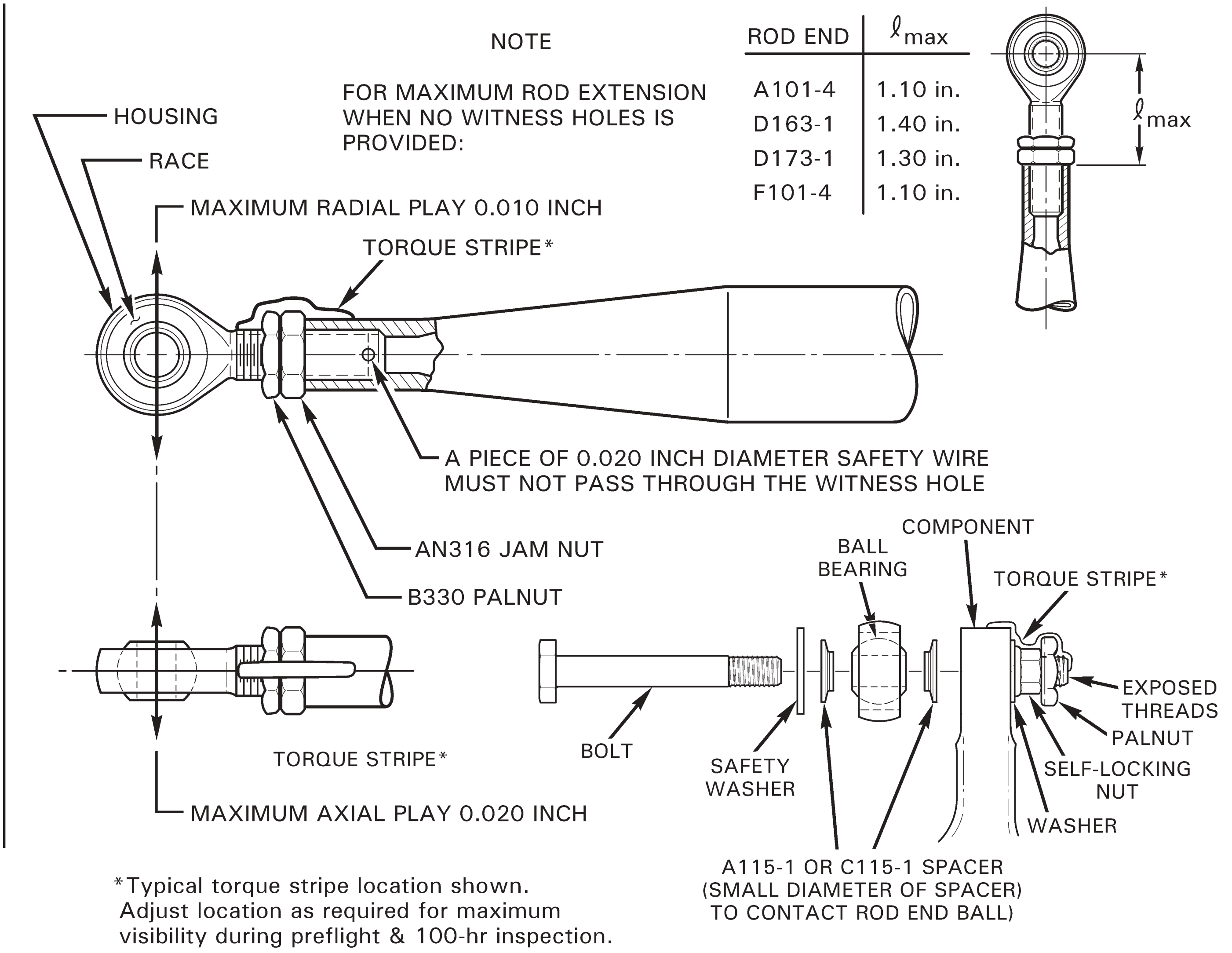

FIGURE 5-1 ROD END AND SPHERICAL BEARING PLAY LIMITS AND TORQUE STRIPE APPLICATION

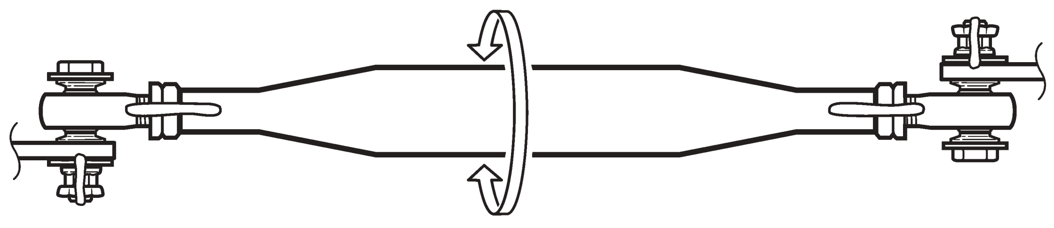

Position rod ends for maximum rotation

FIGURE 5-2 ROD END CENTERING

5-32 Push-Pull Tubes

1. Nicks, cuts, or scratches in tube not more than 0.010 inch deep and not more than 1/4 of tube circumference may be polished out in lengthwise direction using 320-grit or finer wet-or-dry abrasive paper to 1-inch minimum blend radius. Replace push-pull tube if depth exceeds these limits.
2. Replace push-pull tube if tube is dented or flattened more than 5% of its diameter in unswaged area; dents or flattening is not permitted in swaged (tapered and threaded) ends of tubes.

5-33 Rod Ends and Spherical Bearings

1. Maximum axial play: 0.020 inch (for A104-4 bearing only: 0.035 inch axial play)
   Maximum radial play: 0.010 inch
2. Looseness between spherical bearing outer race & rod end housing, or between spherical bearing outer race & part, is not permitted.
3. Rod ends not riveted in place must block passage of 0.020-inch diameter wire through witness hole. Refer to Figure 5-1 for maximum rod end extension when no witness hole is provided.
4. Rod end jam nuts and palnuts must be torqued per § 20-32 and torque striped per Figure 5-1 at the most visible position for pre-flight inspection. Torque stripe must extend across nuts to both rod end shank and push-pull tube (or pitch link barrel, yoke, support, strut, etc.). Torque stripes are subject to deterioration and must be periodically renewed.
5. Refer to Figure 5-2. Rod ends must be positioned (centered) to allow as much push-pull tube or link rotational movement as possible without binding.

CAUTION

Teflon-lined bearings must not be lubricated or solvent cleaned.

WARNING

Assembly of flight controls is critical and requires inspection by a qualified person. If a second person is not available, RHC recommends the installer take a 5-minute break prior to inspecting flight control connections the installer has assembled.

Elastomer Fatigue

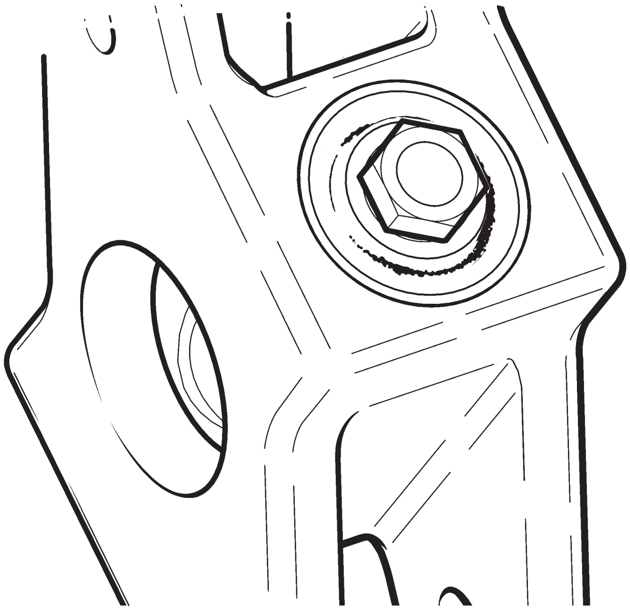

Elastomer Oil Contamination

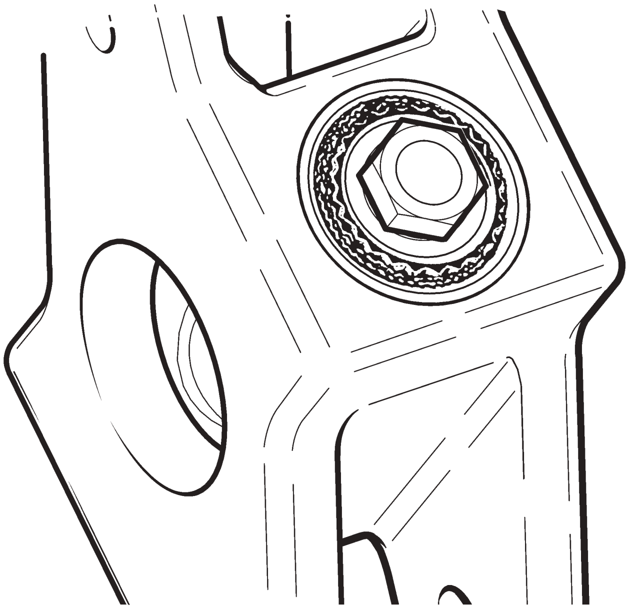

Elastomer Overload

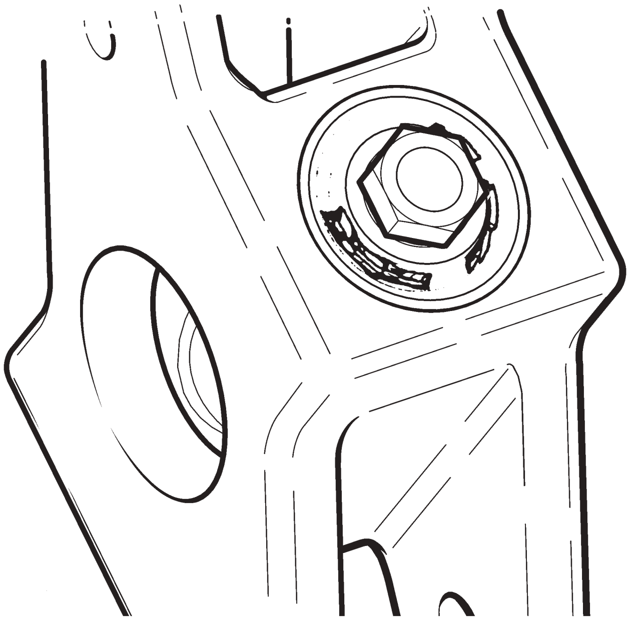

FIGURE 5-3 ELASTOMERIC BEARING DAMAGE

5-34 Elastomeric Bearings

Refer to Figure 5-3. Elastomeric bearings are used in the G062-1 tail rotor hub assembly. Fatigue, oil contamination, or overload can degrade the elastomer.

Small surface cracks (fatigue cracks) and elastomer dust or “eraser crumbs” are normal and are not cause for replacement. As cracks grow, enough elastomer will be lost to cause reduced stiffness and increased vibration. Replace bearing if crack is deeper than 0.10 inch or cracks are present over more than 25% of elastomer face.

Avoid elastomer exposure to oil, grease, hydraulic fluid, cleaning solvent, and rust-preventative fluids. Immediately wash off contaminants with detergent and water. Replace a contaminated bearing that exhibits swelling, wavy edges, or debonding.

Overload occurs when elastomer’s tensile strength or rubber-to-metal bond strength is exceeded. This can occur when normal loads are applied to a bearing weakened by fatigue or oil contamination. Overload is indicated by large clean cracks or extrusions from elastomer.

Elastomer may also separate (debond) from metal bushings. Replace bearing if separation exceeds 25% of bonded area.

5-35 Telatemp Indicators

Refer to Figure 5-4. Self-adhesive Telatemp indicators record increases in operating temperatures of the hydraulic pump and tail rotor gearbox. To use a Telatemp, draw a reference line between the highest temperature square which has darkened during normal operation and the next undarkened square. During every check thereafter, determine if an additional square has blackened. If an indicated temperature increase cannot be accounted for by a change in operating conditions, carefully examine the component before further flight.

> NOTE
>
> Telatemps can indicate erroneously if contaminated by a petroleum product, typically appearing as white, unactivated square(s) between darkened squares at each end; replace any Telatemp indicating as such and clean area with acetone prior to installing.

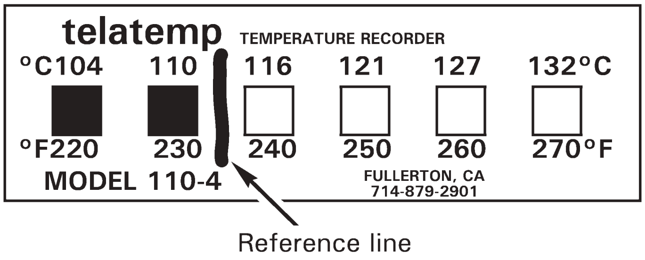

Part Number	Temperature Range		
F110-2	60°C / 140°F	—	88°C / 190°F
F110-3	82°C / 180°F	—	110°C / 230°F
F110-4	104°C / 220°F	—	132°C / 270°F

FIGURE 5-4 TELATEMP INDICATOR WITH DRAWN REFERENCE LINE

5-36 Torque Stripes

If, during inspection, the remaining torque stripe on a fastener is insufficient to determine joint integrity, then remove accompanying palnut as required and apply specified torque to fastener. If fastener moves, disassemble joint and inspect parts for damage such as fretting, thread deformation, hole elongation, etc.; replace damaged parts. If fastener does not move, install new palnut as required & standard torque per § 20-32. Torque stripe fastener per § 20-31.

5-40 Operation Checks for 100-Hour / Annual Inspection

Complete the following checklists in conjunction with 100-hour / annual inspection. Note and correct any discrepancies.

5-41 Ground Check (aircraft not running)

1. ______ **Twist Grip:**
Verify twist grip smooth rotation without binding in full up and full down collective position. Verify over center spring holds twist grip full open or closed.

2. ______ **Fuel Cutoff Valve:**
Verify smooth actuation without binding. Verify proper function of lock button.

3. ______ **Collective Control:**
Verify proper operation through full control travel with and without friction applied. With friction off, verify approximately one-half inch total free play before encountering hydraulic resistance. Verify normal hydraulic resistance throughout remainder of control travel. With friction on, verify increased resistance but no binding or locking of control. Verify power turbine governor rigging as follows:

   a. ______ Turn battery switch on. With collective full down, hold beep switch actuator all the way down. Have a second person verify the PTG reads approximately 45°.

   b. ______ With collective full down, hold beep switch actuator all the way up. Have a second person verify the PTG reads approximately 65°. Return actuator to nominal position. Turn battery switch off.

4. ______ **Cyclic Control:**
With friction off, verify approximately one-half inch total longitudinal and one inch total lateral free play before encountering hydraulic resistance. Verify normal hydraulic resistance throughout remainder of control travel. With friction on, verify increased resistance but no binding or locking of control.

5. ______ **Tail Rotor Pedals:**
Verify smooth actuation without binding. Verify proper pedal position for pilot and locking pin security.

6. ______ **Removable Controls (if installed):**
Verify proper operation and locking pin security.

5-41 Ground Check (continued)

7. ______ **Lighting, Instruments, and Audio Alerts:** (Turn battery switch on.)

ANNUNCIATOR PANEL AND ROTOR BRAKE LIGHTS

a. ______ MR TEMP PRESS segment illuminates.

b. ______ ENGINE OIL segment illuminates.

c. ______ GEN segment illuminates.

d. ______ LOW RPM segment illuminates.

e. ______ HYD segment illuminates (if hydraulic switch is OFF; later helicopters).

f. ______ COWL DOOR segment illuminates when fuel filler cowl door or baggage door is not closed. On later helicopters, the COWL DOOR segment also illuminates when an engine cowl door is not closed.

g. ______ ROTOR BRAKE segment illuminates (if rotor brake is applied).

h. ______ All annunciator panel segments illuminate when test button is depressed (segments below have additional behaviors):

i. ______ LOW FUEL and <12 GAL FUEL segments take approximately two seconds before they illuminate due to a time delay in circuit. If LOW FUEL segment illuminates immediately after test button depress, a fault is indicated.

ii. ______ EMU segment will illuminate only when test button is depressed. EMU segment takes approximately 10 seconds to perform self-test after battery is switched ON before it will illuminate.

INSPECTION LIGHTING

a. ______ Left side cowl door – verify LEDs illuminate main rotor gearbox and hydraulic reservoir sight gages when cowl door is open (battery switch on or off).

EXTERIOR LIGHTING

a. ______ Position lights – check function.

b. ______ Anti-collision light – check function.

c. ______ Landing lights – check function.

5-41 Ground Check (continued)

7. ______ **Lighting, Instruments, and Audio Alerts (continued):** (Turn battery switch on.)

INTERIOR LIGHTING

a. ______ Panel lighting & dimmer control – check function (position lights must be illuminated to enable panel lighting and dimmer control).

b. ______ Map light – check function.

c. ______ Digital voltmeter – indicates approximately 24 volts.

d. ______ Oil temperature gage – slight needle deflection with engine cold.

e. ______ Fuel quantity gage – indication of fuel level.

AUDIO ALERTS (Later helicopters; verify tone in headset)

a. ______ High rotor RPM: a high/low "warble" tone will sound when test button is depressed (five times per second).

b. ______ High engine torque/MGT: a beeping tone will sound when test button is depressed (four beeps per second for two seconds followed by 12 beeps per second).

(Turn battery switch off.)

8. ______ **Aircraft Documents:**

(Additional documents may be required in countries other than the US.)

a. ______ Inspect condition and verify R66 MT699-1 laminated pilot's checklist is current revision. Check revision status online at: www.robinsonheli.com.

b. ______ Inspect condition and verify R66 Pilot's Operating Handbook is current revision and contains correct Equipment List/Weight & Balance Data. Check revision status online at: www.robinsonheli.com.

c. ______ Verify airworthiness certificate onboard & matches helicopter S/N.

d. ______ Verify registration certificate onboard & matches helicopter S/N and all registration markings.

5-42 Run-Up

1. ______ Clean engine gas path, if required, per RR300 Series Operation and Maintenance Manual (OMM).

2. ______ Perform Pilot's Operating Handbook (POH) Section 4 “Preflight” checklist.

3. ______ Perform POH Section 4 “Before Starting Engine” checklist.

4. ______ Prior to start, verify rotor brake locks out starter.

5. ______ Prior to start, review the Cautions and Notes in POH Section 4 “Starting Engine and Run-Up”.

6. ______ Perform POH Section 4 “Starting Engine and Run-Up” checklist.

7. ______ Once stabilized idle is reached, disconnect ground power and switch generator ON. Verify ammeter shows non-zero generator load and GEN light out. Verify aircraft voltmeter reads 28.0 to 29.0 volts and calibrated voltmeter indicates 28.2 to 28.8 volts. When complete, disconnect calibrated voltmeter.

8. ______ Switch generator OFF. Verify GEN annunciator illuminates, voltmeter reading decreases but remains at or above 24 volts, and ammeter decreases to zero.

9. ______ Switch battery and generator OFF. Verify dual tachometer continues to function, then switch battery and generator back ON. Ensure avionics master switch is OFF, and depress annunciator panel Test button. Both sides of dual tachometer should drop to off-scale low indication while button is depressed.

10. ______ With avionics master switch OFF, verify generator continues to supply power with battery OFF (instruments continue to function, voltmeter reading remains steady), then switch battery back ON.

11. ______ Switch avionics master ON, and turn on avionics. Once avionics are on, verify avionics master controls power to all avionics by switching OFF then back ON.

12. ______ Perform annunciator panel test with avionics master ON. Verify all segments illuminate. Verify dual tachometer continues to function during test.

13. ______ Open collective twist grip (throttle) to flight position and allow RPM to stabilize. Set N2 RPM to 100%. N2 and rotor tach needles must be within 1% of point-to-point.

14. ______ Beep RPM full down and verify N2 RPM is 98% or lower. Attempt to beep RPM full up, but **DO NOT** exceed 105%. Verify N2 at full beep up is 102% to 104%. Beep N2 back to 100%.

5-42 Run-Up (continued)

15. ______ Transmit on 118.0, 125.0, and 135.0 MHz. Verify no variation in dual tachometer readings during transmission.

16. ______ Briefly operate the heater at 100% N2 to ensure system functions and is clear of debris.

17. ______ Check engine anti-ice system. Green anti-ice indicator should illuminate accompanied by small MGT increase when anti-ice is switched ON.

18. ______ Raise collective slightly, reduce N2 RPM slowly via twist grip. Verify low RPM horns and light activate at 95% to 94% and continue at all lower RPMs.

19. ______ Perform engine N1 DECELERATION CHECK per Section 4 of the Pilot's Operating Handbook. (With N2/R at 100% and N1 at 80%, N1 decel to 70% following rapid throttle closure should take at least 2 seconds.)

20. ______ Check hydraulic system operation. Using cyclic-mounted hydraulics switch, turn hydraulics OFF and verify HYD light on (if equipped). Using small longitudinal cyclic inputs, there should be approximately one-half inch of freeplay before encountering stiffness and feedback. Turn hydraulics ON. Controls should be free with no feedback or uncommanded motion. Pull hydraulic circuit breaker, and verify that hydraulics remain on regardless of cyclic hydraulic switch position. Reset system to breaker in, hydraulics switch ON.

21. ______ Air conditioning (if installed): Verify system blows cold air on both low and high settings. Verify no EMI/RFI with other instruments and systems. After a flight with air conditioning on, verify water drains from drain tube in ship's belly (may be little or no water in very dry conditions).

5-43 Flight Check

1. ______ **Hover:**

   a. ______ Verify normal gage indications.

   b. ______ Verify controllability in left and right pedal turns.

   c. ______ Verify hydraulic system zeros cyclic stick forces.

   d. ______ Evaluate vibration levels; if unacceptable, measure imbalance and correct.

2. ______ **Level Flight:**

   Conduct at typical cruise altitude (weather permitting) and maximum continuous torque. Loading to typical operating conditions or nominal weight and CG in middle of envelope will provide the most useful evaluation.

   a. ______ Verify tail rotor pedal position when yaw string is centered. Right pedal 0.25 to 0.75 inch forward of left pedal.

   b. ______ Verify tail rotor elastic trim cord zeros pedal forces (cord applies left pedal force).

   c. ______ Verify hydraulic system zeros cyclic stick forces and collective is balanced with no feedback.

   d. ______ Verify acceptable control forces (feedback) with hydraulics off.

   e. ______ Evaluate vibration levels; if unacceptable, measure imbalance and correct.

5-43 Flight Check (continued)

3. ______ **Power Assurance Check:**

Refer to R66 Pilot's Operating Handbook (POH) Chapter 5 power assurance chart. Conduct at typical cruise altitude (weather permitting) and maximum continuous torque (83%). Turn heater, generator, and anti-ice switches OFF. Stabilize N2/R at 100% (beep as required) and record the following values:

a. ______ N1

b. ______ % Torque (83% nominal)

c. ______ OAT

d. ______ MGT

e. ______ Pressure altitude

f. ______ Oil pressure

g. ______ Oil temperature

h. ______ Determine max allowable MGT from power assurance chart.

i. ______ Calculate margin. Margin = Max allowable MGT - Indicated MGT.

4. ______ **Shutdown:**

a. ______ Perform POH “Shutdown Procedure” checklist.

b. ______ Verify rotor brake function and ROTOR BRAKE annunciator segment illuminates.

5-45 100-Hour / Annual Maintenance and Inspection

RHC recommends retaining a copy of the most recently performed 100-hour / annual checklist with the aircraft's maintenance records to meet the requirement of 14 CFR § 91.417 (b)(1).

R66 Serial No.: __________________ Technician Name: ________________________

Registration No.: __________________

Collective-Activated (Time In Service) Hourmeter Indication: __________________ Technician Certificate Number: ________________________

Helicopter Total Time In Service: __________________

______ **Operation Checks:**
Perform ground and flight checks per § 5-40.

A. Preparation

______ **Cleaning (required by 14 CFR Part 43, Appendix D, paragraph (a)):**
Note any fluid leakage before cleaning. Clean main and tail rotor blades, hubs, and airframe exterior with a mild soap (pH between 7 & 9) and water solution per Chapter 20.

CAUTION

Do not spray main rotor hub, tail rotor gearbox vent, hydraulic reservoir vent, swashplate area, or bearing seals with high-pressure water or solvent as water or solvent may cause corrosion or breakdown of lubricants. See RR300 Series Operation and Maintenance Manual (OMM) for engine cleaning instructions and precautions.

______ **Access and Inspection Panels:**
Refer to R66 Illustrated Parts Catalog Chapter 6 for access and inspection panel locations. Remove or open necessary panels, doors, covers, fairings, and cowlings in accordance with 14 CFR Part 43, Appendix D, paragraph (a).

NOTE

If radio antennas are installed on removed panels, disconnect antenna lead and corresponding ground wire. Pull respective radio circuit breaker and tag circuit breaker with "Antenna Removed."

CAUTION

Instrument console removal (§ 95-50) is not required for scheduled inspections. Sufficient access for inspection is gained by removing the chin inspection panel, as well as removal of installed avionics, as required (refer to Chapter 97).

5-45 100-Hour / Annual Inspection (continued)

B. Inspection

CABIN FORWARD FOOTWELLS

______ **Tail Rotor Pedal Bearing Blocks:**
Remove pedal bearing block covers as required. Examine accessible portion with inspection light and mirror. Inspect condition. Check for looseness or play in pedal bearings. Maximum allowable play is 0.080 inch axially and 0.030 inch radially. Verify bearing block security.

______ **Adjustable Tail Rotor Pedals:**
Inspect condition. Verify no cracks in welds. Verify locking pins engage holes to secure adjustable pedals. Verify proper operating clearance. Verify no evidence of contact between outboard portion of lateral (torque) tube of RH pedal and under-floor longitudinal stiffener. Verify smooth actuation.

______ **Co-Pilot Removable Tail Rotor Pedals:**
Inspect condition. Verify no cracks in welds. Verify locking pins engage holes to secure removable pedals. Verify proper operating clearance and smooth actuation.

______ **Cabin Heater Diffusers:**
Inspect condition. Verify marking legibility. Verify no significant nicks, scratches or dents, or cracks in welds. Verify security.

______ **Fire Extinguisher and Mount:**
Inspect condition. Inspect fire extinguisher per manufacturer's instructions. Verify no loss of charge or obstructions in extinguisher nozzle. Verify security.

______ **Map Holders:**
Inspect condition. Verify no defects, tears, or material deterioration. Remove foreign objects and verify security.

______ **License Holder:**
Inspect condition. Verify no defects, cracks in plastic, or material deterioration. Verify security.

______ **Cabin Chin and Floor:**
Inspect condition. Verify equipment security. Retrieve and discard trapped debris.

CONSOLE

______ **Console Assembly:**
Inspect condition. Verify no significant nicks, scratches or dents; verify no cracks, corrosion, or loose rivets in lower console assembly. Verify hinge security.

______ **HID Landing Lights:**
Inspect condition. Verify proper installation and security of wiring and equipment.

5-45 100-Hour / Annual Inspection (continued)

CONSOLE (continued)

______ **Flight & Engine Instruments:**
Inspect condition. Verify proper instrument markings per R66 POH Section 2. Verify proper installation and security of wiring and equipment.

______ **Post Lights:**
Inspect condition. Verify proper function and equipment security.

______ **Fuel Cutoff Control and Guard:**
Inspect condition. Verify cable and mounting bezel security. Verify proper adjustment and smooth operation of knob. Verify guard is attached to console.

______ **Radios and Radio Trays:**
Inspect condition. Verify no cracks or corrosion. Verify proper installation and security of wiring and equipment.

______ **Pitot & Static Lines:**
Inspect pitot and static lines for obstructions, cracking, chafing, pinching or kinking. Verify integrity of pitot and static line connections. Verify line security.

______ **Tail Rotor Pedal Bearing Block Supports:**
Examine accessible portion with inspection light and mirror. Inspect both vertical sheet metal supports inside lower console and verify no cracks. Pay particular attention to area near NAS6603-13 bolts. Replace any cracked support prior to flight.

______ **Tail Rotor Controls:**
Examine accessible portion with inspection light and mirror. Inspect tail rotor control components for obvious defects. Verify operating clearance.

______ **Cabin Heater Hose:**
Inspect condition. Verify no collapsed areas or chafing. Verify hose clamp and hose security.

______ **Copper Bus Bars:**
Inspect condition. Verify no corrosion or bends in bus bar. Verify bus bar security and isolation from surrounding structure.

______ **Wiring:**
Inspect condition. Verify no loose, chafed, or broken wires or terminals. Verify neatness, proper routing and installation, and security.

______ **Fasteners & Torque Stripes:**
Inspect condition. Verify proper installation and security of fasteners. Renew deteriorated torque stripes per Figure 5-1.

______ **Close & Secure:**
Verify foreign objects are removed. Verify equipment security and cleanliness of interior. Close console and verify security.

5-45 100-Hour / Annual Inspection (continued)

PILOT-SIDE CONSOLE (Optional equipment)

______ **Pilot Avionics Support Weldment:**
Inspect condition. Verify no significant nicks, scratches, or dents on console shell. Verify no cracks in welds. Verify weldment mounting security.

CIRCUIT BREAKER PANEL

CAUTION

Ensure BATTERY switch is turned off while circuit breaker panel is open.

______ **Panel Cover:**
Inspect condition. Verify no damage to nutplates and rails in panel interior. Verify marking legibility.

______ **Fuses and Fuse Holders:**
Inspect condition. Verify security and no corrosion. Verify correct fuse installation.

______ **Circuit Breakers:**
Inspect condition. Check airworthiness directive applicability. Verify proper installation and security.

______ **Copper Bus Bars:**
Inspect condition. Verify no corrosion or bends in bus bars. Verify bus bar security and isolation from surrounding structure.

______ **Wiring:**
Inspect condition. Verify no loose, chafed, or broken wires or terminals. Verify neatness, proper routing and installation, and security.

______ **Fasteners & Torque Stripes:**
Inspect condition. Verify proper installation and security of fasteners. Renew deteriorated torque stripes per Figure 5-1.

______ **Close & Secure:**
Verify foreign objects are removed. Verify equipment security. Verify cleanliness of interior and of access cover. Close cover and verify security.

UNDER LEFT FRONT SEAT

______ **Lithium-Ion Battery Circuit Back-Up Batteries (required with optional Lithium-ion main battery):**
Inspect condition. Verify presence and proper orientation of (2) 9V back-up batteries. Verify security of battery trays and G468-1 mount assembly. Verify legibility of silkscreen lettering on mount. Inspect wiring for obvious damage.

5-45 100-Hour / Annual Inspection (continued)

HORIZONTAL CONTROL TUNNEL (Front seats)

______ **Covers:**
Inspect condition. Verify marking legibility.

______ **Antenna Wiring & Connectors:**
Inspect condition. Verify no loose, chafed, frayed, or broken wires. Verify no damaged connectors. Verify neatness, proper routing and installation, and security.

______ **Cyclic Box Assembly:**
Inspect condition. Verify no nicks, scratches, dents, cracks, corrosion, or loose rivets. Verify no distortion or damage on cyclic stop sheet metal assembly. Verify security.

______ **Cyclic Stick Assembly:**
Inspect condition. Verify no nicks, scratches, dents, cracks, or corrosion. Verify no cracks in welds. If paint has worn thru to metal, touch-up with § 20-75 approved primer. Verify security, proper operating clearance, and smooth actuation. Verify security of removable co-pilot grip and locking pin.

______ **Cyclic Boot:**
Inspect condition. Verify proper locking function of boot snaps. Verify no defects, tears, or material deterioration. Verify security.

______ **Cyclic Friction Assembly:**
Inspect condition. Inspect link rod end bearings per § 5-33. Verify no excessive flaring at either end of friction spacer. Verify proper installation, security, and operation.

______ **Cyclic Pivot:**
Inspect condition. Verify no nicks, scratches, dents, cracks, or corrosion. Inspect spherical bearings per § 5-33. Verify proper installation, security, and operating clearance.

______ **Cyclic Horizontal Torque Tube:**
Examine accessible portion with inspection light and mirror. Verify no nicks, scratches, dents, cracks, or corrosion. Verify no cracks around reinforcement blocks on both ends of torque tube. Verify proper installation, security, and operating clearance.

______ **Horizontal Push-Pull Tubes:**
Examine accessible portion with inspection light and mirror. Inspect condition per § 5-32. Verify no nicks, scratches, chafing, dents, cracks, or corrosion. Inspect rod end bearings per § 5-33; verify rod ends are centered and palnut and jam nut are tight. Check witness holes for proper thread engagement. Verify proper installation, security, and operating clearance.

5-45 100-Hour / Annual Inspection (continued)

HORIZONTAL CONTROL TUNNEL (Front seats; continued)

______ **Collective Stick Assembly:**
Inspect condition. Verify no nicks, scratches, dents, cracks, or corrosion. Verify no cracks in welds. Verify proper installation, security, and operation of collective micro switches. Verify security, proper operating clearance, and smooth actuation of both flight and throttle controls. Verify over center spring holds twist grip full open or full closed. Verify placard legibility.

______ **Collective Stick Torque Tube:**
Inspect condition. Verify no nicks, scratches, dents, cracks, or corrosion.

______ **Collective Boot:**
Inspect condition. Verify proper locking function of boot snaps. Verify ty-rap is properly installed (loosely securing boot around collective stick). Verify no defects, tears, or material deterioration. Verify security.

______ **Fuel Valve Knob and Guard:**
Inspect condition. Verify cable and mounting bezel security. Verify proper adjustment and smooth operation of valve. Verify guard is present.

______ **Collective Friction & Stop Assembly:**
Inspect condition. Verify no nicks, scratches, dents, cracks, or corrosion in stop assembly. Verify no bending or binding of stop through full control travel, with and without friction applied. Measure collective friction per § 67-22. Verify proper installation and security of collective friction lever and stop assembly.

______ **HeliSAS Autopilot (if installed):**
Inspect condition of associated equipment. Inspect wiring condition. Verify no loose, chafed, or broken wires or terminals. Verify neatness, proper routing and installation, and security.

______ **Co-Pilot Removable Collective Stick Assembly:**
Remove co-pilot collective stick assembly. Inspect condition. Verify no nicks, scratches, dents, cracks, or corrosion. Verify no damage to spring pin and safety wire at coupling. Firmly grasp coupling and rotate twist grip in each direction with opposite hand. Verify no free play of coupling or spacer relative to torque tube. Install removable collective stick in helicopter and verify both locking pins engage holes to secure stick. Verify security, proper operating clearance, and smooth actuation of both flight and throttle controls. Verify placard legibility.

______ **Co-Pilot Removable Collective Boot:**
Inspect condition. Verify proper locking function of boot snaps. Verify ty-rap is properly installed (loosely securing boot around collective stick). Verify no defects, tears, or material deterioration. Verify security.

5-45 100-Hour / Annual Inspection (continued)

HORIZONTAL CONTROL TUNNEL (Front seats; continued)

______ **Pitot & Static Lines & Drains:**
Inspect pitot and static lines for obstructions, cracking, chafing, pinching, or kinking. Remove drain plugs from tee fittings in each line and clear any moisture from system. Install drain plugs. Verify integrity of pitot and static line connections. Verify line security.

______ **Wiring:**
Inspect condition. Verify no loose, chafed, or broken wires or terminals. Verify neatness, proper routing and installation, and security.

______ **Fasteners & Torque Stripes:**
Inspect condition. Verify proper installation and security of fasteners. Renew deteriorated torque stripes per Figure 5-1.

______ **Antennas:**
Inspect condition. Verify no cracks where antennas mount to cowling. Verify security.

______ **Close & Secure:**
Verify foreign objects are removed. Verify equipment security. Verify cleanliness of interior and of inspection and access covers and cowlings. Connect ELT (if installed) wiring at connectors and anti-ice switch wiring terminals under cyclic box cover. Connect antenna leads and ground wires (if installed). Install covers and cowlings removed in preceding steps. Verify security. Verify security of removable and adjustable controls. Fasten cyclic, collective, and removable collective boot snaps.

5-45 100-Hour / Annual Inspection (continued)

HORIZONTAL CONTROL TUNNEL (Aft seats)

______ **Covers:**
Inspect condition. Verify marking legibility.

______ **Antenna Wiring & Connectors:**
Inspect condition. Verify no loose, chafed, frayed, or broken wires. Verify no damaged connectors. Verify neatness, proper routing and installation, and security.

______ **Cyclic Yoke:**
Inspect condition. Verify no cracks, corrosion, or fretting. Inspect spherical bearings per § 5-33. Verify proper installation, security, and operating clearance.

______ **Cyclic Fork:**
Inspect condition. Verify no nicks, scratches, dents, cracks, or corrosion. Inspect rod end bearings per § 5-33. Verify proper installation, security, and operating clearance.

______ **Cyclic Horizontal Torque Tube:**
Examine accessible portion with inspection light and mirror. Verify no nicks, scratches, dents, cracks, or corrosion. Verify no cracks around reinforcement blocks on both ends of torque tube. Verify proper installation, security, and operating clearance.

______ **Horizontal Push-Pull Tubes:**
Examine accessible portion with inspection light and mirror. Inspect condition per § 5-32. Verify no nicks, scratches, chafing, dents, cracks, or corrosion. Inspect rod end bearings per § 5-33; verify rod ends are centered and palnut and jam nut are tight. Check witness holes for proper thread engagement. Verify proper installation, security, and operating clearance.

5-45 100-Hour / Annual Inspection (continued)

HORIZONTAL CONTROL TUNNEL (Aft seats; continued)

______ **Fuel Cutoff and Throttle Control:**
Inspect condition. Verify proper fuel cutoff and throttle control clearance to installed equipment and surrounding structure. Verify proper installation and security.

______ **Cabin Heater Valve and Control:**
Inspect condition. Verify control clearance to installed equipment and surrounding structure. Verify heater valve security. Verify proper installation and smooth operation of valve.

______ **Flight Control Bellcranks:**
Inspect condition. Verify no nicks, scratches, dents, cracks, or corrosion. Inspect spherical bearings per § 5-33. Verify proper installation, security, and operating clearance.

______ **Bellcrank Support:**
Inspect condition. Verify no cracks or corrosion in welds. Verify no cracks where support mounts to keel panels. Verify proper installation and security.

______ **Evaporator and Blower Assembly (Air Conditioning; if installed):**
Remove middle seat assembly and cover, and inspect condition. Verify refrigerant line security, no damage, and clearance to adjacent structure. Verify no loose, chafed, frayed, or broken wires. Verify proper installation and security of blower and evaporator components.

______ **Evaporator Drain Tubes and Valve (Air Conditioning; if installed):**
Remove middle seat assembly and cover, and covers inside left and right seat compartments to access drain system. Verify tubes are unobstructed. Function-check drain system by simultaneously squeezing drain tube and sediment tube near tee-fitting and verify check-valve ball moves up momentarily.

VERTICAL CONTROL TUNNEL

______ **Vertical Push-Pull Tubes:**
Examine accessible portion with inspection light and mirror. Inspect condition per § 5-32. Verify no nicks, scratches, chafing, dents, cracks, or corrosion. Inspect rod end bearings per § 5-33; verify rod ends are centered and palnut and jam nut are tight. Check witness holes for proper thread engagement. Verify proper installation, security, and operating clearance.

______ **Beep Switch Actuator:**
Inspect condition. Verify proper control clearance to installed equipment and surrounding structure. Verify proper actuator installation, security, and operation.

______ **Tunnel Interior:**
Verify general cleanliness of tunnel interior. Inspect for fluid leaks or seepage; investigate cause and correct.

______ **Seat Backs:**
Inspect condition. Verify upholstery cleanliness and security.

5-45 100-Hour / Annual Inspection (continued)

CABIN BULKHEAD

______ **Blind Encoder & Engine Monitoring Unit (EMU):**
Inspect condition. Inspect wiring for obvious damage. Verify no cracks where units mount to bulkhead. Verify proper installation and security. Download EMU data as required per RR300 Series OMM.

______ **Fuse Block and Fuses (Air Conditioning; if installed):**
Inspect condition. Verify no corrosion. Verify correct fuse amperage and security.

______ **Antenna Wiring:**
Inspect condition. Verify no loose, chafed, frayed, or broken wires. Verify neatness, proper routing and installation, and security. Check grommets for proper installation.

______ **Pitot & Static Lines:**
Inspect pitot and static lines for obstructions, cracking, chafing, pinching, or kinking. Verify integrity of pitot and static line connections. Verify line security.

______ **Seat Back Interior:**
Verify general cleanliness of seat back interior. Inspect for fluid leaks or seepage; investigate cause and correct.

______ **Fuel Flow Meter Adapter (if installed):**
Refer to § 28-23. Visually inspect adapter for any obvious damage; verify proper installation and security. Inspect wiring for loose, chafed, frayed, or broken wires. Verify no damaged connectors. Verify wiring neatness, proper routing and installation, and security.

______ **Cabin Bulkhead:**
Examine accessible portion with inspection light and mirror. Verify no nicks, scratches, dents, cracks, corrosion, or loose rivets. Verify stiffener security. Verify upholstery cleanliness and security.

______ **Wiring:**
Inspect condition. Verify no loose, chafed, or broken, wires or terminals. Verify neatness, proper routing and installation, and security.

______ **Fasteners & Torque Stripes:**
Inspect condition. Verify proper installation and security of fasteners. Renew deteriorated torque stripes per Figure 5-1.

______ **Antennas:**
Inspect condition. Verify no cracks where antennas mount to cowlings. Verify security.

______ **Close & Secure:**
Verify foreign objects are removed. Verify equipment security. Verify cleanliness of interior and of inspection and access covers and cowlings. Connect antenna leads and ground wires (if installed). Install covers and cowlings removed in preceding steps. Verify security.

5-45 100-Hour / Annual Inspection (continued)

BAGGAGE COMPARTMENT

______ **Door:**
Inspect condition. Verify proper operation of micro switch and COWL DOOR warning segment. Inspect hinges and latches for obvious defects. Verify security and proper latching/locking function.

______ **Carpet:**
Inspect condition. Verify no defects, tears, or material deterioration. Verify proper installation and security.

______ **Interior:**
Inspect condition. Verify no structural damage. Verify general cleanliness of baggage compartment. Verify any installed equipment or passenger cargo are secure.

______ **Generator Control Unit (GCU) & Wiring:**
Inspect condition. Verify no exposed, loose, chafed, or broken, wires & terminals. Verify proper installation and security of wiring covers and Generator Control Unit (GCU).

BATTERY

______ **Lead-Acid Battery Installations:**
Inspect condition. Verify no cracks or corrosion on or near battery cable terminals. As required, perform capacity test or replace battery per manufacturer's instructions. Verify battery cable security. Verify no corrosion in surrounding structure.

______ **Lithium-Ion Battery Installation (if equipped):**
Refer to § 96-12. Inspect condition. Verify no cracks or corrosion on or near battery terminals. Verify vent hose, comm connector wiring, and battery cable security. Replace both 9v back-up batteries under LH front seat. Perform scheduled maintenance as required. Verify no corrosion in surrounding structure.

AUX FUEL SYSTEM (If equipped)

______ **Placards:**
Verify placard legibility, proper installation, and security.

______ **Aux Fuel Tank:**
Examine accessible portion with inspection light and mirror. Inspect condition of exterior and verify no leakage. Check bladder interior for foreign objects or debris. Verify security.

______ **Aux Fuel Tank Support:**
Examine accessible portion with inspection light and mirror. Inspect condition of exterior; verify no cracks or obvious damage. Verify security.

______ **Aux Fuel Hoses:**
Inspect condition. Verify no leakage, chafing, or obvious damage to fuel lines. Verify line clearance to installed equipment and surrounding structure. Verify security.

5-45 100-Hour / Annual Inspection (continued)

AUX FUEL SYSTEM (If equipped; continued)

______ **Aux Fuel Gage Sender & Wiring:**
Inspect condition. Verify no loose, chafed, or broken wires or terminals. Verify proper installation and security of sender and wiring.

______ **Aux Fuel Pump Wiring:**
Inspect condition. Verify no loose, chafed, or broken wires. Verify proper installation and security of wiring.

______ **Aux Fuel Cap:**
Inspect condition. Verify no damage or deterioration of gasket. Install cap and verify proper locking function. Verify security.

______ **Aux Fuel Tank Sump Drain:**
Inspect condition. Verify drain valve opens easily, drains fuel freely, springs closed, and seals completely. Inspect drain hose assembly for defects, tears, or material deterioration. Secure hose at tab near drain valve.

______ **MT183-1 Tool Kit:**
Inspect condition. Remove kit and verify kit contains loose parts listed in R66 Illustrated Parts Catalog. Clip kit to aux tank and verify security.

PRESSURE FUELING SYSTEM (If equipped)

______ **Pressure Fueling System (optional):**
Perform scheduled inspections per § 28-67 Part A.

Intentionally Blank

5-45 100-Hour / Annual Inspection (continued)

MAIN ROTOR GEARBOX COMPARTMENT

______ **Cowling Doors:**
Inspect condition. Verify proper operation of fasteners.

______ **Antenna Wiring & Connectors:**
Inspect condition. Verify no loose, chafed, frayed, or broken wires. Verify no damaged connectors. Verify neatness, proper routing and installation, and security. Check grommets for proper installation.

______ **Placards:**
Verify placard legibility, proper installation, and security. Refer to Chapter 11.

______ **Fuel Tank:**
Examine accessible portion with inspection light and mirror. Inspect condition of exterior and verify no leakage. Check bladder interior for foreign objects or debris. Verify security.

______ **Fuel Gage Sender & Wiring:**
Inspect condition. Verify no loose, chafed, or broken, wires or terminals. Verify proper installation and security of sender and wiring.

______ **Low-Fuel Switch Assembly Warning:**
Turn battery switch on. With a clean wooden dowel, gently depress low-fuel sender float in fuel bladder and verify LOW FUEL warning segment illuminates after approximate 1-second delay. Turn battery switch off.

______ **Fuel Cap:**
Inspect condition. Verify no damage or deterioration of gasket. Install cap and verify proper locking function. Verify security.

5-45 100-Hour / Annual Inspection (continued)

MAIN ROTOR GEARBOX COMPARTMENT (continued)

______ **Fuel Tank Rollover Vents:**
Inspect condition. Inspect Tygon® tube for defects, tears, or material deterioration. Verify proper safety wire installation and security. Verify 0.25 inch minimum clearance between cable assembly and vent assembly Tygon® tube; adjust cable as required. Verify no obstructions in vents.

______ **Fuel Tank Sump Drain:**
Inspect condition. Verify drain valve opens easily, drains fuel freely, springs closed, and seals completely. Inspect drain tube and clamp for defects, tears, or material deterioration. Clear fuel from drain tube and install clamp.

______ **Fuel Valve:**
Inspect condition. Verify cable and component security. Verify proper installation and (smooth) operation of valve.

______ **Cabin Bulkhead:**
Inspect condition. Verify no deformation, buckling, wrinkling, nicks, scratches, dents, cracks, corrosion, fretting, or loose rivets. Verify no leakage from fuel tanks. Verify security.

______ **Main Rotor Gearbox:**
Inspect condition. Verify no damage, material deterioration, or deformation of gearbox mounts. Verify no leakage at mast tube-to-gearbox attachment. Inspect mast tube for cracks. With ship on level ground, verify correct oil level and cleanliness through sight gage and adjust or flush as required. Verify security of Hall Effect senders and yoke magnets. Inspect oil lines for leakage, chafing, or obvious damage. Inspect oil pump mounting and fittings for leaking or obvious damage. Inspect gearbox oil filter for leakage or for tripped bypass indicator. Verify oil system proper installation and security.

> NOTE
>
> At 600 hours time in service or annually, whichever occurs first, remove chip detector and clean any varnish accumulation from detector's magnetic probe and adjacent metal body using a toothbrush and approved solvent per **§** 12-13 Part B. Service gearbox, change oil and filter, and clean chip detector at intervals recommended in § 1-90.

______ **Rotor Brake:**
Inspect condition. Verify integrity of brake pads and 0.030 inch minimum pad thickness. Verify brake pads are clear of engine shaft with brake released. Inspect micro switches for cracks. Verify no loose, chafed, or broken wires or terminals. Verify security. Inspect both pulleys (one at end of lever, one next to fuel tank) for cracks. Verify no frayed strands or binding of rotor brake activating cable. Verify proper routing and installation, security, and operation of brake and brake micro switch.

5-45 100-Hour / Annual Inspection (continued)

MAIN ROTOR GEARBOX COMPARTMENT (continued)

______ **Hydraulic Servo Support Frame:**
Inspect condition. Inspect rod ends per § 5-33. Use an inspection light and mirror to inspect all parts of each weld. Verify no cracks or corrosion in servo support. Verify proper installation and security.

______ **Jackshaft:**
Inspect condition. Verify no cracks or corrosion in welded assembly. Inspect jackshaft to vertical push-pull tube attachment. Inspect jackshaft aft support frame attachment and forward attachment rod end per § 5-33. Inspect C343-8 tube and rod ends linking jackshaft to aft servo. Verify security and proper operating clearance.

______ **Main Rotor Push-Pull Tubes:**
Examine accessible portion with inspection light and mirror. Inspect condition per § 5-32. Verify no nicks, scratches, chafing, dents, cracks or corrosion. Inspect rod end bearings per Section 5-33; verify rod ends are centered and palnut and jam nut are tight. Check witness holes for proper thread engagement. Verify proper installation, security, and operating clearance.

______ **Tail Rotor Push-Pull Tube & Forward Bellcrank:**
Examine accessible portion with inspection light and mirror. Inspect condition per § 5-32. Verify no nicks, scratches, chafing, dents, cracks, or corrosion. Inspect rod end bearings per § 5-33; verify rod ends are centered and palnut and jam nut are tight. Check witness holes for proper thread engagement. Inspect bellcrank and bellcrank sheet metal mounting for nicks, scratches, dents, cracks, or corrosion. Inspect spherical bearings per § 5-33. Verify proper installation, security, and operating clearance.

______ **Hydraulic Reservoir:**
Inspect condition. Verify no significant leakage. Replace filter and packing at intervals specified in § 1-90. Drain and flush hydraulic system per § 12-33 if oil has turned dark or emits bad odor. Add fluid as required. Verify security.

CAUTION

Cleanliness of hydraulic fluid is vital to proper system operation. Service hydraulic system with clean fluid from sealed containers. Verify funnels, tubing, and other service tooling is free of contaminants.

5-45 100-Hour / Annual Inspection (continued)

MAIN ROTOR GEARBOX COMPARTMENT (continued)

______ **Hydraulic Servos:**

Inspect condition. Inspect rod ends per § 5-33. Verify approximately 0.040 inch total free play at servo valve input. Hydraulic fluid seepage is permissible ("seepage" is evidence of fluids without flow, drips, or runs) provided fluid does not contaminate MRGB rubber mounts. Clean servo input rod end/clevis area with no-residue, non-alcoholic solvent as required. Verify no obvious defects and security of scissors at upper clevis of servos. Verify proper installation and clearance from surrounding structure through full control travel.

CAUTION

Use LPS PreSolve to clean hydraulic parts. Do not use alcohol.

______ **Hydraulic Hoses, Lines, & Fittings:**

Inspect condition. Verify no leakage, chafing, or obvious damage to hydraulic lines. Verify integrity of connections. Verify fluid line clearance to installed equipment and surrounding structure and sufficient fluid hose slack available through full control travel. Verify proper installation and security.

______ **Hydraulic Pump:**

Inspect condition. Inspect Telatemp per § 5-35. Verify no significant leakage. Verify proper installation and security.

______ **Upper Steel Tube Frame:**

Inspect condition. Verify no nicks, scratches, dents, cracks, or corrosion. Verify no chafing where wires, hoses, or clamps attach to frame. Examine each weld for cracks with an inspection light and mirror.

CAUTION

Upper steel tube frame is fatigue loaded and therefore susceptible to fatigue cracks. Inspect all joints thoroughly.

______ **F908-1 (Tail Rotor Drive) Yoke Assembly:**

Inspect condition. Verify no cracks, corrosion, or fretting. Verify proper installation, security, and operating clearance. Verify security of magnets.

______ **G779-1 Pulley (Air Conditioning; if installed):**

Inspect condition. Verify no cracks, corrosion, or fretting. Verify no nicks or sharp edges in fins that could damage v-belt. Verify proper installation, security, and operating clearance.

______ **V-Belt (Air Conditioning; if installed):**

Inspect condition. Replace belt if exhibiting frayed edges, excessive cracking, heat damage, or rubber deterioration. Verify 4.5–5.5 lb of force applied mid-span deflects belt 0.16-inch; adjust as required per § 21-21.

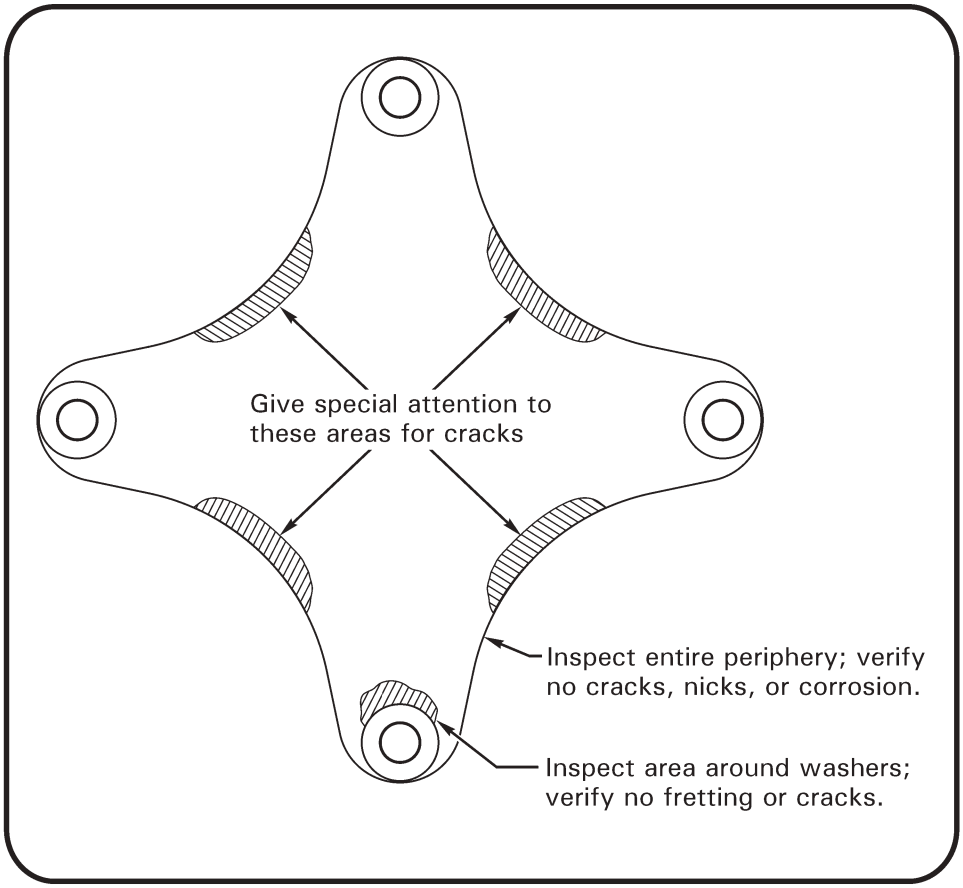

FIGURE 5-4A FLEX PLATE INSPECTION

5-45 100-Hour / Annual Inspection (continued)

MAIN ROTOR GEARBOX COMPARTMENT (continued)

______ **Compressor Assembly (Air Conditioning; if installed):**
Inspect condition, including integrity of belt-tension slotted plate. Verify security of mounting. Verify no loose, chafed, frayed, or broken wires. Verify proper installation and security of pressure switches, snubber, and refrigerant lines.

______ **Refrigerant Hose Assemblies (Air Conditioning; if installed):**
Verify security, no damage, and clearance to adjacent structure. Verify dust caps installed on service fittings where lines mount to compressor.

______ **F196-1 (Tail Rotor Drive) Fan Shaft:**
Inspect condition. Verify no shaft corrosion. Remove any light surface corrosion and apply wax or suitable corrosion inhibitor. Verify no cracks, corrosion, or fretting in fore and aft weldment. Verify proper installation, security, and operating clearance.

5-45 100-Hour / Annual Inspection (continued)

MAIN ROTOR GEARBOX COMPARTMENT (continued)

_____ **C947-3 (Tail Rotor Drive) Plate Assemblies, Forward and Intermediate:**
Refer to Figure 5-4A. Inspect condition. Verify no distortion, nicks, scratches, cracks, corrosion, or fretting. If fretting is detected, contact RHC Technical Support. Verify bonded washers are installed on both sides of each flex plate ear. Verify proper installation, security, and operating clearance.

_____ **Fanwheel Assembly and Scroll Assembly:**
Clean fanwheel blades and inspect condition. Verify no cracks, corrosion, or obvious damage on blade leading edges or fan assembly. Verify 0.10 inch minimum gap between G174-1 fanwheel assembly and forward and aft F305-5 inlets. Check gap all the way around; rotate fanwheel and check gap again (several positions). If gap does not meet minimum limit, trim inlets per § 79-11. Verify proper installation, security, and operating clearance. Verify no cracks or damage to scroll assembly.

_____ **Emergency Locator Transmitter (ELT; if installed):**
In accordance with local regulation, test per ELT manufacturer instructions. If 406 Mhz ELT, confirm programming tag matches helicopter registration. If RHC installation, inspect condition of both primary hook & loop strap and secondary buckle strap; replace strap(s) if damaged or deteriorated. Verify ELT security and clearance to drive train.

_____ **Pitot Line & Static Vent:**
Inspect pitot and static lines for obstructions, cracking, chafing, pinching or kinking. Verify integrity of pitot and static line connections. Verify line security.

_____ **Horizontal Firewall:**
Inspect condition. Verify no deformation, buckling, wrinkling, nicks, scratches, dents, cracks, corrosion, fretting, or loose rivets. Verify no leakage from fuel tanks.

_____ **Wiring:**
Inspect condition. Verify no loose, chafed, or broken wires or terminals. Verify neatness, proper routing and installation, and security.

_____ **Fasteners & Torque Stripes:**
Inspect condition. Verify proper installation and security of fasteners. Renew deteriorated torque stripes per Figure 5-1.

_____ **Antennas:**
Inspect condition. Verify no cracks where antennas mount to cowling. Verify security.

_____ **Cowling Doors:**
Inspect condition. Verify proper operation of fasteners.

_____ **F910-1 (Main Rotor Drive) Yoke:**
Inspect condition. Verify no cracks, corrosion, or fretting. Verify proper installation, security, and operating clearance.

5-45 100-Hour / Annual Inspection (continued)

MAIN ROTOR GEARBOX COMPARTMENT (continued)

______ **A947-2 (Main Rotor Drive) Plate Assemblies:**
Refer to Figure 5-4A. Inspect condition. Verify no distortion, nicks, scratches, cracks, corrosion, or fretting. If fretting is detected, contact RHC Technical Support. Verify bonded washers are installed on both sides of each flex plate ear. Verify proper installation, security, and operating clearance.

______ **F642 (Engine) Shaft Weldment:**
Inspect condition. Verify 0.2 inch minimum clearance between shaft weldment and firewall grommet; verify equal gap concentrically between shaft and box assembly hole edges. Adjust F174-1 support weldment rod ends per § 53-31 as required. Rotate shaft and verify no cracks, corrosion, or fretting. Verify proper installation, security, and operating clearance.

______ **Engine Firewall:**
Inspect condition. Verify no deformation, buckling, wrinkling, nicks, scratches, dents, cracks, corrosion, fretting, or loose rivets. Verify no leakage from fuel tanks.

______ **Engine Oil Tank:**
Inspect condition. Verify no leakage or obvious damage to oil tank exterior. Check tank interior for foreign objects. Add oil as required per R66 POH Section 8. Verify tank security.

______ **Tailcone Attachment:**
Inspect condition. Verify no cracks near fasteners attaching tailcone to upper frame. Verify proper installation and security.

______ **Upper Steel Tube Frame:**
Inspect condition. Verify no nicks, scratches, dents, cracks, or corrosion. Verify no chafing where wires, hoses, or clamps attach to frame. Examine each weld for cracks with an inspection light and mirror.

CAUTION

Upper steel tube frame is fatigue loaded and therefore susceptible to fatigue cracks. Inspect all joints thoroughly.

______ **Antenna Wiring & Connectors:**
Inspect condition. Verify no loose, chafed, frayed, or broken wires. Verify no damaged connectors. Verify neatness, proper routing and installation, and security. Check grommets for proper installation.

______ **Fasteners & Torque Stripes:**
Inspect condition. Verify proper installation and security of fasteners. Renew deteriorated torque stripes per Figure 5-1.

5-45 100-Hour / Annual Inspection (continued)

MAIN ROTOR GEARBOX COMPARTMENT (continued)

______ **Antennas:**
Inspect condition. Verify no cracks where antennas mount to cowling. Verify security.

______ **Close & Secure:**
Verify foreign objects are removed. Verify equipment security. Verify cleanliness of interior and of inspection and access doors and cowlings. Connect antenna leads and ground wires, if installed. Install/close doors and cowlings removed in preceding steps. Verify security.

Intentionally Blank

5-45 100-Hour / Annual Inspection (continued)

ENGINE

Refer to RR300 Series OMM, and applicable engine component manufacturer's maintenance publications for service and inspection procedures.

Additional service and inspection intervals are specified in § 1-90.

NOTE
For engine-related matters, if there is a conflict between this manual and Rolls-Royce instructions, Rolls-Royce instructions take precedence. Notify RHC of discrepancy.

______ **Inlet Plenum and Filter Bypass Indication:**
Inspect plenum condition. Verify no foreign object debris or loose items. Turn battery switch on. Verify annunciator panel warning segment illuminates when bypass doors are opened individually, then simultaneously. Turn battery switch off.

______ **Standard (Foam) Air Filter Assembly:**
Inspect condition. Verify no tears, punctures, or damage to filter media or cage assembly; verify no corrosion, cracks, or distortion to filter assembly components. Service filter as required per § 71-21, Part D. Verify proper installation and security.

______ **Inlet Barrier Filter (if installed):**
Inspect condition. Verify no tears, punctures, or damage to filter media or cage assembly; verify no corrosion, cracks, or distortion to filter assembly components. Service or replace filter assemblies as required per § 71-21, Part E. Note indication on filter maintenance aid. Verify proper installation and security.

______ **Engine Hoses:**
Inspect condition. Verify no rips, holes, or collapsed areas (gently squeeze hose with finger tips). Verify proper installation and security.

______ **Exhaust Pipe:**
Inspect condition. Verify no cracks (illuminating exterior with bright light while viewing interior facilitates crack detection). Inspect condition and security of F173-1 struts. Inspect condition and security of gearbox vent and clamps.

______ **Starter-Generator & Wiring:**
Inspect condition. Verify no loose, chafed, frayed, or broken wires. Verify no damaged connectors. Verify neatness, proper routing and installation, and security.

______ **Starter-Generator Hose and Filter:**
Inspect condition. Verify no rips, holes, or collapsed areas in hose (gently squeeze hose with finger tips). Verify no tears, punctures, or damage to filter foam; may be cleaned with mild soap (pH between 7 & 9) and warm water solution.

5-45 100-Hour / Annual Inspection (continued)

ENGINE (continued)

______ **Engine Oil and Oil Filter:**
Add oil as required per R66 POH Section 8. Change oil and oil filter as required per RR300 OMM. Verify filter security.

______ **Oil Lines:**
Inspect condition. Verify no leakage where lines connect to tank. Verify no leakage, chafing, or obvious damage to oil lines. Verify line clearance to installed equipment and surrounding structure. Verify security.

______ **Cooling Duct and Oil Coolers:**
Verify installation security with no cracks in duct or mounting. Verify cooler line connections are tight and coolers have no nicks, dents, cracks, or corrosion. Verify duct and cooler cores are free of debris to allow full airflow.

______ **Power Turbine Governor (PTG) Control:**
Refer to Figure 76-2. Verify D333-13 fitting in PTG input lever moves in and out slightly with light finger pressure. If D333-13 fitting does not move in response to light finger pressure then follow compliance procedure in R66 Service Bulletin SB-01.

______ **Fuel Control Unit (FCU) and Control Rigging:**
Verify proper routing and security of throttle and fuel cutoff controls; verify smooth actuation of both controls without binding. Verify FCU throttle arm contacts idle stop with twist grip closed and contacts maximum throttle stop with twist grip open. Verify FCU cutoff lever rests in detent when control is OFF and has 0.030–0.090 inch clearance from maximum fuel stop when control is ON.

______ **Fuel Filter:**
Inspect condition; service fuel filter per RR300 OMM, as required. Verify proper installation and security of wiring and housing.

______ **Fuel Hose:**
Inspect condition. Verify no leakage, chafing, or obvious damage to tank-to-engine hose. Verify hose clearance to installed equipment and surrounding structure. Verify security.

______ **Fuel Flow Meter Transducer (if installed):**
Refer to § 28-23. Visually inspect fuel control unit-to-transducer fuel tube connections, transducer, and reducer connections to transducer & check valve for evidence of leakage. Visually inspect components for any obvious damage; verify proper installation and security. Verify no damaged connectors. Verify wiring neatness, proper routing and installation, and security.

5-45 100-Hour / Annual Inspection (continued)

ENGINE (continued)

______ **Firewalls:**

Inspect condition. Verify no deformation, buckling, wrinkling, cracks, corrosion, fretting, or loose rivets. Pay particular attention to structural attachment points. Inspect condition of engine-to-firewall seal. Verify no open holes.

WARNING

Open holes in engine-to-firewall seals are potential fire leak paths.

______ **Engine Mounts:**

Inspect condition. Verify no cracks or corrosion in engine mount weldment. Verify safety wire and security of mounting bolts.

______ **Lower Steel Tube Frame:**

Inspect condition. Verify no nicks, scratches, dents, cracks, or corrosion. Verify no chafing where wires, hoses, or clamps attach to frame. Examine each weld for cracks with an inspection light and mirror.

______ **Condenser and Fan Assemblies (Air Conditioning; if installed):**

Inspect condition. Verify security of fans, box assembly, condenser, and firewall supports. Verify security of desiccant cap.

______ **Refrigerant Line Assemblies (Air Conditioning; if installed):**

Inspect condition. Verify security, no damage, and clearance to adjacent structure.

______ **Wiring:**

Inspect condition. Verify no loose, chafed, or broken wires or terminals. Check for heat or fluid damage. Verify neatness, proper routing and installation, and security.

______ **Fasteners & Torque Stripes:**

Inspect condition. Verify proper installation and security of fasteners. Renew deteriorated torque stripes per Figure 5-1.

______ **Close & Secure:**

Verify foreign objects are removed. Verify equipment security. Verify cleanliness of interior and of cover or cowling. Install/close inspection covers or cowlings removed in preceding steps. Verify security.

5-45 100-Hour / Annual Inspection (continued)

TAILCONE

______ **Inspection Plugs:**
Inspect condition. Verify proper operation of fasteners.

______ **Tail Rotor Drive Shaft Assembly:**
Examine accessible portion through inspection holes with inspection light and mirror. Verify no cracks, corrosion, or fretting in fore and aft weldment. Verify no evidence of drive shaft contact with tailcone bays. Verify no bowing, bends, dents, cracks, or corrosion. Perform tail rotor drive shaft runout per § 65-21. Verify proper installation, security, and operating clearance.

> **CAUTION**
>
> Bowing, bends, dents, cracks, or corrosion are cause for immediate replacement of tail rotor drive shaft.

______ **Tail Rotor Push-Pull Tube & Forward Bellcrank:**
Examine accessible portion through inspection holes with inspection light and mirror. Inspect condition per § 5-32. Verify no nicks, scratches, chafing, dents, cracks, or corrosion. Inspect rod end bearings per § 5-33; verify rod ends are centered and palnut and jam nut are tight. Check witness holes for proper thread engagement. Inspect bellcrank and bellcrank mount for nicks, scratches, dents, cracks, or corrosion. Inspect spherical bearings per § 5-33. Verify proper installation, security, and operating clearance. Verify tail rotor guard mounting screw shanks clear push-pull tube.

______ **Tail Rotor Drive Shaft Hanger Bearing & Hanger:**
Inspect condition. Inspect bearing for obvious damage. Verify integrity of bearing seals. Verify bearing's inner race-to-drive shaft torque stripe is intact and no evidence of bearing slippage on shaft. Verify no bends, cracks, corrosion, or obvious damage to hanger and hanger mount to tailcone bulkhead. Verify proper installation, security, and smooth operation.

______ **Tail Rotor Drive Shaft Damper Assembly:**
Inspect condition. Inspect bearing for obvious damage. Verify integrity of bearing seals. Inspect bearing housing for cracks or corrosion. Verify bearing's inner race-to-drive shaft torque stripe is intact and no evidence of bearing slippage. Verify no bends, cracks, corrosion or obvious damage to friction arms and (Teflon) bearings. Verify proper installation, security, and smooth operation.

______ **Tailcone Interior:**
Inspect condition. Verify no nicks, scratches, dents, cracks, corrosion, fretting or loose rivets. Verify no cracks where damper assembly mounts to tailcone. Verify no excessive wear in bulkhead bushings from push-pull tubes. Retrieve and discard trapped debris.

5-45 100-Hour / Annual Inspection (continued)

TAILCONE (continued)

______ **Tailcone Exterior:**
Inspect condition. Refer to § 53-41. Inspect tailcone exterior for nicks, scratches, dents, cracks, corrosion, fretting or loose rivets. Verify no obstructions in drain hole at forward edge of each bay (except forward bay).

______ **F050-2 Horizontal Stabilizer (if installed):**
Inspect condition. Verify no nicks, scratches, dents, cracks, corrosion, fretting, or loose rivets. Verify security.

______ **Antennas:**
Inspect condition. Verify no cracks where antennas mount to tailcone. Verify security.

______ **Anti-Collision Light:**
Inspect condition. Verify no cracks where anti-collision light mounts to tailcone. Verify lens cleanliness, clarity, and security. Verify proper operation.

______ **Tail Rotor Visual Warning Guard:**
Inspect condition. Verify no cracks where guard mounts to tailcone. Inspect guard welds for cracks or corrosion. Verify security.

______ **Wiring:**
Inspect condition. Verify no loose, chafed, or broken wires or terminals. Verify neatness, proper routing and installation, and security.

______ **Fasteners & Torque Stripes:**
Inspect condition. Verify proper installation and security of fasteners. Renew deteriorated torque stripes per Figure 5-1.

______ **Close & Secure:**
Verify foreign objects are removed. Verify equipment security. Verify cleanliness of interior and of inspection plugs. Install plugs removed in preceding steps. Verify security.

5-45 100-Hour / Annual Inspection (continued)

TAIL ROTOR & TAIL ROTOR GEARBOX

NOTE
Verify proper hardware installation securing plastic inspection cover. Longer screws could contact aft flex coupling and yoke.

______ **Plastic Inspection Cover:**
Clean cover and inspect condition. Replace as required.

______ **C947-3 (Tail Rotor Drive) Plate Assembly, Aft:**
Refer to Figure 5-4A. Inspect condition. Verify no distortion, nicks, scratches, cracks, corrosion, and fretting. If fretting is detected, contact RHC Technical Support. Verify bonded washers are installed on both sides of each flex plate ear. Verify proper installation, security, and operating clearance.

______ **Tail Rotor Gearbox Input Yoke:**
Inspect condition. Verify no cracks, corrosion, or fretting. Inspect weld for cracks or corrosion. Verify proper installation, security, and operating clearance.

______ **Tail Rotor Gearbox:**
Inspect condition. Verify gearbox-to-tailcone mounting security. Verify no leakage at input or output seals, chip detector, vent plug-filler assembly, or sight gage. With ship on level ground, verify correct oil level and oil cleanliness through sight gage and adjust or flush as required. Inspect Telatemp per § 5-35. Inspect output shaft for nicks, scratches, dents, cracks, or corrosion. Verify proper installation of safety wire (if installed).

______ **Empennage:**
Inspect condition. Verify no nicks, scratches, dents, cracks, corrosion, fretting, or loose rivets on skins or near attachment points. Check tail rotor skid for evidence of tail rotor or tail rotor skid strike. Refer to § 5-61 for tail rotor skid strike inspection criteria. Verify no obstructions in lower vertical stabilizer and skid drain holes. Verify proper installation and security.

______ **Aft Navigation Light:**
Inspect condition. Verify no cracks where aft navigation light mounts to empennage. Verify lens cleanliness, clarity, and security. Verify proper operation.

5-45 100-Hour / Annual Inspection (continued)

TAIL ROTOR & TAIL ROTOR GEARBOX (continued)

______ **Pitch Control Bearing Assembly & Aft Bellcrank:**

Inspect condition. Verify pitch control assembly has less than 0.25 inch rotational play measured at pitch link attach bolt. Verify no leakage at bearing seals. Verify no nicks, scratches, dents, cracks, or corrosion on pitch control housing or bellcrank. Inspect bellcrank spherical bearings per § 5-33. Inspect spherical bearing atop stud protruding from underside of pitch control for cracks. Verify proper installation, security, and smooth actuation without binding.

NOTE

B345-4 tail rotor pitch links can have different shaft diameters (0.250 inch or 0.300 inch). Balance tail rotor per § 18-20 if a different shaft diameter pitch link is installed.

______ **Pitch Links:**

Inspect condition. Inspect rod ends per § 5-33. Remove and reinstall pitch links with outboard end inboard and inboard end outboard as required to obtain maximum service life; additionally, an optional A215-012 O-ring may be installed on A115-1 spacer under bolt head at pitch control. Reinstall chordwise weights at respective attachment points for balance purposes. Verify proper installation of A115-1 spacers. Verify proper installation, security and operating clearance.

______ **Tail Rotor Blades:**

Refer to R66 SB-41. Inspect condition. Refer to § 64-30 for damage limits and repair. Verify no looseness between spherical bearing outer races and root fittings. Inspect bearings per § 5-33. Verify no obstructions in blade tip drain holes. Verify proper installation, security, and pitch change operation.

WARNING

Structural damage may occur if compressed air is applied to blade tip drain holes.

______ **Tail Rotor Hub:**

Inspect condition. Verify no nicks, scratches, gouges, dents, cracks, or corrosion. Inspect elastomeric teeter bearings per § 5-34. Teeter rotor hub and verify teeter bearing bolt, spacers, and nuts do not rotate. Verify hub teeters smoothly. Verify proper installation and security of blade bolts.

______ **Wiring:**

Inspect condition. Verify no loose, chafed, or broken wires or terminals. Verify neatness, proper routing and installation, and security.

______ **Fasteners & Torque Stripes:**

Inspect condition. Verify proper installation and security of fasteners. Renew deteriorated torque stripes per Figure 5-1.

5-45 100-Hour / Annual Inspection (continued)

MAST FAIRING

______ **Mast Fairing:**
Inspect condition. Verify no nicks, scratches, dents, cracks, corrosion, fretting, or loose rivets. Verify no yielding or cracking of pitot line and fuel vent restraint assembly.

> NOTE
>
> Yielding can be caused by over tightening screws in restraint nutplates.

______ **Upper & Lower Ribs:**
Inspect condition. Inspect for cracks especially around mast tube attachments. Verify proper installation and security of ribs and lower rib clamp.

______ **Vertical Push-Pull Tubes:**
Examine accessible portion with inspection light and mirror. Inspect condition per § 5-32. Verify no nicks, scratches, chafing, dents, cracks or corrosion. Inspect rod end bearings per § 5-33; verify rod ends are centered and palnut and jam nut are tight. Check witness holes for proper thread engagement. Verify proper installation, security, and operating clearance.

______ **Pitot Tube & Line:**
Inspect pitot lines for obstructions, cracking, chafing, pinching or kinking. Verify integrity of pitot and static line connections. Verify proper routing and security of pitot tube and line. Verify no cracks where pitot tube mounts to mast fairing. Verify no obstructions in pitot tube.

______ **Fuel Vent Weldment and Tygon® Tubes:**
Inspect condition. Verify no obstructions, cracking, chafing, pinching or kinking in plastic tubes. Inspect vents for cracks or obvious damage. Verify proper installation and security of safety wire.

______ **Swashplate Upper Scissors:**
Inspect condition. Verify bearing play within limits referenced in § 67-40, steps 9 and 10. Closely examine scissor linkage while a second person raises and lowers collective stick. Verify bolts and washers rotate together through full control travel without binding. Inspect fork assembly rod end bearing per § 5-33; verify rod end is centered and palnut and jam nut are tight. Verify proper installation of all parts, part security, and operating clearance.

5-45 100-Hour / Annual Inspection (continued)

MAST FAIRING (continued)

______ **Swashplate Lower Scissors:**

Inspect condition. Verify bearing play within limits referenced in § 67-40, steps 9 and 10. Closely examine scissor linkage while a second person raises and lowers collective stick. Verify bolts and washers rotate together through full control travel without binding. Inspect fork assembly rod end bearing per § 5-33; verify rod end is centered and palnut and jam nut are tight. Verify proper installation of all parts, part security, and operating clearance.

______ **Swashplate Slider Tube:**

Inspect condition. Verify no cracks, corrosion, or loose rivets near tube base flange. Verify no damage or wearing through of anodized coating on tube surface. When viewed under 10X magnification, minute "checkerboarding" of anodized surface is normal.

______ **Swashplate Interior:**

Remove swashplate boot lower ty-rap. Lift boot from swashplate, and verify no boot defects, tears, or material deterioration. Examine swashplate interior with inspection light and mirror. Verify no corrosion or debris between main rotor drive shaft and inside of slider tube. Install swashplate boot lower ty-rap. Verify proper boot position, security, and operating clearance.

______ **Swashplate:**

Inspect condition. Verify no nicks, scratches, gouges, dents, cracks, or corrosion. Verify 0.020 inch maximum radial play between swashplate ball and slider tube. Rotate rotor by hand and verify no rough or dry bearings. Verify proper operation.

______ **Swashplate Shimming:**

Closely examine area between lower swashplate and swashplate ball while a second person slowly raises and lowers collective stick. Verify synchronized movement of swashplate ball with swashplate when swashplate reverses direction.

NOTE

Swashplate shimming is required when swashplate ball lags collective inputs, indicating axial play. Shim swashplate per Chapter 67.

______ **Fasteners & Torque Stripes:**

Inspect condition. Verify proper installation and security of fasteners. Renew deteriorated torque stripes per Figure 5-1.

______ **Close & Secure:**

Verify foreign objects are removed. Verify equipment security. Verify cleanliness of interior and of access fairing. Close mast fairing and verify security.

5-45 100-Hour / Annual Inspection (continued)

ROTOR HUB & MAIN ROTOR BLADES

______ **Teeter Stops & Teeter Stop Brackets:**
Inspect both urethane teeter stops and associated stainless steel brackets. Replace stops if cracked due to weathering. If stops evidence pinching and/or brackets are deformed, excessive MR teetering has occurred; contact RHC Technical Support for further instructions.

______ **Droop Stops:**
Cone and support both MR blades. Inspect curved bottoms of both aluminum droop stops where spindle tusks contact; replace any droop stop if wear exceeds 0.030 inch.

______ **Hub:**
Inspect condition. Verify no nicks, scratches, gouges, dents, cracks, or corrosion. Verify no brown or black residue indicating bearing wear. Verify proper installation and security.

______ **Hinge Bolts:**
Inspect condition. Check blade hinge friction by lifting blades until spindle tusks clear droop stops. Hold one blade level and cone opposite blade; rotor hub must not teeter as blade is coned. Repeat check on opposite blade. Verify cotter pins are installed and secure. Verify bolt heads and nuts are torque striped to thrust washers.

______ **Pitch Links & Rod Ends:**
Inspect condition. Inspect rod end bearings per § 5-33; verify rod ends are centered and palnut & jam nut torque stripes are acceptable. Verify correct orientation of C115-1 spacers. Check witness holes for proper thread engagement. Verify proper installation of safety wire (if applicable).

______ **Blade Spindles & Root Fittings:**
Inspect condition. Verify no obvious damage to visible portions of blade spindles and pitch horns. Verify no obvious damage to, and no missing paint from, blade root fittings, especially in area adjacent to inboard edges of blade skin and doublers.

______ **Blade Boots:**
Inspect condition. Verify no boot defects or oil leakage. Verify boot security. Verify clearance from hub assembly through full control travel.

______ **Fasteners & Torque Stripes:**
Inspect condition. Verify proper installation and security of fasteners. Renew deteriorated torque stripes per Figure 5-1.

______ **Main Rotor Blade Tip Maintenance:**
Perform main rotor blade tip maintenance per § 62-60.

5-45 100-Hour / Annual Inspection (continued)

ROTOR HUB & MAIN ROTOR BLADES (continued)

______ **Blade Inspection and Care:**

Refer to § 62-40. Inspect skins and doublers for scratches and corrosion. Inspect blades for dents, local deformations, and voids. As required, wax blades with soft cleaning cloths using carnauba-type wax (such as SC Johnson® Paste Wax). Ensure tip cover and blade tip drain holes are unobstructed. Verify placard legibility and remove old tracking tape and/or residue.

WARNING

Structural damage may occur if compressed air is applied to blade tip drain holes.

Intentionally Blank

5-45 100-Hour / Annual Inspection (continued)

LANDING GEAR

______ **Landing Gear Strut Fairings:**
Open as required to access landing gear structure for inspection. Inspect condition. Verify no nicks, scratches, dents, cracks, corrosion, fretting, or loose rivets. Verify hose clamp security and acceptable general cleanliness of fairing interior. Close and secure fairings.

______ **Skid Tubes & Shoes:**
Inspect condition. Verify skid tube and skid shoe wear is within limits specified in §§ 32-30 & 32-31. Verify drain holes are not obstructed. Verify security of rain caps; if rain cap is loose or damaged, verify no internal corrosion. Verify security of ground handling wheel brackets and step(s) if installed.

______ **Struts Assemblies:**
Inspect condition. Verify no cracks or corrosion, especially at collar and gusset joints and in weld areas at bottom of struts. Torque-check strut-to-skid-tube bolts. Verify security.

______ **Cross Tubes:**
Inspect condition. With helicopter on level ground, verify minimum tail skid height per § 32-20. Verify no cracks, corrosion, or fretting at elbows. Verify security of (clear plastic) rain caps; if rain cap is loose or damaged, verify no internal corrosion. (Note that one vent hole per cross tube is located near left or right end of tube to prevent pressurization.)

______ **Landing Gear Attach Points:**
Inspect condition. Verify no buckling, cracks, fretting, or loose fasteners. Inspect mounts and verify no loose swages or worn bearings.

______ **Fasteners & Torque Stripes:**
Inspect condition. Verify proper installation and security of fasteners. Renew deteriorated torque stripes per Figure 5-1.

______ **D679 Cylinder assembly (Pop-out floats; if installed):**
Inspect condition. Verify security. Verify pressure gage indicates correct pressure for ambient temperature; refer to placard on cylinder for limits.

______ **Inflation manifold (Pop-out floats; if installed):**
Inspect condition. Verify no chafing or pinching of hoses, especially where hoses pass though structure.

______ **Float assemblies (Pop-out floats; if installed):**
Inspect condition of stowed floats. Verify no holes, cuts, tears, abrasion through or unraveling of, float covers. If cover damage is found, inflate and inspect floats per § 32-64. Annually apply A257-7 dry-film lubricant to float cover snap mating surfaces. Verify snaps and hook-and-loop fasteners are properly secured. Verify float-to-skid attachment security.

5-45 100-Hour / Annual Inspection (continued)

CABIN

______ **General Interior:**
Inspect condition. Verify general cleanliness of cabin and seat compartment interior. Verify no loose objects or equipment, which could foul controls or injure occupants in a hard landing. Verify legibility of placards and markings. Verify serviceable condition of switches, knobs, handles, and other controls.

______ **Seat Belts & Shoulder Harnesses:**
Inspect condition. Verify no fraying or broken stitching of seat belts or shoulder harnesses. Verify no significant UV damage. Check inertia reels for proper operation by pulling harness quickly to verify locking function. Check buckles for proper operation. Check belt and reel attachment points for security. Verify no cracks in seat belt anchor welds. Verify security.

NOTE

TSO tag not required on factory-installed harnesses.

______ **Cyclic Guard (if installed):**
Inspect condition of cyclic guard. Verify security and proper operation.

______ **Windshields & Windows:**
Inspect condition. Verify no significant UV damage (yellowing). Minor defects or imperfections that do not impair pilot visibility or indicate impending structural failure are acceptable. Refer to § 52-30 for damage and repair limits. Verify proper installation and security.

______ **Static Ports:**
Inspect condition. Verify no obstructions.

5-45 100-Hour / Annual Inspection (continued)

CABIN (continued)

______ **Yaw String:**
Inspect condition. Verify minimum string length is 3 inches on each side of clip. Verify security.

______ **Landing & Taxi Lights:**
Inspect condition. Verify lens cleanliness, clarity, and security. Verify proper operation.

______ **Landing Light Retainer & Support:**
Inspect condition. Verify no cracks where retainer mounts to support. Verify security.

______ **Left & Right Navigation Lights:**
Inspect condition. Verify no cracks where right and left navigation lights mount to fuselage. Verify red left, green right, lens cleanliness, clarity, and security. Verify proper operation.

______ **Exterior:**
Inspect condition. Inspect cabin exterior for nicks, scratches, dents, cracks, corrosion, fretting, or loose rivets. Loose rivets may be indicated by cracked paint and/or black residue around heads. Verify general cleanliness.

______ **Doors:**
Inspect condition. Verify no cracks and proper fit of door-to-door frame. Verify no structural cracks near door hinges or latches. Verify proper operation of door latching and locking mechanisms. Ensure door hinge pins are secured with cotter rings. Verify security of hinge mounting screws. Verify proper installation and operation of gas struts and door vent assembly.

SPECIAL EQUIPMENT

______ **Transmit and Intercom Switches:**
Verify proper operation of special transmit and intercom switches.

______ **PA/Siren Speaker:**
Inspect condition. Verify no cracks in speaker. Verify security of mounting.

______ **Wiring:**
Inspect condition. Verify no loose, chafed, or broken wires or terminals. Verify neatness, proper routing and installation, and security.

LIFE-LIMITED PARTS, PARTS WITH A RECOMMENDED TBO OR REPLACEMENT TIME, ADs, & SBs

______ **Life-Limited Parts:**
Refer to § 4-10. Verify life-limited parts correspond with aircraft maintenance records. Verify life-limited parts have sufficient time remaining for projected operations.

______ **Parts with a Recommended Time Between Overhauls (TBO) or Replacement Time**:
Refer to § 1-92. Verify parts with a recommended TBO or replacement time correspond with aircraft maintenance records. Verify parts with a recommended TBO or replacement time have sufficient time remaining for projected operations.

5-45 100-Hour / Annual Inspection (continued)

LIFE-LIMITED PARTS, PARTS WITH A RECOMMENDED TBO OR REPLACEMENT TIME, ADs, & SBs

______ **Airframe and Engine Accessories:**
Refer to § 1-92 and accessory manufacturer's maintenance publications. Verify accessories correspond with aircraft maintenance records. Verify accessories scheduled for maintenance have sufficient time remaining for projected operations.

______ **Airworthiness Directives:**
Verify applicable airframe, engine, and accessory Airworthiness Directives (ADs) have been performed according to AD compliance procedures. Some helicopters may be affected by ADs that require recurring inspections at less than 100-hour or annual intervals. Recent U.S. Airworthiness Directives are online at www.faa.gov.

______ **Service Bulletins and Letters:**
Verify applicable airframe, engine, and accessory Service Bulletins (SBs) and Service Letters (SLs) have been complied with according to manufacturers' instructions. Some helicopters may be affected by SBs or SLs that require recurring inspections at less than 100-hour or annual intervals. RHC Service Bulletins and Service Letters are online at www.robinsonheli.com under the Publications tab.

REQUIRED DOCUMENTS AND PLACARDS

______ **Documents**:
Check that required documents (Airworthiness Certificate, Registration, applicable Radio Station License, Pilot's Operating Handbook, Equipment List/Weight & Balance Data) are onboard, legible, and current.

______ **Placards**:
Verify required placards are properly installed, legible, and current. Refer to Pilot's Operating Handbook Section 2 for placard requirements.

INSPECTION AND ACCESS COVERS

______ **Foreign Objects Removed:**
Verify all tools, loose hardware, rags, and other foreign objects are removed from helicopter.

______ **Covers Closed and Secure:**
Refer to § 6-70. Install/close inspection and access covers and cowlings removed in preceding steps. Verify proper installation and security.

5-45 100-Hour / Annual Inspection (continued)

MAINTENANCE RECORDS

______ **Maintenance Records:**
Verify maintenance records are accurate, legible, and complete. Enter maintenance performed (such as part replacement, equipment adjustments, servicing, and lubrication) and inspection data. Data must include a description of (or reference to data acceptable to the Administrator) the work performed, date, helicopter total time in service, signature, certificate type and certificate number of person approving helicopter for return to service.

Inspection Procedures and Checklist completed:

Mechanic's signature: ______________________ Date: ______________

Intentionally Blank

5-50 2000-Hour/12-Year Inspection

NOTE
Fuel bladder(s) are on condition.

NOTE
KI-6602 2000-Hour Inspection Kit contents are available online at https://robinsonheli.com for review.

NOTE
12-Year Inspection is only required for helicopters that have accumulated 12 years in service and less than 2000 hours time in service since new, since last 2000-hour inspection, or since last 12-year inspection.

1. Refer to helicopter maintenance records and § 4-30; replace life-limited parts, or next higher assemblies, as required.
2. Refer to helicopter maintenance records and § 1-92; perform additional component maintenance, as required.
3. Visually inspect stabilizers. Verify no cracks, corrosion, loose rivets, dents, or deformation.
4. Remove fuel bladder(s) per Chapter 28. Visually inspect interior and exterior. Verify no corrosion, residue, microbial growth, or damage to fabric. Visually inspect adjacent structure for evidence of bladder leakage. Replace roll-over vent valve O-rings and packings per § 28-11. Remove any foreign object debris. Install bladder(s) per Chapter 28.
5. Perform (engine driveline) forward flex plate shimming per § 63-11 and (tail rotor driveline) intermediate flex plate shimming per § 65-30.
6. Fill and bleed hydraulic system per § 12-34 as required.
7. Drain engine oil per § 12-60; utilize a suitable clean container if reuse of oil is intended. Using a borescope or remote camera, inspect oil tank internal baffle and welds for signs of cracking. If cracks are detected, or if a broken baffle is found, replace oil tank per § 79-20. Add engine oil per § 12-60.
8. Perform main rotor flight control and blade angle rigging per §§ 18-30 and 18-40.
9. Perform tail rotor flight control and blade rigging per §§ 18-50 and 18-60.
10. If installed, perform leak check of air conditioning system per § 12-83.
11. Perform 100-Hour / Annual Maintenance and Inspection per § 5-45.
12. Weigh helicopter per § 8-20.

5-50 2000-Hour/12-Year Inspection (continued)

13. Balance tail rotor per § 18-20. Track and balance main rotor per § 18-10. Perform flight checks per § 5-43.
14. Drain and flush tail rotor gearbox per § 12-23.
15. Make appropriate maintenance record entries. Enter maintenance performed (such as part replacement, equipment adjustments, weighing, servicing, and lubrication) and inspection data. Data must include a description of (or reference to data acceptable to the Administrator) the work performed, date, helicopter total time in service, signature, certificate type and certificate number of person approving aircraft return to service.

5-51 C258-5 Main Rotor Pitch Link Assembly Inspection

1. Temporarily mark each pitch link and associated swashplate ear with unique identifiers, such as different colors and/or X & O. Measure and record overall lengths of both links.
2. Remove pitch links.
3. R66 Service Letter SL-20 refers. Disassemble pitch links, keeping parts from each link separate from the other.
4. Evaluate rod ends per § 5-33 and replace as required.
5. Visually inspect parts with 10X magnification for obvious damage. Replace damaged parts.
6. Visually inspect interior of barrels with borescope for obvious damage. Replace damaged barrels.
7. Apply a light coat of A257-2 or -22 oil to rod end threads and assemble pitch links; adjust to recorded lengths. Torque jam nut & adjacent palnut per § 20-32. Special torque self-locking 21FKF-813 jam nut per § 20-33.
8. Install pitch links to associated swashplate ear and, if installed, main rotor blade. Torque fasteners per § 20-32 and torque stripe per Figure 5-1.

5-52 Swashplate Assembly 12-Year Inspection

1. Remove swashplate assembly per § 67-40.
2. Remove both pitch links and upper A205-7 fork assembly from swashplate.
3. Determine revision ("REV") letters on C017-6 swashplate data plate. If revision letters are "AD" or subsequent, proceed to step 2. If revision letters are "AA", "AB", or "AC", perform R66 Service Bulletin SB-30.
4. Refer to Figure 12-7. Remove (10) NAS1352 screws (with washers) securing C206-2 & C200-3 retainers to upper swashplate. Remove both retainers and C219-3 spacer and set aside.
5. Remove inner screws securing sleeve to lower swashplate. Remove sleeve, shims, and ball and set aside.
6. Using a 0.006 inch feeler gage, gently pry up outer edge of upper C217-1 seal and expose top ball bearing. Discard upper seal.
7. Clean all parts, including C203-5 yokes.
8. Visually inspect cleaned parts with 10X magnification, to include blind screw-holes in upper & lower swashplates, for obvious damage. Replace swashplate assembly if damage is detected on either upper or lower swashplate. Replace damaged parts.
9. Perform swashplate tilting friction adjustment per § 67-41 step 4.
10. Lubricate swashplate bearings per § 12-90 steps 7 thru 11. Install new upper seal during procedure.
11. Remove rod end form upper fork. Using non-metallic tools, remove majority of sealant in threaded hole of fork. Visually inspect parts with 10X magnification for obvious damage. Replace damaged parts. Assemble upper fork assembly and adjust pivots' center-to-center dimension to 3.85 ± 0.03 inches. Standard torque jam nut & palnut per § 20-32 and torque stripe per Figure 5-1. Fill exposed cavity with B270-13 sealant.
12. Remove lower A205-7 fork assembly from non-rotating scissors and clean. Remove rod end from lower fork. Visually inspect parts with 10X magnification for obvious damage. Replace damaged parts. Assemble lower fork assembly and adjust pivots' center-to-center dimension to 3.70 ± 0.03 inches. Standard torque jam nut & palnut per § 20-32 and torque stripe per Figure 5-1. Install lower fork on C204-2 arm and standard torque bolt per § 20-32. Install palnut, standard torque per § 20-32, and torque stripe per Figure 5-1.
13. Install swashplate assembly per § 67-40 Part B.

5-53 Landing Gear Assembly 12-Year Inspection

1. Inspect cross tubes per § 32-20.
2. Remove landing gear per § 32-10.
3. Remove left skid tube, and remove rain cap and skid extension from tube.
4. Remove fasteners securing struts to cross tubes. Using a twisting motion, remove left struts from cross tubes.
5. Remove right skid tube, and remove rain cap and skid extension from tube.
6. Using a twisting motion, remove right struts from cross tubes.
7. Clean cross tubes, struts, and skid tubes.
8. Visually inspect interior of struts with borescope (or similar) for obvious damage. Visually inspect exterior of struts using minimum 3X magnification for obvious damage. Any corrosion on, or adjacent to, a weld requires corrosion & paint removal followed by MPI. Upon favorable MPI results, apply § 20-76 powder coat.
9. Refer to § 32-30. Visually inspect interior of skid tube with borescope (or similar). Visually inspect exterior of parts using minimum 3X magnification. As required, touch-up coatings with § 20-75 primers and § 20-77 paints.
10. Visually inspect interior of cross tubes with borescope (or similar) for obvious damage. Visually inspect exterior of cross tubes using minimum 3X magnification for obvious damage. As required, touch-up coatings with § 20-75 primers and § 20-77 paints.
11. Assemble landing gear.
12. Install landing gear per § 32-10.

5-54 Hydraulic Reservoir 12-Year Inspection

1. Perform hydraulic system drain and flush per § 12-33 step 1. Remove D516-1 cap.
2. Refer to Figure 5-5. Suction remaining fluid using suitable, clean, plastic tube (do not use metal tool). Wipe out any residue from both traps with clean, foam-tip swab.
3. Inspect interior of reservoir for corrosion with borescope (or similar). Replace reservoir if corrosion is detected.
4. Perform hydraulic system drain and flush per § 12-33, steps 2 thru 12.

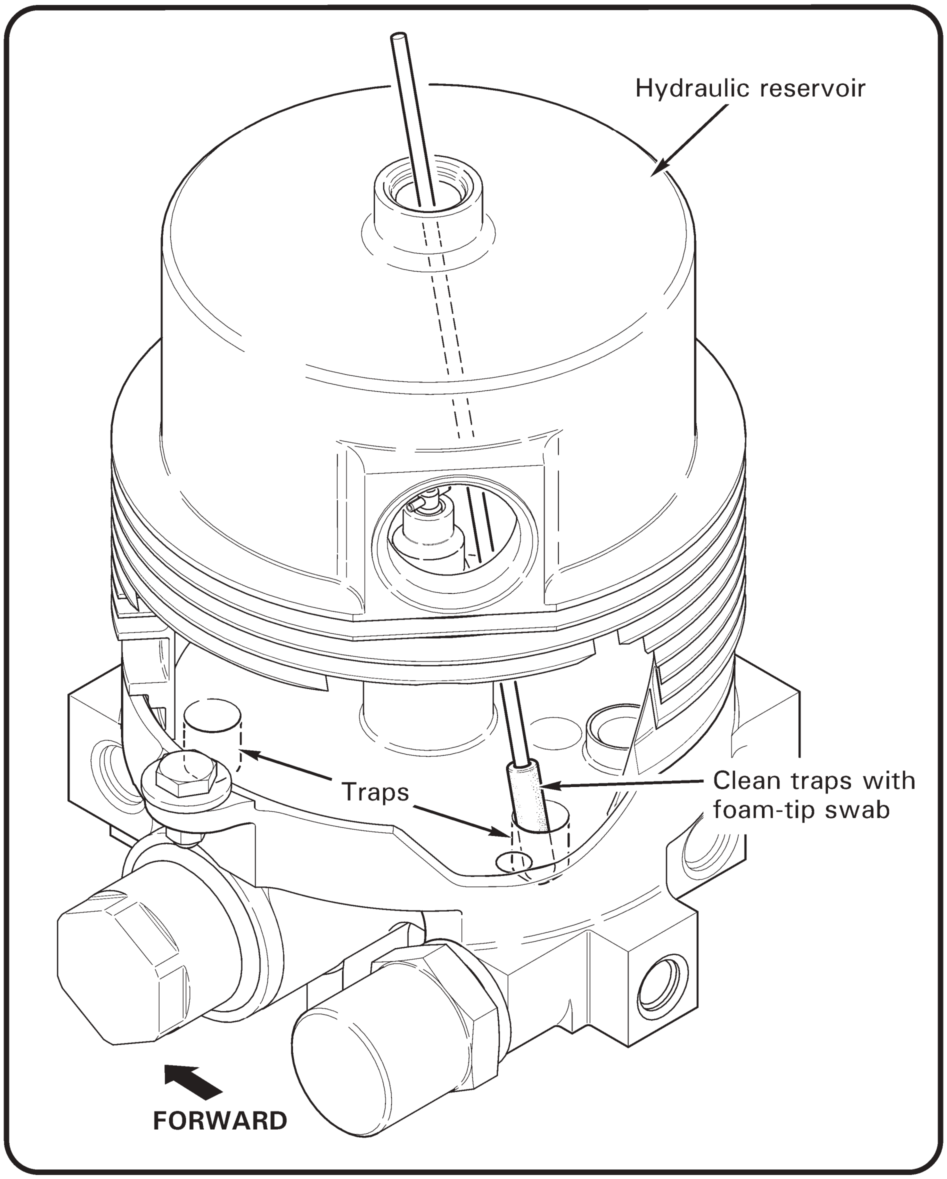

FIGURE 5-5 HYDRAULIC RESERVOIR INSPECTION

Intentionally Blank

5-60 Special Maintenance and Instructions

WARNING

Do not install or return to service any part removed from a damaged aircraft unless the part can be verified as undamaged. Return suspect parts to RHC, with details of damage history, for airworthiness evaluation.

5-61 Tail Skid Strike

A. If evidence of scuffing is found on the tail skid, inspect the rotorcraft as follows:

1. Visually inspect tail rotor blades for evidence of solid object or ground contact. If tail rotor damage is found, inspect tail rotor for strike per § 5-62. ______
2. Visually inspect vertical stabilizer for evidence of buckling, cracks, or loose rivets at tail skid and at lower vertical stabilizer-to-horizontal stabilizer attach points. ______
3. Visually inspect tail rotor guard for bending or cracking at attach mounts. ______
4. Visually inspect the empennage assembly-to-tailcone attach points for evidence of buckling, loose rivets, or cracking. ______
5. Visually inspect tailcone for damage and tailcone-to-upper steel tube structure attach points for buckling and loose attach bolts. ______

B. For tail skid bending or breakage, or buckling of lower vertical stabilizer, perform the following inspections in addition to those listed in Step A.

1. Perform tail rotor drive shaft runout per § 65-21. ______
2. Remove tailcone assembly per § 53-40. Visually inspect (8) tailcone mounting holes [(4) tailcone & (4) upper frame] and verify no elongation of holes (0.454-inch diameter maximum). ______
3. Remove empennage assembly per § 53-70. Remove tail rotor gearbox per § 65-40. ______
4. Perform § 5-75 Inspection After Stabilizer Damage. ______
5. Visually inspect mount assembly or horizontal stabilizer (as applicable) attach points and verify no elongated holes (0.386-inch diameter maximum), loose rivets, or buckling. ______
6. Remove lower vertical stabilizer per § 53-72. Visually inspect attach points on vertical stabilizer and mount assembly or horizontal stabilizer (as applicable). Verify no elongated holes (0.266-inch diameter maximum), buckling, cracks, or loose rivets. ______
7. Remove tail rotor guard per § 53-50. Remove D082-1 mount. Visually inspect guard, mount, & blocks; verify no deformation & no elongation of attach holes. ______

5-62 Tail Rotor Strike

The tail rotor strike inspection is listed in two parts. Part 1 concerns damage received by a tail rotor blade due to contact with a small stone, tall grass, or some small object contacting rotor blade in free air. Part 2 is concerned with sudden stoppage of tail rotor due to ground or solid object contact causing bending or shearing of a tail rotor blade or blades.

1. Inspect tail rotor blades per § 64-30 and perform Part 2, step (a).
2. If one or both tail rotor blades contact ground or a solid object causing bending or shearing of blades a tail rotor sudden stoppage inspection must be performed. Inspect per following procedure:
   a. Perform tail rotor drive shaft runout per § 65-21. If runout exceeds 0.025 inch at any location the shaft must be replaced.
   b. Remove tail rotor assembly per § 64-10 and tail rotor gearbox per § 65-40 and return to RHC.
   c. Visually inspect D224 tail rotor drive shaft for evidence of twisting, nicks, dents or scratches. Nicks and scratches may be polished out to a maximum of 0.003 inch deep. Evidence of twisting or dents is cause for replacement of the drive shaft.
   d. Remove yokes from each end of tail rotor drive shaft. Inspect arms for deformation and holes for any elongation. Strip paint and dye penetrant inspect yokes according to manufacturer's instructions (forward yoke may be magnetic particle inspected).
   e. Remove F196-1 (tail rotor drive) shaft weldment per § 65-10. Strip paint back at least 2 inches from welds at both ends of shaft and dye penetrant or magnetic particle inspect. Verify no cracks.
   f. Replace C947-3 plate assemblies (forward, intermediate, and aft).
   g. Visually inspect F193-2 hanger and F172-3 (bearing) housing for cracks or deformation.
   h. Visually inspect tailcone and empennage for evidence of a tail rotor blade strike.
   i. Visually inspect main rotor system.

5-63 Main Rotor Strike

The main rotor strike inspection is listed in two parts. Part 1 concerns contact of main rotor blades with object in free air such as small stones, brush, small birds, etc. Part 2 is concerned with sudden stoppage of main rotor due to ground or solid object contact.

1. If main rotor blade has contacted a small object in free air such as small stones, brush, small birds, etc., inspect main rotor blades as follows:

   a. Verify any nicks, scratches, and dents are within § 62-10 limits; repair as required.

   b. Visually inspect trailing edge of blade for evidence of buckling or bending. This will be most evident near root of blade.

CAUTION

Any blade buckling or permanent bending is considered sudden stoppage and requires a sudden stoppage inspection of the entire rotorcraft.

2. If main rotor blade or blades have contacted ground or a solid object, they must be inspected for sudden stoppage. Sudden stoppage is evident when buckling or bending of the main rotor blades has occurred. Use the following procedure for inspecting rotorcraft after main rotor sudden stoppage has occurred:

   a. Perform tail rotor drive shaft runout per § 65-21.

   b. Visually inspect G027 scroll assembly and F193 bearing hanger for cracks and/or deformation.

   c. Remove the following components and return to RHC for inspection.

      C005-10 Main Rotor System
      F006 Main Rotor Gearbox
      F018 Clutch Assembly
      A947-2 Flex Plates
      C947-3 Flex Plates
      C017 Swashplate
      F906 Yoke
      F908 Yoke
      F910 Yoke
      F196 Shaft Weldment
      F642 Shaft Weldment
      G174 Fanwheel

   d. Inspect engine for sudden stoppage per engine manufacturer's instructions.

5-64 Rotor/Engine Overspeed

1. For rotor overspeeds between 106 and 112%:

> NOTE
>
> Refer to Part 3 if a power-on overspeed occurs.

   a. Check main rotor and tail rotor dynamic balance. Compare pre-overspeed and post-overspeed balance.

> CAUTION
>
> Any change in rotor dynamic balance greater than 0.3 ips requires inspection per Part 2.

   b. Remove main rotor blades. Drain pitch bearing housings. Remove outer blade boot clamps and fold boots away from pitch horns. Rotate spindles to verify no brinelling of pitch bearings.

> NOTE
>
> Bearings have a high preload; slight drag is normal. If roughness is evident, return blade and spindle assembly to RHC for repair.

   c. Visually inspect main and tail rotor blades.

   d. Check tail rotor drive shaft runout per § 65-21.

2. If an overspeed at or above 112% is reported or suspected or if balance changes or pitch bearing roughness is evident, perform following inspections in addition to Part 1.

> NOTE
>
> Refer to Part 3 if a power-on overspeed occurs.

   a. Perform Part 1 inspection.

   b. Check coning hinge bolts for evidence of bending. Replace any bent bolts.

   c. Coning hinge bolts, washers, and journals must be magnetic particle inspected. Replace any cracked bolts, journals or washers.

   d. Visually inspect hub and dye penetrant inspect any areas suspected of having cracks. Dye penetrant inspect according to manufacturer's instructions.

   e. Reinstall blades and check balance. If a change in balance is evident, rotor system should be returned to RHC for inspection and/or repair.

3. Refer to RR300 Series Operation and Maintenance Manual (OMM) for overspeed inspection requirements.

Intentionally Blank

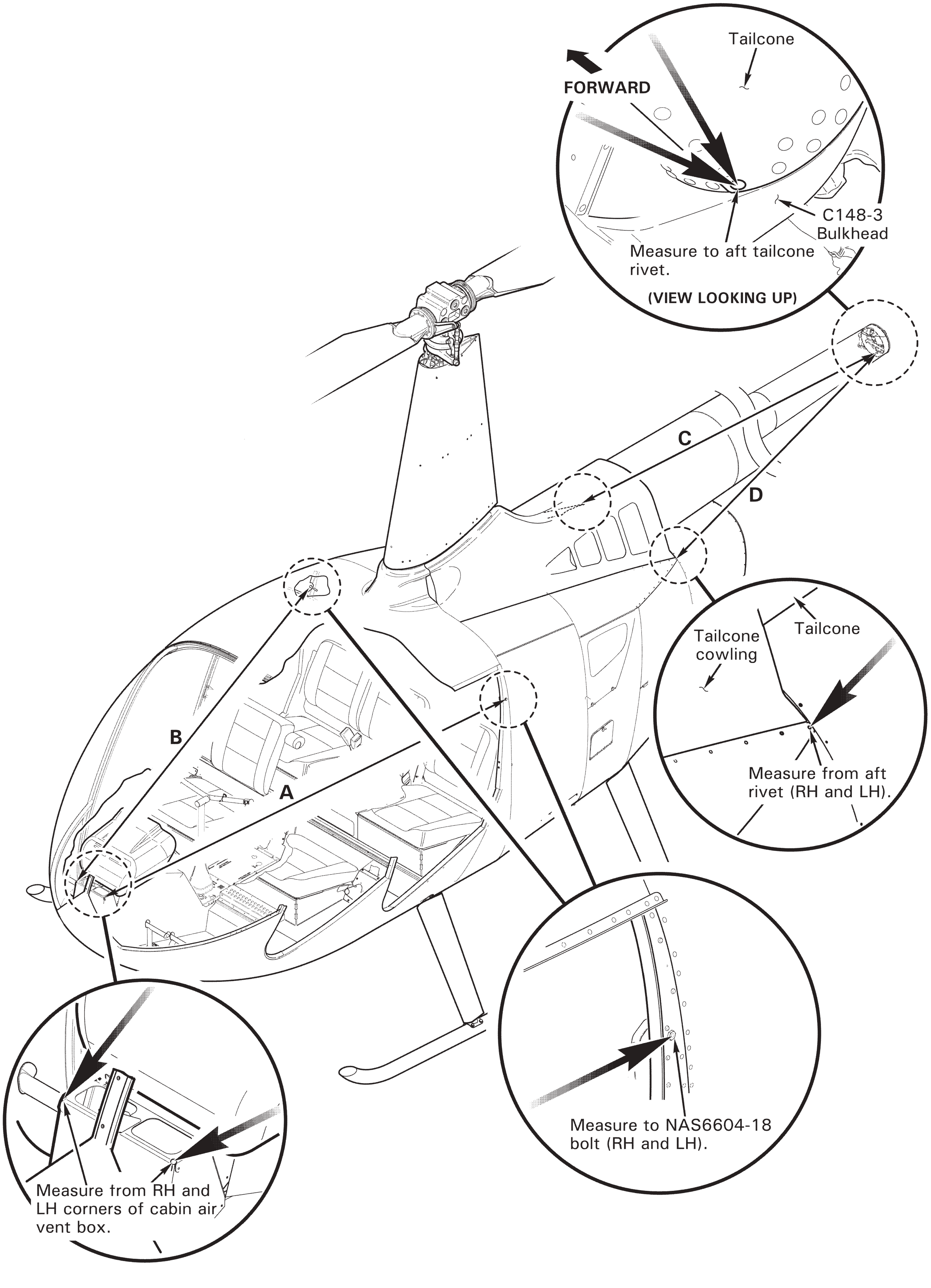

FIGURE 5-6 SYMMETRY CHECK

5-65 Hard Landing

> NOTE
>
> RR300 Operation and Maintenance Manual requires special engine inspection (subtask 05-50-00-210-002) when a hard landing exceeds 10g. While there is no single indicator for a 10g impact, an impact was less than 10g if there was no contact between the fuselage belly or landing gear cross tubes and the ground. Yielding or buckling of any engine mount tubes or crushing of the energy absorbers within any occupied seat indicates the impact was likely greater than 10g.

The hard landing inspection is listed in two parts. Part 1 concerns yielding (bending) of the cross tubes due to hard landing such as hovering autorotations or run-on landings that do not apply side loads to the landing gear. Part 2 concerns hard landings that, in addition to yielding of cross tubes, have yielding of steel tube frames or fuselage primary structure.

> NOTE
>
> Buckling and bent steel tube structure are evidence of side loads on the airframe.

1. Yielding of cross tube due to hard landing with no side loads:
   a. Perform tail rotor drive shaft runout per § 65-21.
   b. Visually inspect main rotor blades for oil canning of skins and buckling. Inspect and repair main rotor blades per §§ 62-40 and 62-50.
   c. Check landing gear cross tubes for yielding beyond serviceable limit. Place rotorcraft on level ground, push up on tail rotor gearbox and release, allowing rotorcraft to settle, then measure from tip of tail skid to ground. If less than 38 inches, one or both cross tubes must be replaced.
   d. Inspect front seat structure for yielding. Visually inspect, thru vent holes in seat bottoms, the internal box structure for any deformation. Inspect aft seat structure for yielding.
2. If yielding of steel tube frame(s) OR fuselage has occurred, inspect rotorcraft as follows:
   a. Perform Part 1 inspection.
   b. Verify no yielding or cracks in steel tube frames.
   c. Visually inspect fuselage, landing gear attach points, and firewalls for buckling or cracks.
   d. Dye penetrant inspect upper steel tube structure and all welded joints.

5-65 Hard Landing (continued)

2. e. Visually inspect tailcone for buckling or loose rivets.

   f. Visually inspect landing gear skid tube-to-strut attach points for bending and cracks.

   g. Hard landings can be accompanied by tail skid strikes, tail rotor strikes, main rotor blade strikes, etc. To inspect for these conditions, refer to the appropriate instructions in § 5-60. Refer to § 53-11 for cabin repairs. Any cracks, yielding or buckling in steel tube structure or tailcone are cause for replacement or factory repair.

   h. Replace parts as required.

   i. Check for symmetry if there is evidence of buckling of the cabin assembly per Figure 5-6. Position helicopter on a hard, level surface with the weight of the helicopter settled on the skids. Measure and record distances of lines A, B, C, and D. Verify the difference between lines A & B is not more than 0.30 inch and the difference between lines C & D is not more than 0.40 inch. If the difference between lines A & B or C & D is greater than the limits given, the cabin assembly must be returned to RHC for repair.

Intentionally Blank

5-66 Dye Penetrant Inspection of F020-1 Upper Frame

1. Carefully clean all paint, primer, oil, grease, etc from steel tube structure around and adjacent to four tailcone mounts.
2. Apply epoxy paint remover and allow the softening action to complete (temperature affects time required).
3. Remove softened paint by hand using a wire brush. Be sure steel structure is perfectly clean before application of dye penetrant.
4. Carefully check for cracks in and around each weld bead and along each steel supporting tube for at least two inches away from weld beads. Replace any frame exhibiting crack indications.
5. If no cracks are found, clean all inspection materials from steel tubing.
6. Prime with good quality zinc chromate or epoxy primer and allow adequate drying time.
7. Refinish area with gray epoxy top coat or equivalent.

5-67 Corrosion on F020-1 Upper Frame

1. Polish out corrosion on steel frame tube members.
   a. Polish out light surface corrosion on frame members using Scotchbrite or 400 grit wet-or-dry sandpaper. Verify 0.002 inch maximum depth after rework.
   b. Polish out corrosion pitting using 320-grit wet-or-dry sandpaper. Verify 0.004 inch maximum depth and 0.10 inch maximum diameter, after rework.

> NOTE
>
> For large areas of corrosion, it may be necessary to remove entire upper frame from aircraft and strip off paint to adequately determine extent of damage.

2. Prime bare metal with a good quality zinc chromate or epoxy primer.
3. Refinish area with gray epoxy top coat or equivalent.

5-68 Main Rotor Gearbox Overtemp Illumination

If the gearbox overtemp annunciator segment illuminates, remove main rotor gearbox per § 63-20 and return to RHC.

> NOTE
>
> Light illuminates at 240 ± 5°F.

5-69 Main Rotor Gearbox (MR) Chip Light Illumination

If the MR CHIP annunciator segment illuminates:

1. Remove main rotor gearbox chip detector per § 12-13. Inspect any particles found on the chip detector. Examine the particles and perform following appropriate corrective action:

    a. For fuzz particles: Clean chip detector with compressed air or toothbrush (do not use magnet) and reinstall per § 12-13. Normal wear, especially new gearboxes, will produce fine fuzz.

    b. For flake particles or slivers longer than 0.12 inch or wider than 0.02 inch: Clean chip detector. Replace gearbox filter per § 12-12. Visually examine old filter with 10X magnification; return gearbox to RHC if metallic debris is detected.

    c. For large ferrous chips or chunky particles: Remove gearbox per § 63-20 and return to RHC. Return chips and/or particles if possible.

5-70 Tail Rotor Gearbox (TR) Chip Light Illumination

If the TR CHIP annunciator segment illuminates:

1. Drain the gearbox per § 12-21, straining the oil through a 190-micron (or finer) paint filter into a clean container.
2. Inspect any particles found in the paint filter or on the chip detector. Examine the particles for size; any particles larger (0.09 inch long or 0.02 inch wide) than fine fuzz (normal wear) should be identified as ferrous or non-ferrous by using a magnet. If particles are ferrous, remove tail rotor gearbox per § 65-40 and return it to RHC.

5-71 Main Rotor Gearbox Filter Bypass Indicator

> **NOTE**
>
> Extremely cold temperatures may cause the bypass to activate.

If the main rotor gearbox filter bypass indicator button continues to activate after two consecutive resets (at operating temperature), perform the following:

1. Service filter per § 12-12. Examine filter for particles.

    a. If filter is clean, replace (Purolator-Facet P/N) 1740839 bowl assembly or F651-1 filter assembly.

    b. If filter is contaminated, return main rotor gearbox to RHC for overhaul, replace main rotor gearbox oil cooler and flush oil lines.

5-72 Lightning Strike

Lightning strikes are extremely rare for helicopters operating in VFR conditions.

If a lightning strike does occur, RHC recommends performing a 100-hour inspection per § 5-45 and performing the inspection for lightning strike damage per Rolls-Royce RR300 Operation and Maintenance Manual (OMM).

High voltage that is well conducted through the aircraft structure will dissipate and cause minimal damage. High voltage that is not well conducted through the aircraft structure can result in excessive heat, which can bake, burn, char, or even melt certain materials. Heat damage may or may not be detectable by visual inspection. A component may not exhibit obvious damage, but temperatures above 300° F can alter the strength of some materials and thus affect a component's service life and airworthiness.

Visually inspect main rotor blades, landing gear, drive train, airframe, and flight controls thoroughly for obvious damage such as electrical arcing or burns, pitting, or cracking. Particular attention should be given to rod ends, journals, etc., where the conductive path is most susceptible. If obvious damage is detected in any of the above-mentioned systems, additional components may require replacement. Contact RHC Technical Support with detailed documentation for further guidance prior to approving aircraft for return to service.

5-73 Pop-Out Float-Equipped Helicopter Water Landing with Tail Rotor Contact

1. Clean tail rotor blades, hub, and airframe exterior with a mild soap (pH between 7 & 9) and water solution per Chapter 20.

> **CAUTION**
>
> Do not spray main rotor hub, tail rotor gearbox vent, hydraulic reservoir vent, swashplate area, or bearing seals with high-pressure water or solvent as water or solvent may cause corrosion or breakdown of lubricants. See RR300 Series Operation and Maintenance Manual (OMM) for engine cleaning instructions and precautions.

2. Inspect tail rotor blades per § 64-30; inspect trailing edges for buckling, and leading edges for bending. If either blade is damaged, remove tail rotor assembly per § 64-10 and tail rotor gearbox per § 65-40 and return components to RHC.
3. Perform tail rotor drive shaft runout per § 65-21. If runout exceeds 0.025 inch at any location:
   a. Remove tail rotor drive shaft assembly per § 65-20 and return drive shaft to RHC.
   b. Visually inspect F193-2 hanger and F172-3 (bearing) housing for cracks or deformation.
   c. Replace C947-3 plate assemblies (forward, intermediate, and aft).

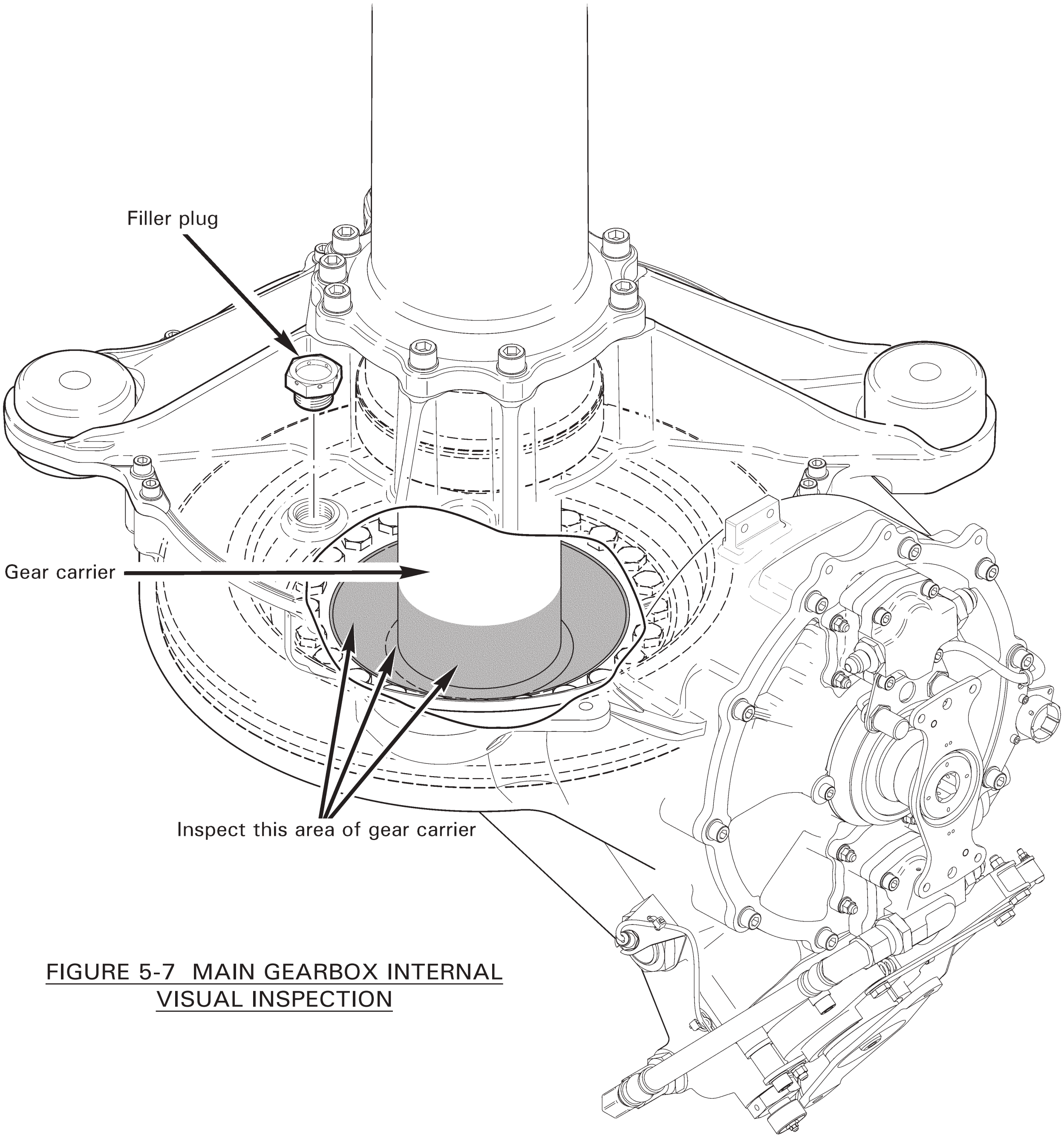

FIGURE 5-7 MAIN GEARBOX INTERNAL VISUAL INSPECTION

5-74 Main Rotor Gearbox Internal Visual Inspection

1. Refer to Figure 5-7. Gain access to and remove main gearbox filler plug.
2. Via filler plug hole and using borescope, miniature camera, or smartphone camera with flash, visually inspect specified area of gear carrier. Rotate gearbox by hand-turning main or tail rotor as required to view entire circumference.
3. If no corrosion or paint bubbling is evident, install filler plug & special torque per § 20-33.
4. If corrosion or paint bubbling is detected, contact RHC Technical Support.

5-75 Inspection After Stabilizer Damage

For damage to an installed C042-1 upper vertical stabilizer, C043-1 lower vertical stabilizer, and/or C044 horizontal stabilizer that results in denting, tearing, or cracking of stabilizer metal, or if a tail skid strike has occurred, perform the following:

1. On associated tailcone's aft C148 bulkhead, strip paint from cross-hatched surfaces shown in Figure 5-8 using § 20-71 approved materials.
2. Perform fluorescent penetrant inspection (FPI) per § 20-42 of stripped surfaces. Replace tailcone if crack is indicated.
3. Conversion coat bare aluminum per § 20-51, as required. Epoxy prime (chromated-epoxy primer preferred) & topcoat stripped surfaces per § 20-60.

> NOTE
>
> Do not apply primer or topcoat to tail rotor gearbox attachment surfaces.

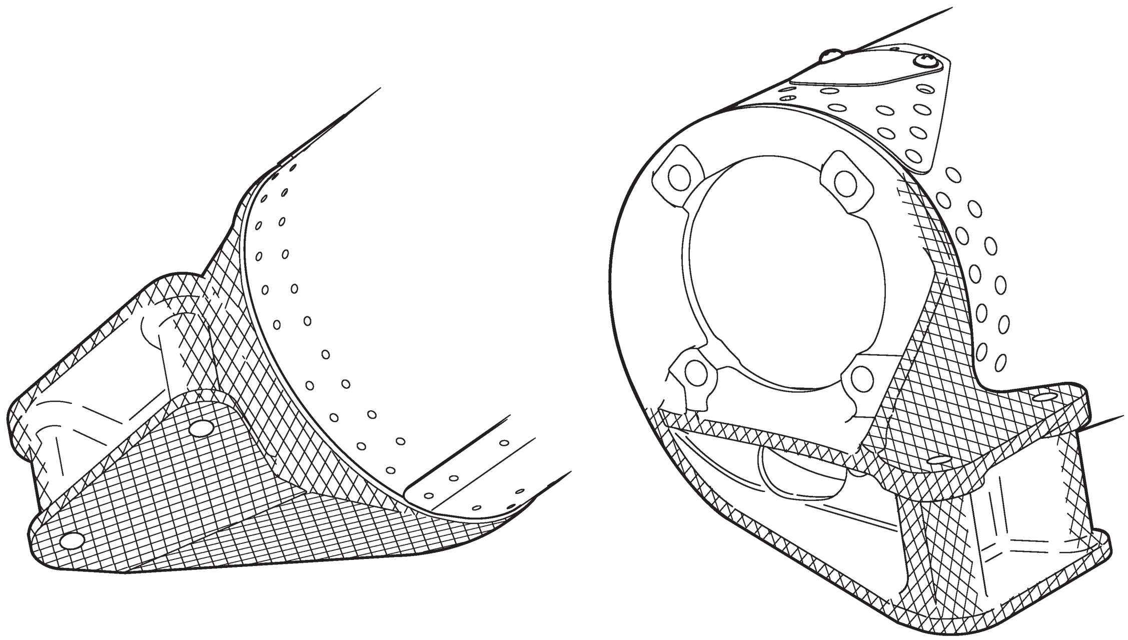

FIGURE 5-8 CROSS-HATCHED SURFACES OF TAILCONE'S AFT BULKHEAD

CHAPTER 6

DIMENSIONS AND DESCRIPTIONS

Section *Title* *Page*

6-10 Version Description 6.1
6-20 Datum 6.1
6-30 Method of Measurement 6.1
6-40 External Dimensions 6.2
6-50 Baggage Compartment Dimensions 6.4
6-60 Station Diagrams 6.6
6-61 Fuselage Station (FS) Locations 6.6
6-62 Tailcone Station (TS) Locations 6.7
6-63 Water Line (WL) Station Locations 6.8
6-64 Butt Line (BL) Station Locations 6.9
6-70 Access and Inspection Panels 6.10
6-71 B526 Screws and B527-08 Washers 6.10
6-80 Antenna Locations 6.11

CHAPTER 6

DIMENSIONS AND DESCRIPTIONS

6-10 Version Description

Type Certificate Data Sheet (TCDS) R00015LA is available at FAA Dynamic Regulatory System website: https://drs.faa.gov.

R66, Turbine: Five place, single-engine, single main rotor, light turbine helicopter. Two-bladed teetering main rotor system with conventional two-bladed tail rotor. Rolls-Royce model 250-C300/A1 turboshaft engine normally rated at 300 shaft horsepower (SHP); 270 SHP 5-minute take-off rating. Maximum gross weight 2700 pounds. Primary fuel is Jet-A (see R66 Pilot's Operating Handbook); 74.6 US gallon fuel tank capacity.

6-20 Datum

The datum is located 100 inches forward of main rotor centerline.

6-30 Method of Measurement

Fuselage station, tailcone station, water line station, and butt line station values are measured in inches, rounded to the nearest hundredth.

6-40 External Dimensions

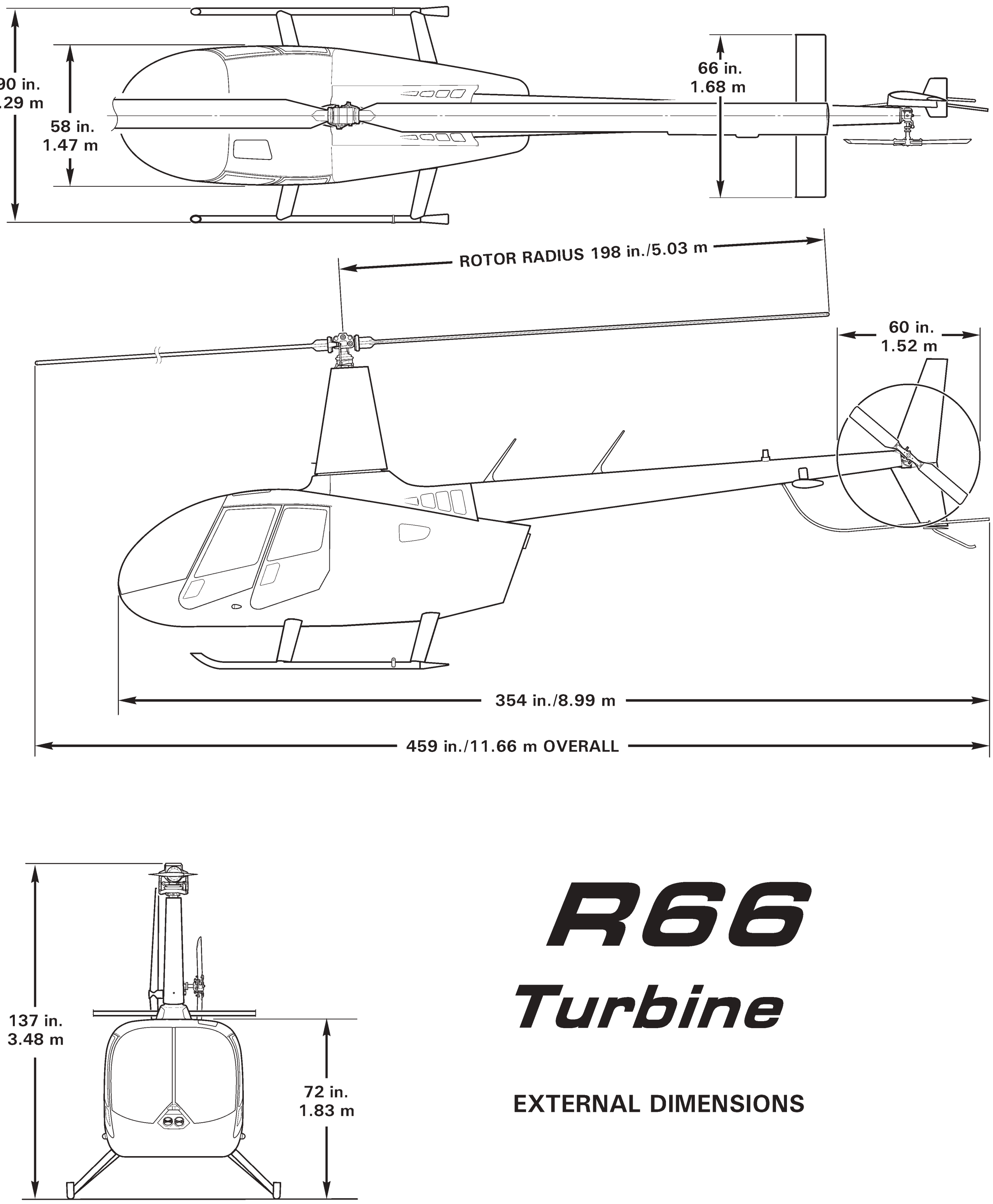

R66

Turbine

EXTERNAL DIMENSIONS

FIGURE 6-1 EXTERNAL DIMENSIONS
(F004-2 empennage installed)

6-40 External Dimensions (continued)

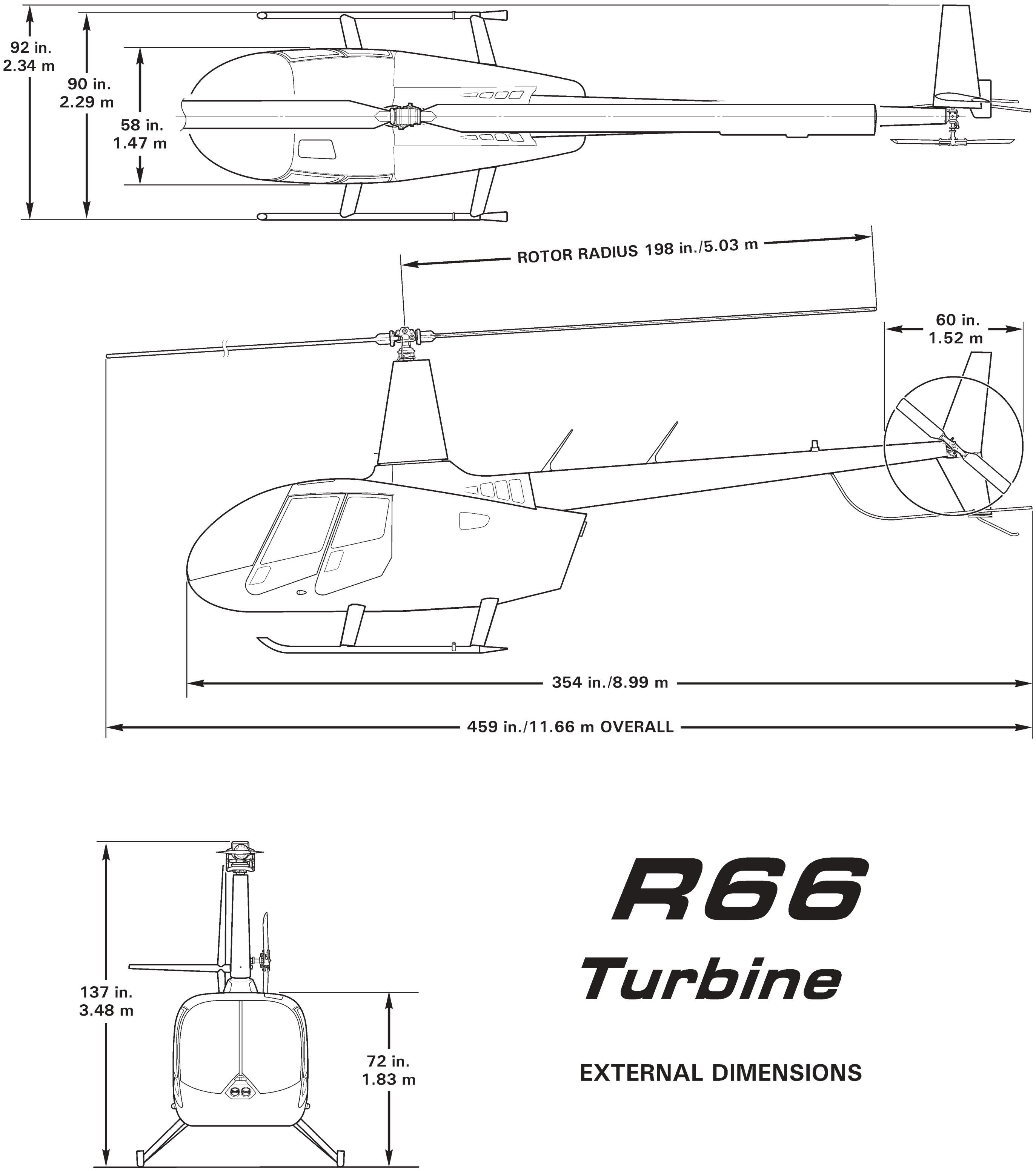

FIGURE 6-1A EXTERNAL DIMENSIONS
(C004-2 empennage installed)

6-50 Baggage Compartment Dimensions

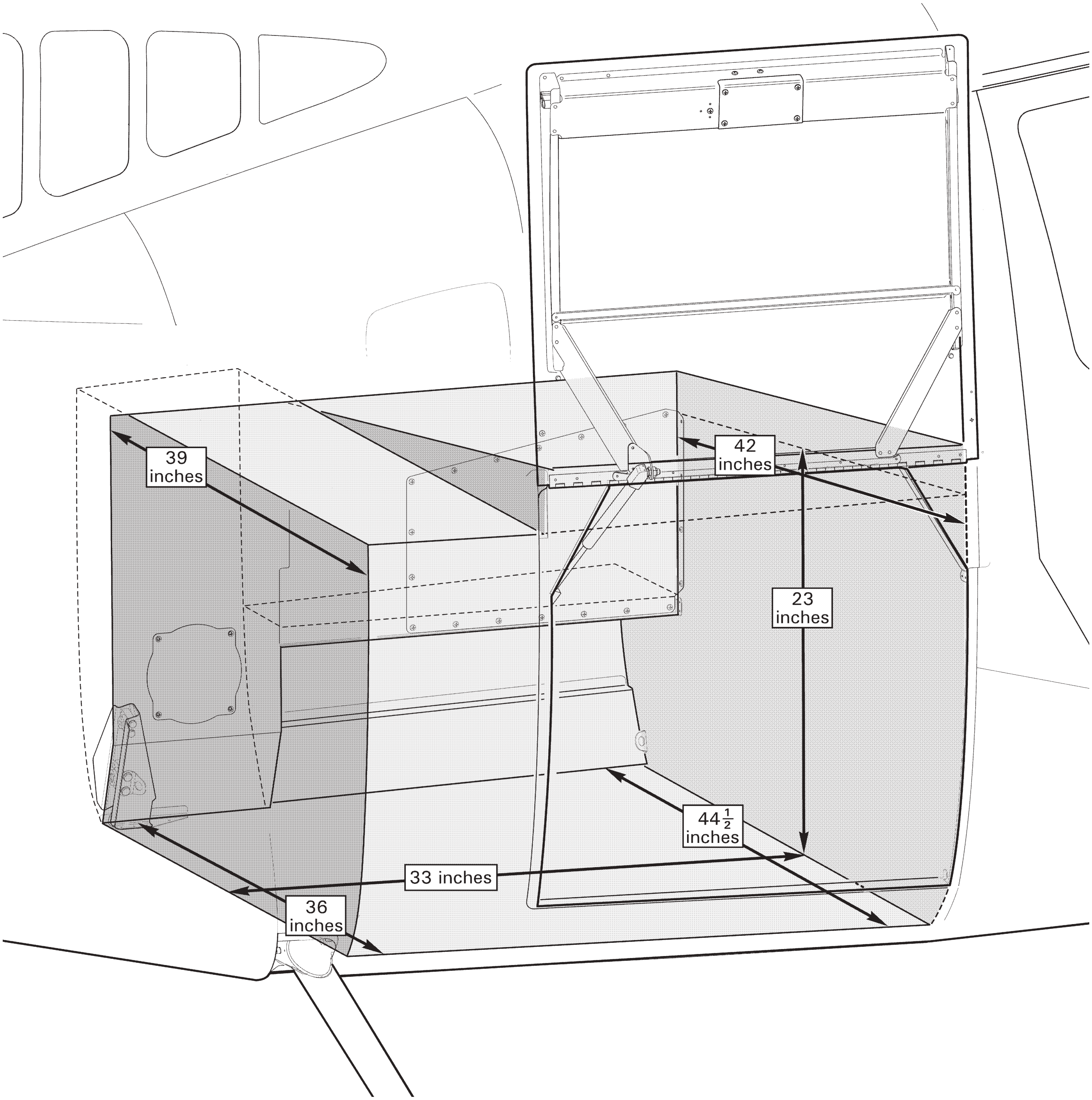

FIGURE 6-2 BAGGAGE COMPARTMENT INTERIOR DIMENSIONS
(Dimensions given are approximate)

6-50 Baggage Compartment Dimensions (continued)

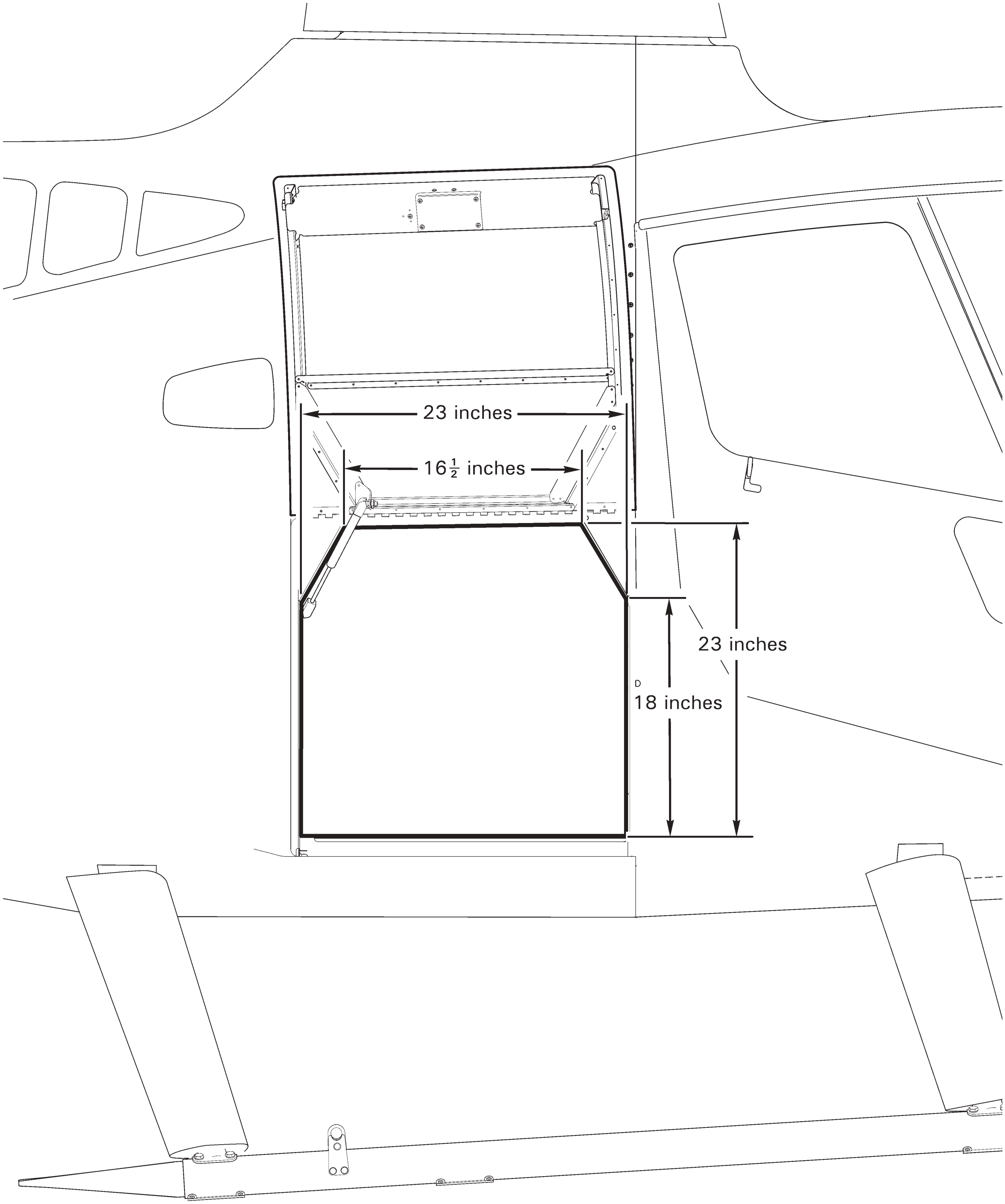

FIGURE 6-3 BAGGAGE COMPARTMENT ACCESS DIMENSIONS
(Dimensions given are approximate)

6-60 Station Diagrams

6-61 Fuselage Station (FS) Locations

1	Datum	FS 0.00
2	Nose Bracket (tie-down)	FS 2.36
3	Ground Handling Ball (center point, bottom)	FS 32.67
4	Seat Box Assembly - Forward (front wall)	FS 39.50
5	Seat Box Assembly - Aft (front wall)	FS 69.30
6	Cross Tube - Forward (centerline, at strut)	FS 71.56
7	Baggage Compartment (forward wall)	FS 92.00
8	Main Rotor Drive Shaft (centerline)	FS 100.00
9	Fuel Cell - Structure (aft wall)	FS 115.00
10	Engine Firewall - Vertical	FS 125.00
11	Cross Tube - Aft (centerline, at strut)	FS 127.35
12	Skid Extension (aft edge)	FS 134.78
13	Engine Cowling (aft point)	FS 171.45

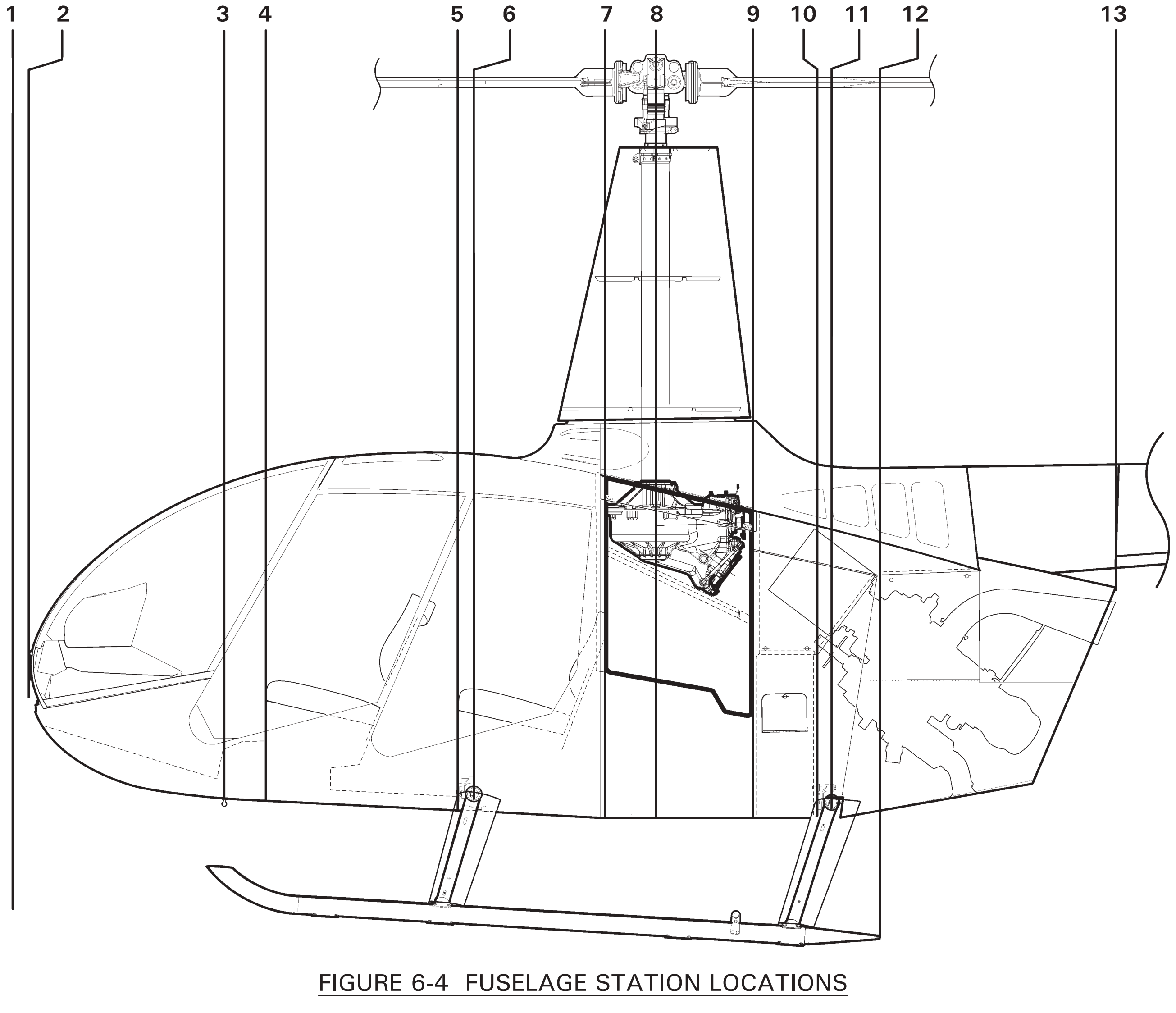

FIGURE 6-4 FUSELAGE STATION LOCATIONS

6-62 Tailcone Station (TS) Locations

NOTE

Typical angle between tailcone station lines & skin aft edges is $4°30'$ from longitudinal centerline. Forward edge of C023-6 skin & aft edge of C023-12 skin are (true) tailcone station lines.

1	Forward Edge C023-6 Skin	TS 0.00
2	Aft Edge C023-6 Skin & Tailcone Centerline Intersection	TS 25.00
3	Aft Edge C023-7 Skin & Tailcone Centerline Intersection	TS 51.00
4	Aft Edge C023-8 Skin & Tailcone Centerline Intersection	TS 74.00
5	Aft Edge C023-9 Skin & Tailcone Centerline Intersection	TS 98.00
6	Aft Edge C023-10 Skin & Tailcone Centerline Intersection	TS 122.00
7	Aft Edge C023-11 Skin & Tailcone Centerline Intersection	TS 146.00
8	Aft Edge C023-12 Skin	TS 177.30
9*	Tail Rotor Gearbox (centerline)	FS 327.00

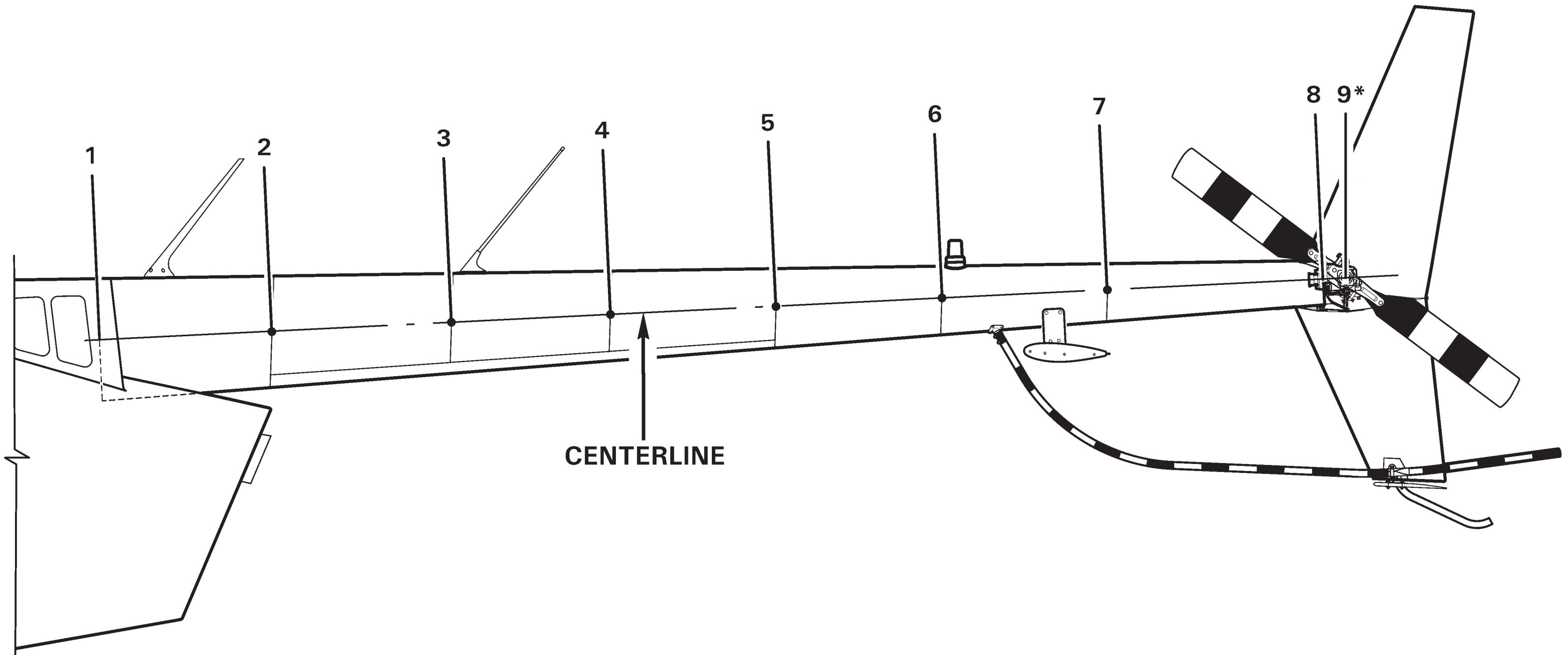

FIGURE 6-5 TAILCONE STATION LOCATIONS

6-63 Water Line (WL) Station Locations

1	Teeter Hinge Bolt (main rotor)	WL 138.00
2	Upper Rib (top)	WL 125.17
3	Middle Rib (top)	WL 104.88
4	Lower Rib (top)	WL 84.59
5*	Tail Rotor Gearbox (centerline)	WL 75.50
6	Main Rotor Gearbox (tail rotor and main rotor drive shaft intersection point)	WL 66.00
7	Baggage Compartment (ceiling, lowest point)	WL 45.60
8	Baggage Compartment (floor)	WL 22.59
9	Belly	WL 20.78
10	Landing Gear	WL 0.79
11	Origin	WL 0.00

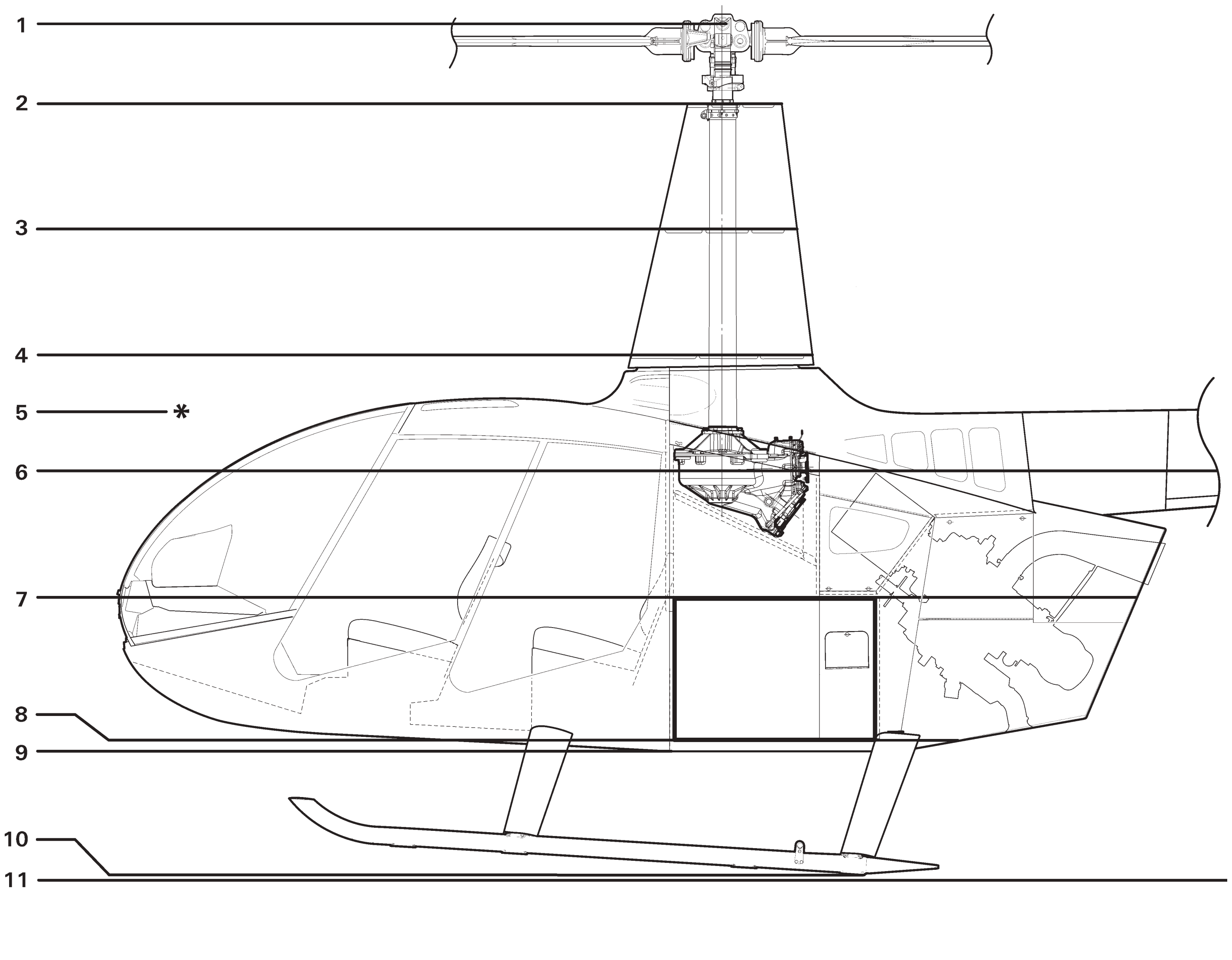

FIGURE 6-6 WATER LINE STATION LOCATIONS

6-64 Butt Line (BL) Station Locations

1	Skid Tube (centerline)	BL 42.00
2	F050-2 Horizontal Stabilizer (outboard point)	BL 33.00
3	Door Post (between forward & aft doors)	BL 28.25
4	Jack Lug/Tab (aft strut assembly)	BL 16.73
5	Ground Handling Ball (jack point)	BL 4.13
6	Origin	BL 0.00
7	Teeter Hinge Bolt (tail rotor)	LBL 11.01
8	Jack Tab (aft strut assembly)	LBL 16.73
9	C044 Horizontal Stabilizer (outboard point)	BL 46.75

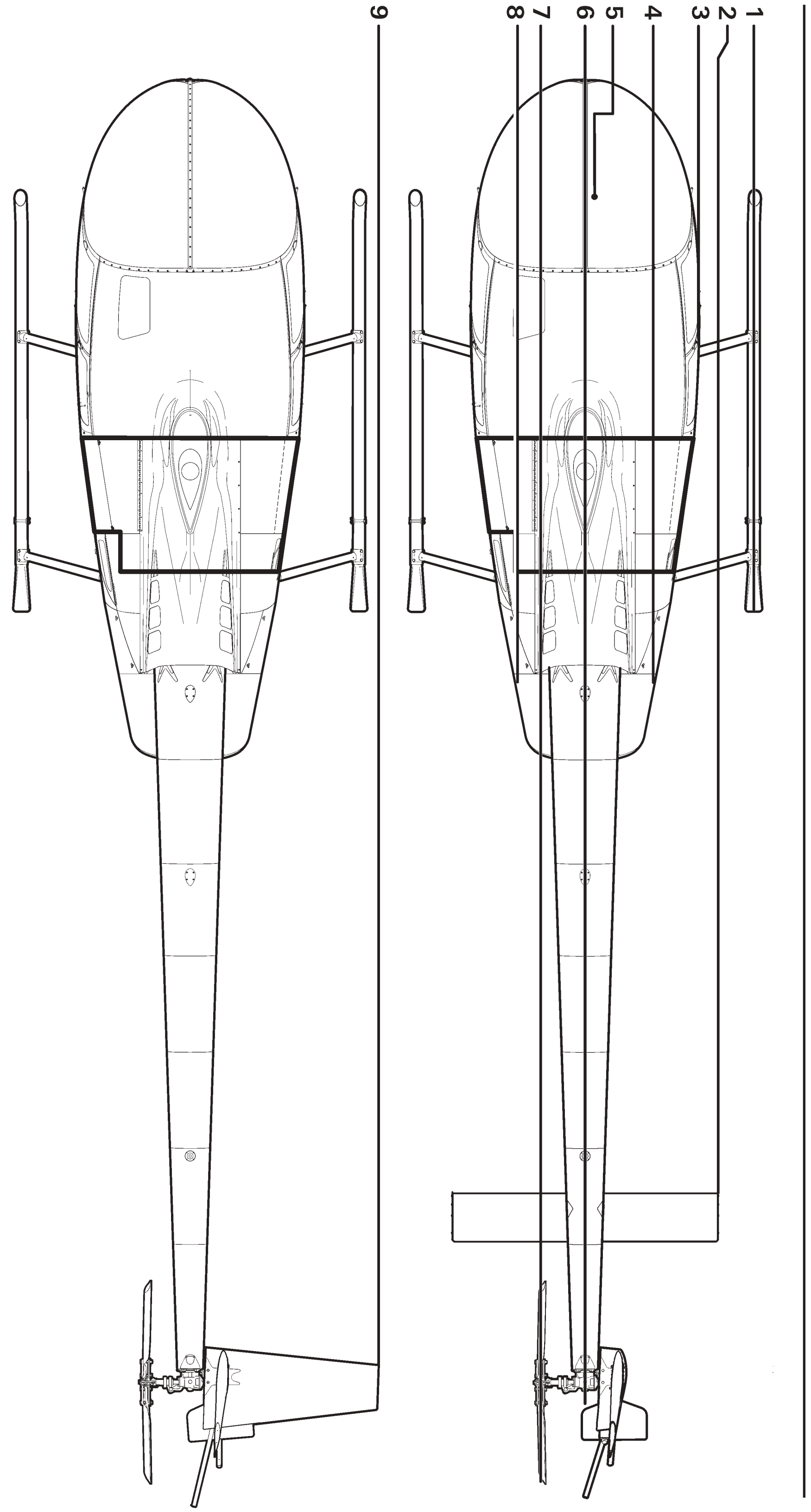

FIGURE 6-7 BUTT LINE STATION LOCATIONS

6-70 Access and Inspection Panels

Refer to R66 Illustrated Parts Catalog Chapter 6 for access and inspection panel locations.

6-71 B526 Screws and B527-08 Washers

B526 (TORX Plus®) truss head screws may be used to secure cowlings and access panels. A B527-08 nylon washer may be used under a B526 screw head to further protect thin or painted surfaces.

Following B526 screws are interchangeable with MS27039C080_ screws used to secure cowlings and access panels:

PART:	INTERCHANGEABLE WITH:
MS27039C0806 screw	B526-6 screw
MS27039C0807 screw	B526-8 screw
MS27039C0808 screw	B526-8 screw

Following B526 screws are interchangeable with AN525-832R_ & AN526C832R_ screws:

PART:	INTERCHANGEABLE WITH:
AN525-832R6 or AN526C832R6 screw	B526-6 screw
AN525-832R7 or AN526C832R7 screw	B526-8 screw
AN525-832R8 or AN526C832R8 screw	B526-8 screw

B526-66 screws (used to secure F952-3 plates to F050-2 stabilizer) are not interchangeable with other screws.

> NOTE
>
> B526 screws are compatible with T20 or 20IP drivers.

6-80 Antenna Locations

ITEM	ANTENNA	MHz	PART NO.
1	Glidescope	—	CI 193
2	ADF	—	KA44B
3	Marker Beacon	—	CI 102
4	RH Belly UHF	400-960	CI 285
5	DME	—	CI 105-16, KA60
	Transponder	—	CI 105-16, KA60
	ADS-B	—	CI 105-16, KA60
6	LH/RH Belly (Ref)	—	See items 8 and 9
7	Transponder	—	CI 105-16, KA60
8	RH Belly FM	138-174	CI 292-3, DM C63-3/A
		450-470	CI 177-20
	RH Belly AM/FM	—	CI 222
	RH Belly FM	403-512	CI 273, CI 272-1, CI 271
9	LH Belly FM	138-174	CI 292-3, DM C63-3/A
		450-470	CI 177-20
		220-225	D721-1
	LH Belly FM	403-512	CI 273, CI 272-1, CI 271
	LH Belly COM	118-136	CI 122
10	NAV	108-118 & 329-335	D20543 (VOR & LOCALIZER)
		108-118 & 329-335	D20543 (VOR & LOCALIZER W/DIPLEXER)
11	ELT	—	AV-300
12	Cowling GPS	—	GA 35
	Cowling XM	—	GA 55
13	Upper Fwd COM	—	CI 121, CI 248-5
	Upper Fwd FM	—	CI 177
	Upper Fwd FM	403-512	CI 273, CI 272-1, CI 271
		800-870	CI 306
	Upper Fwd COM/GPS	—	CI 2580-200
	Upper Fwd GPS	—	GA 35
14	Upper Mid RSM/GPS	—	921-00003-001
	Upper Mid GPS	—	GA 35
15	Upper Aft COM	—	CI 121, CI 248-5
	Upper Aft FM	—	CI 177
	Upper Aft FM	403-512	CI 273, CI 272-1, CI 271
	Upper Aft COM/GPS	—	CI 2580-200
16	Lower Fwd FM	—	CI 177
		800-870	CI 306
	Lower Fwd FM	403-512	CI 273, CI 272-1, CI 271
17	Lower Aft FM	—	CI 177
	Lower Aft VHF	118-136	CI 122
	Lower Aft FM	403-512	CI 273, CI 272-1, CI 271
		800-870	CI 306
18	NAV	108-118 & 329-335	D20543 (VOR & LOCALIZER)
		108-118 & 329-335	D20543 (VOR & LOCALIZER W/DIPLEXER)
19	Cowling GPS*	—	GA 35

*Earlier aircraft.

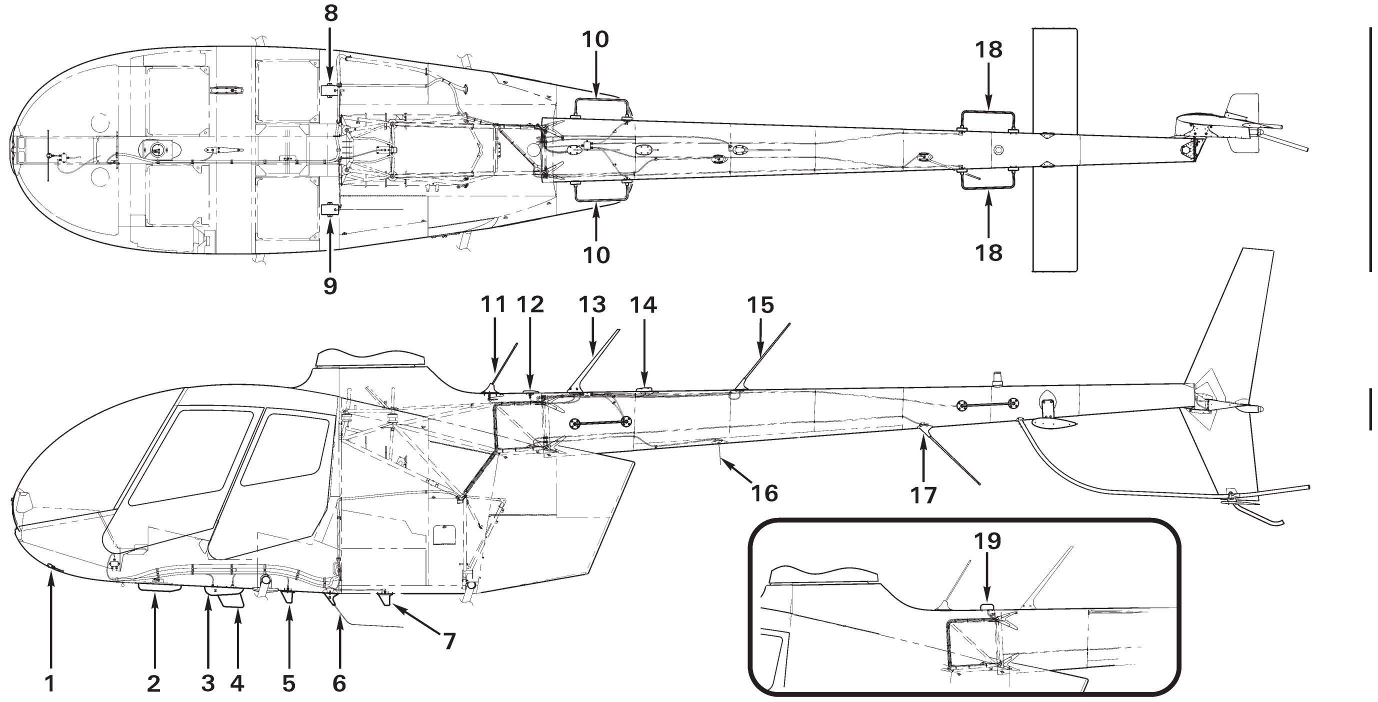

F850 REV K

FIGURE 6-10 ANTENNA LOCATIONS

Intentionally Blank

CHAPTER 7

JACKING AND HOISTING

Section	*Title*	*Page*
7-10	Jacking	7.1
7-20	Hoisting	7.5

Intentionally Blank

CHAPTER 7

JACKING AND HOISTING

7-10 Jacking

CAUTION

When jacking helicopter, use mechanical or locking hydraulic jacks, when available. Unlocked hydraulic jacks are subject to pressure-loss which can affect critical measurements during leveling or cause a raised helicopter to become unstable.

CAUTION

Never jack helicopter in windy conditions.

CAUTION

Perform jacking on a clean, flat, hard surface free of water, oil, solvent, grease, or residue that could cause equipment or personnel to slip during jacking procedure.

CAUTION

Do not actuate jacks from underneath helicopter. Remain clear of landing gear skid tubes when helicopter is raised.

A. Jacking

1. Refer to Figure 7-1. Place one (appropriate capacity) jack under each (landing gear) aft strut assembly jack lug/tab and under the ground handling ball. Install jacking point adapters as required.

CAUTION

Ground handling ball must slide unrestricted across a flat surface during jacking. When weighing, verify ball is not under side load which could produce an erroneous weight indication.

2. Position jack levers for convenient access and engage jacks at lugs/tabs and ball. Sandbag jacks for increased stability, as required.

3. Actuate jacks slowly and simultaneously (one person per jack recommended), maintaining helicopter stability. Raise helicopter to required height.

CAUTION

Minimize personnel movement around raised helicopter.

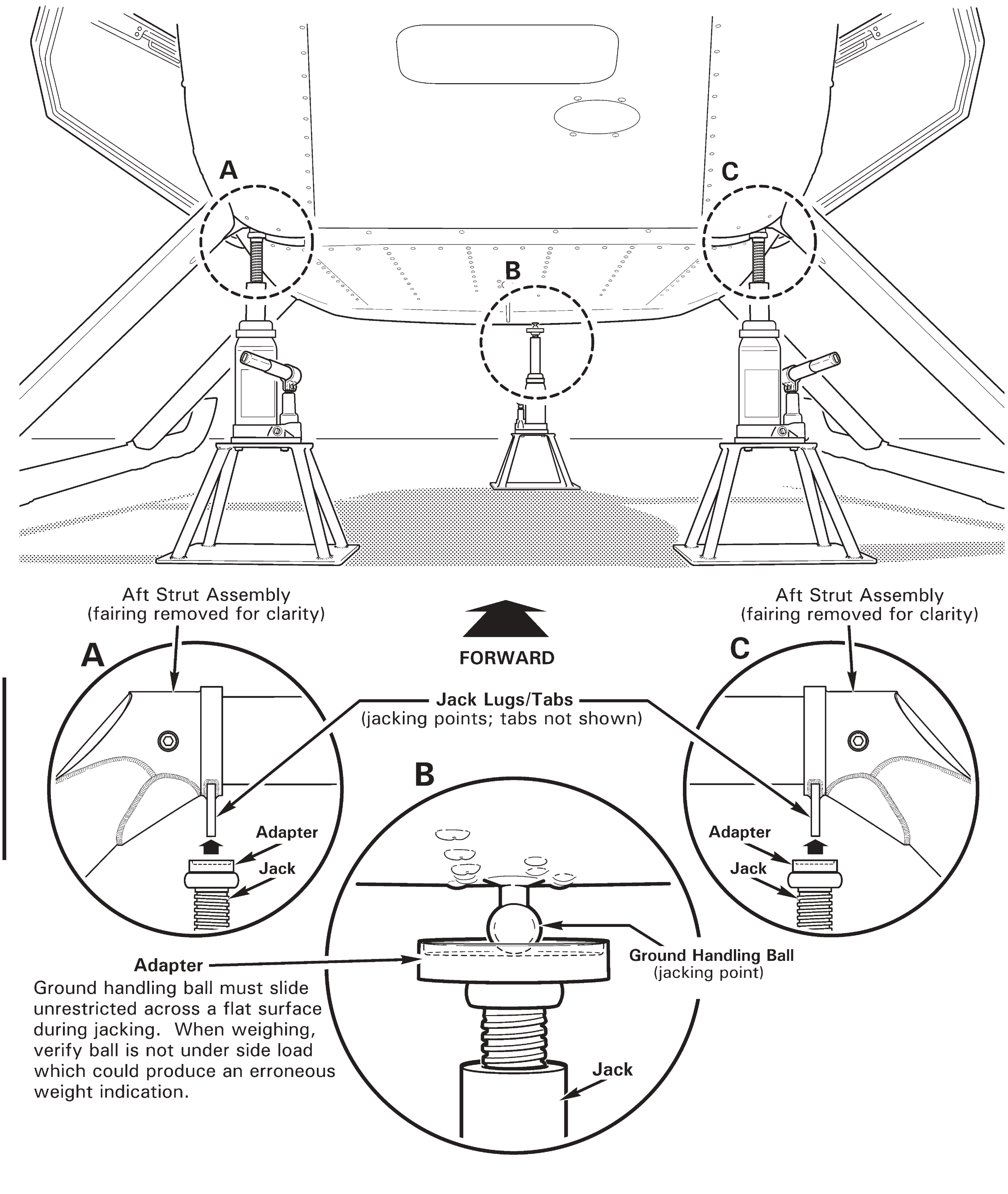

FIGURE 7-1 JACKING

7-10 Jacking (continued)

B. Lowering

> **CAUTION**
>
> Skids spread as aircraft weight settles on landing gear.

1. Refer to Figure 7-1. Slowly and simultaneously (one person per jack recommended) lower each jack ram, maintaining helicopter stability. Lower aircraft to ground.

2. Clear jacks from lugs/tabs and ball, and clear equipment from area.

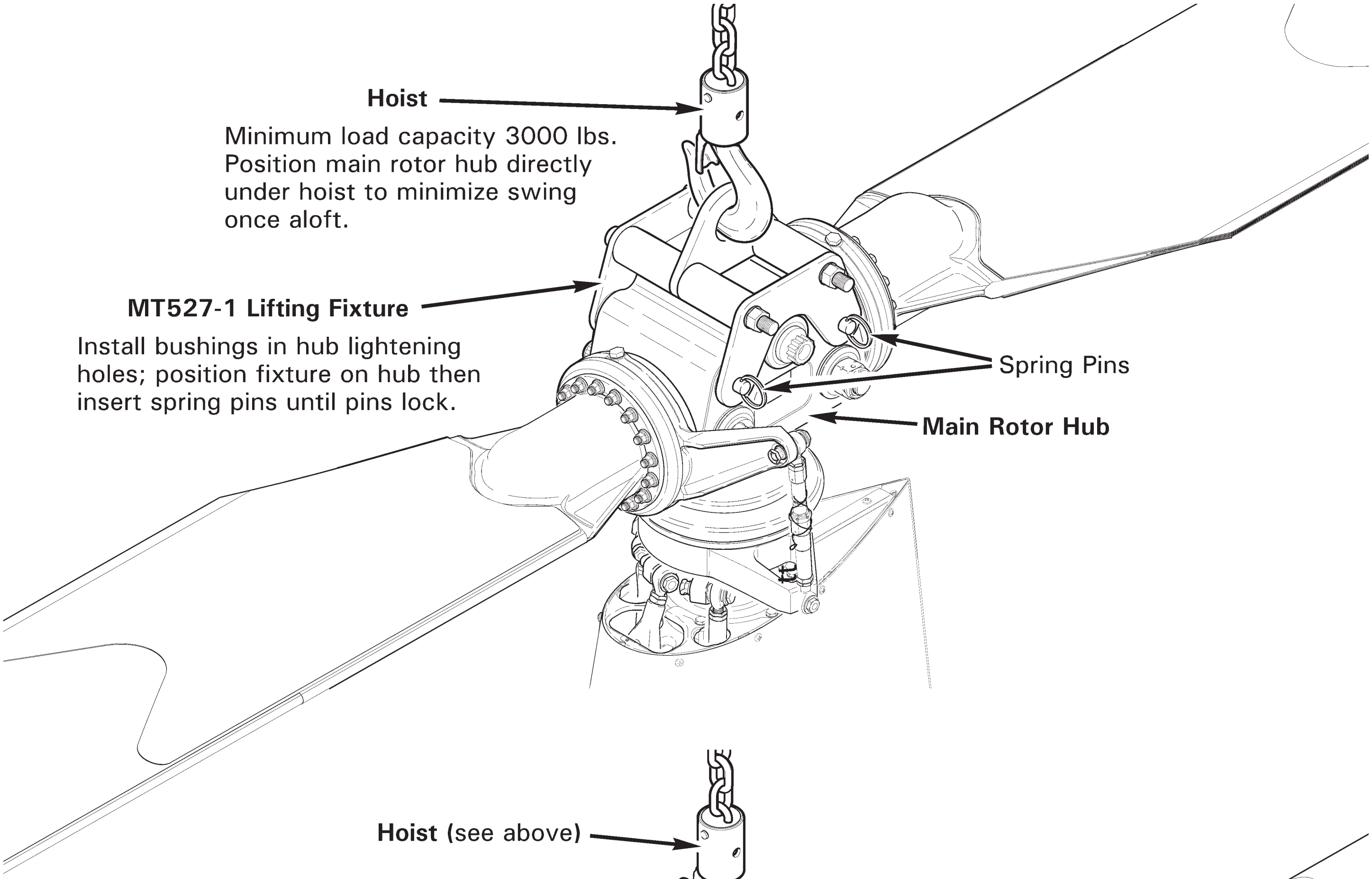

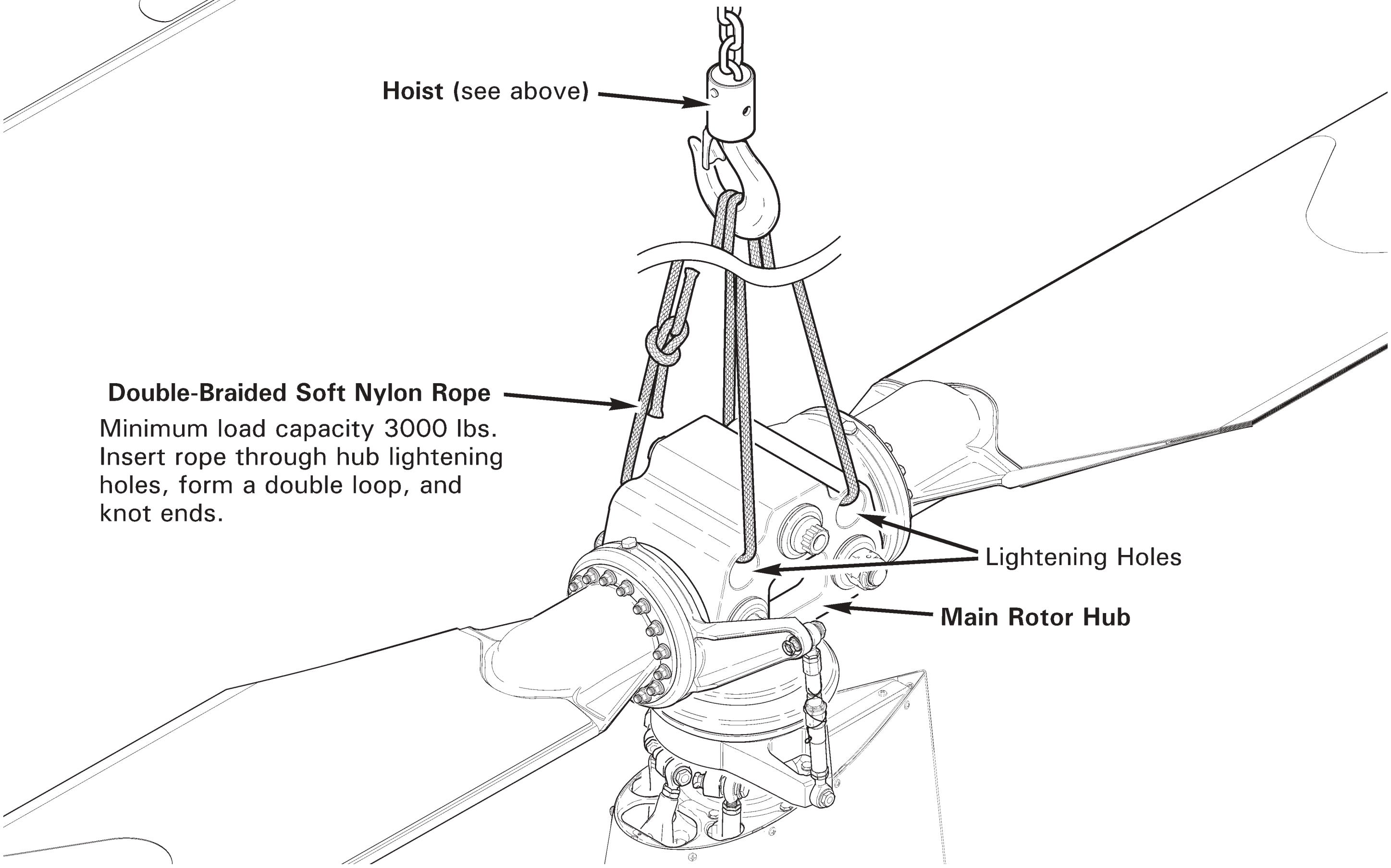

FIGURE 7-2 HOISTING

7-20 Hoisting

CAUTION
Avoid hoisting helicopter in windy conditions.

CAUTION
Verify ground is free of water, oil, solvent, grease, or residue that could cause equipment or personnel to slip during hoisting procedure.

CAUTION
Remain clear of area beneath helicopter when helicopter is raised. Minimize personnel movement around raised helicopter.

A. Hoisting with Lifting Fixture

1. Refer to Figure 7-2. Verify hoisting equipment has minimum load capacity of 3000 lbs.
2. Position main rotor hub directly under hoist to minimize helicopter swing once aloft.
3. Remove two spring pins and four nylon bushings from MT527-1 lifting fixture and install bushings in main rotor hub lightening holes. Position lifting fixture on hub then insert spring pins through fixture and bushings until pins lock. Verify security.
4. Connect hoist to lifting fixture. Verify security.
5. Stabilize helicopter as required by guiding tail skid, but do not exert force (tail skid is secondary structure). Raise helicopter to required height.

B. Hoisting with Nylon Rope

1. Refer to Figure 7-2. Verify hoisting equipment has minimum load capacity of 3000 lbs. Verify minimum work load limit for 1-inch diameter twisted or double braided (preferred) soft nylon rope is 3000 lbs.
2. Position main rotor hub directly under hoist to minimize helicopter swing once aloft.
3. Insert rope through main rotor hub lightening holes, form a double loop, and knot ends. Connect hoist to nylon rope. Verify security.
4. Stabilize helicopter as required by guiding tail skid, but do not exert force (tail skid is secondary structure). Raise helicopter to required height.

7-20 Hoisting (continued)

C. Lowering

> **CAUTION**
>
> Skids spread as aircraft weight settles on landing gear.

1. Refer to Figure 7-2. Stabilize helicopter as required by guiding tail skid, but do not exert force (tail skid is secondary structure). Slowly lower aircraft to ground.

2. Disconnect hoisting equipment, remove lifting fixture or nylon rope from main rotor hub, and clear equipment from area.

CHAPTER 8

WEIGHT AND BALANCE

Section	Title	Page
8-10	Leveling	8.1
8-11	Leveling for Weight and Balance	8.1
8-12	Leveling for Rigging	8.3
8-20	Weighing	8.5
8-21	Preparing Helicopter for Weighing	8.5
8-22	Weighing Procedure and Calculations	8.7
8-30	Fixed Ballast	8.11
8-31	Nose Ballast	8.11
8-32	Empennage Ballast	8.12

Intentionally Blank

CHAPTER 8

WEIGHT AND BALANCE

8-10 Leveling

NOTE
Perform leveling and weighing in a zero-wind environment.

NOTE
Verify spirit level is calibrated by placing level on a designated surface and noting bubble position. Rotate spirit level 180°; verify bubble is in the same position.

8-11 Leveling for Weight and Balance

NOTE
Main rotor blade position does not affect weight and balance calculations.

1. Jack helicopter per Section 7-10.
2. Refer to Figure 8-1. Place a spirit level laterally on F463-1 aft tunnel cover. Verify cover is flat; if cover is not flat, remove cover and place spirit level across keel panel flanges.
3. Adjust jacks at (landing gear) aft strut assembly jack lugs/tabs until helicopter is level laterally.
4. Position spirit level longitudinally on aft tunnel cover, or atop left or right keel panel if cover is removed. Adjust jack under ground handling ball until helicopter is level longitudinally.

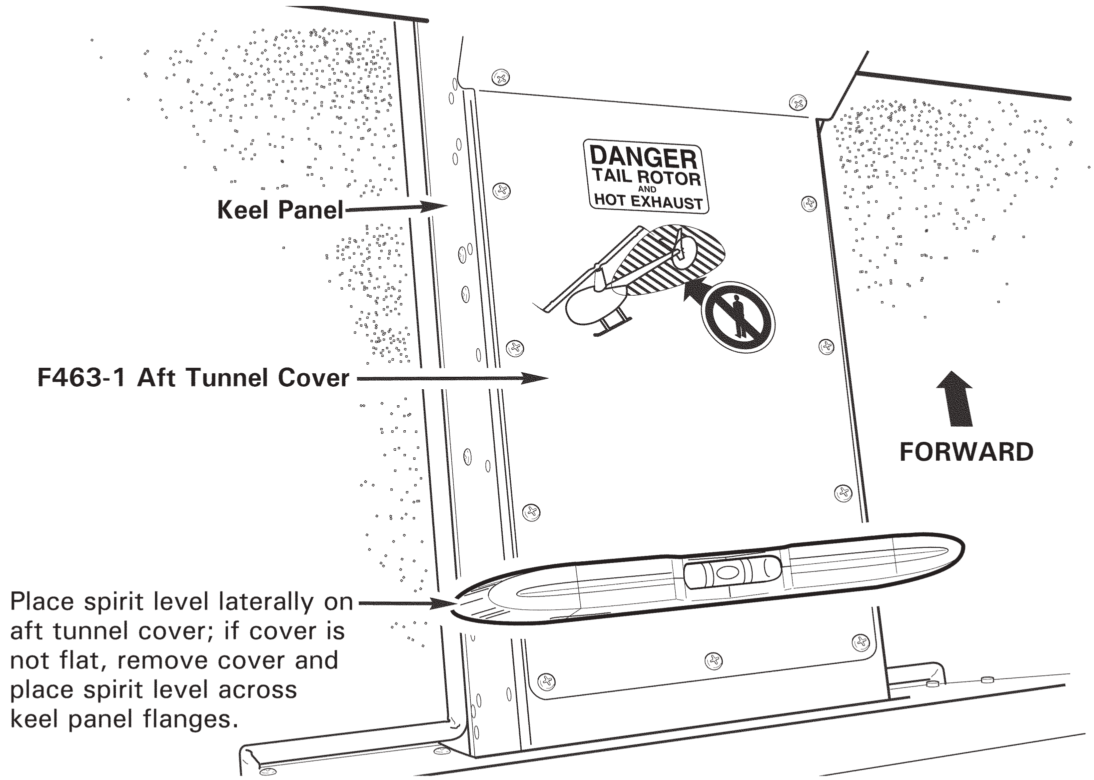

FIGURE 8-1 LEVELING FOR WEIGHT AND BALANCE
(Lateral shown; view looking down between aft seat footwells)

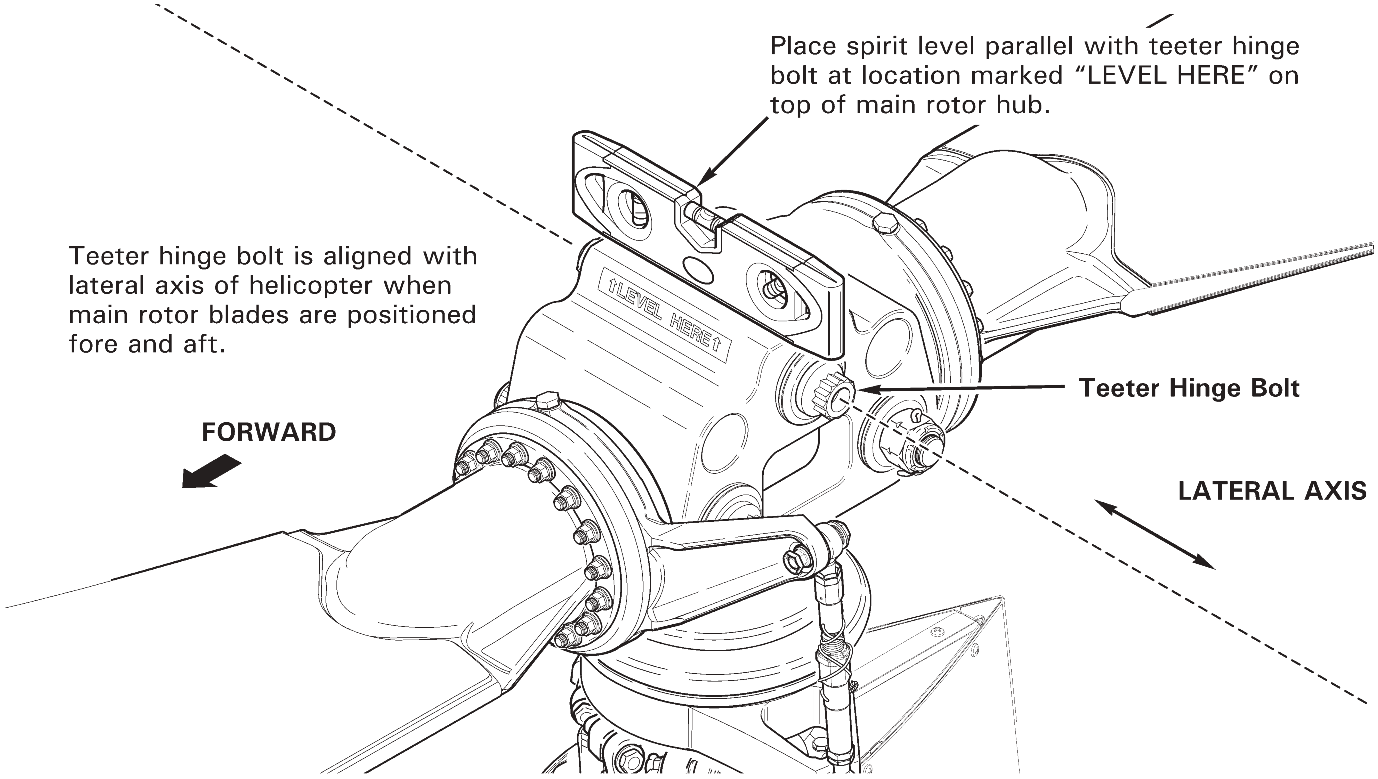

FIGURE 8-2 LEVELING FOR RIGGING
(Lateral shown)

8-12 Leveling for Rigging

1. Refer to Figure 8-2. Place cyclic stick in vertical position and apply cyclic friction. Position main rotor blades approximately fore and aft and apply rotor brake. (Teeter hinge bolt is aligned with lateral axis of helicopter.)

2. Jack helicopter per Section 7-10.

3. Place a spirit level parallel with teeter hinge bolt at location marked "LEVEL HERE" on top of main rotor hub.

4. Adjust jack at (landing gear) aft strut assembly jack lugs/tabs until helicopter is level laterally.

5. Release rotor brake and rotate main rotor until teeter hinge bolt is aligned with longitudinal axis of the helicopter. Apply rotor brake. Verify cyclic stick is in vertical position with friction applied.

6. Adjust jack under ground handling ball until helicopter is level longitudinally. Remove spirit level.

Intentionally Blank

8-20 Weighing

Reweigh helicopter when helicopter empty weight and empty weight center of gravity have been modified and if the accuracy of additional calculations is suspect.

Maintain a continuous record of the helicopter's weight and balance using the Weight and Balance Record in R66 Pilot's Operating Handbook (POH) Section 6.

NOTE

Verify scales are calibrated. Operate scales according to scale manufacturer's instructions.

NOTE

Never weigh the helicopter in the wind. Weigh helicopter on a flat, hard surface in a zero-wind environment for accurate scale readings.

8-21 Preparing Helicopter for Weighing

1. Defuel helicopter per Section 12-42.
2. Service engine oil, hydraulic fluid, and main & tail rotor gearboxes per Chapter 12.
3. Clean aircraft per Section 20-10. Ensure helicopter is completely dry prior to weighing.
4. Remove foreign objects from baggage compartments and stowage areas.
5. Verify cowlings, removable panels, cabin doors, removable controls, and R66 Pilot's Operating Handbook (POH) are installed.
6. Verify Equipment List/Weight and Balance Data sheet (RF 134) and modifications recorded in the Weight and Balance Record correspond with installed equipment and recorded equipment locations.

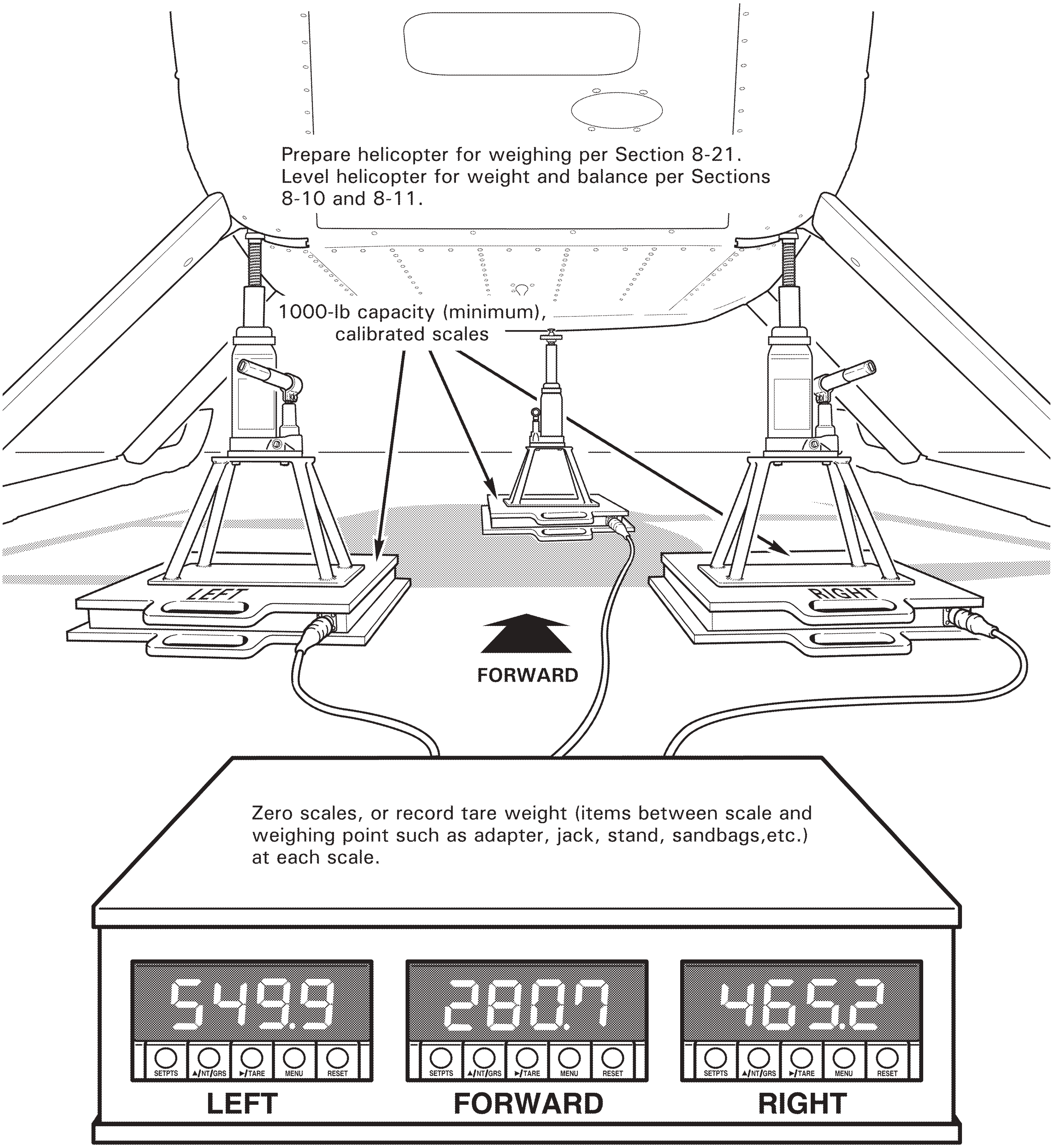

FIGURE 8-3 WEIGHING
(Scale indications for demonstration only)

8-22 Weighing Procedure and Calculations

NOTE

- Arm is the distance in inches from datum.
- Datum is located 100 inches forward of main rotor centerline.
- CG (arm) is determined by dividing total moment by total weight.

1. Refer to Section 8-20. Prepare helicopter for weighing per Section 8-21.

2. Refer to Figure 8-3. Place a jack and one 1000-lb capacity (minimum) scale under each (landing gear) aft strut assembly jack lug/tab and under the ground handling ball.

3. Zero scales, or record tare weight (items between scale and weighing point such as adapter, jack, stand, sandbags, etc.) at each scale.

4. Level helicopter for weight and balance per Sections 8-10 and 8-11. Remove spirit level. If removed, carefully replace F463-1 aft tunnel cover, unsecured, on top of keel panels.

5. Calculate net weights:

Weighing Point	Scale Indication		Tare Weight		Net Weight
Forward:	________	–	________	=	________ lb
Left:	________	–	________	=	________ lb
Right:	________	–	________	=	________ lb

8-22 Weighing Procedure and Calculations (continued)

6. Calculate weight and CG per the following table. Adjust ballast per steps 6b thru 6e as required until calculated CG is between 101.50 and 102.50 per step 6a.

Item	Weight (lb)		Longitudinal CG (arm, inches)		Moment (in.-lb)
Forward Net:	______	x	32.67	=	______
Left Net:	______	x	127.35	=	______
Right Net:	______	x	127.35	=	______
Pilot (right forward seat; add):	160.00	x	49.00	=	7840.00
Unusable fuel (add):	6.70	x	110.40	=	739.68
Calculated weight and CG:	______		______		______

a. If Calculated CG is between 101.50 and 102.50, (additional) ballast is not required. Proceed to step 7.

b. If Calculated CG is less than 101.50 and nose ballast is not installed, install empennage ballast per Section 8-32. Reweigh helicopter and calculate new weight and CG per the previous steps.

c. If Calculated CG is less than 101.50 and nose ballast is installed, determine (minimum) nose ballast to remove:

$$\frac{(102.50 - \text{Calculated CG}) \times \text{Calculated weight}}{97.35} = \underline{\qquad\qquad} \text{ lb}$$

Round down to nearest 0.25 lb. Remove nose ballast per Section 8-31. Reweigh helicopter and calculate new weight and CG per the previous steps.

d. If Calculated CG is greater than 102.50 and empennage ballast is installed, remove empennage ballast per Section 8-32. Reweigh helicopter and calculate new weight and CG per the previous steps.

e. If Calculated CG is greater than 102.50 and empennage ballast is not installed, determine (minimum) additional nose ballast required:

$$\frac{(\text{Calculated CG} - 102.50) \times \text{Calculated weight}}{97.35} = \underline{\qquad\qquad} \text{ lb}$$

Round up to nearest 0.25 lb. Install nose ballast per Section 8-31. Reweigh helicopter and calculate new weight and CG per the previous steps.

7. Lower helicopter per Section 7-10. Secure aft tunnel cover.

8-22 Weighing Procedure and Calculations (continued)

8. Calculate basic empty weight and longitudinal CG:

Item	Weight (lb)		Longitudinal CG (arm, inches)		Moment (in.-lb)
Forward Net:	____	x	32.67	=	____
Left Net:	____	x	127.35	=	____
Right Net:	____	x	127.35	=	____
Unusable fuel (add):	6.70	x	110.40	=	739.68
Basic empty weight and longitudinal CG:	____		____		____

9. Calculate basic empty weight and lateral CG:

Item	Weight (lb)		Lateral CG (arm, inches)		Moment (in.-lb)
Forward Net:	____	x	4.13	=	____
Left Net:	____	x	– 16.73	=	____
Right Net:	____	x	16.73	=	____
Unusable fuel (add):	6.70	x	– 20.70	=	– 138.69
Basic empty weight and lateral CG:	____		____		____

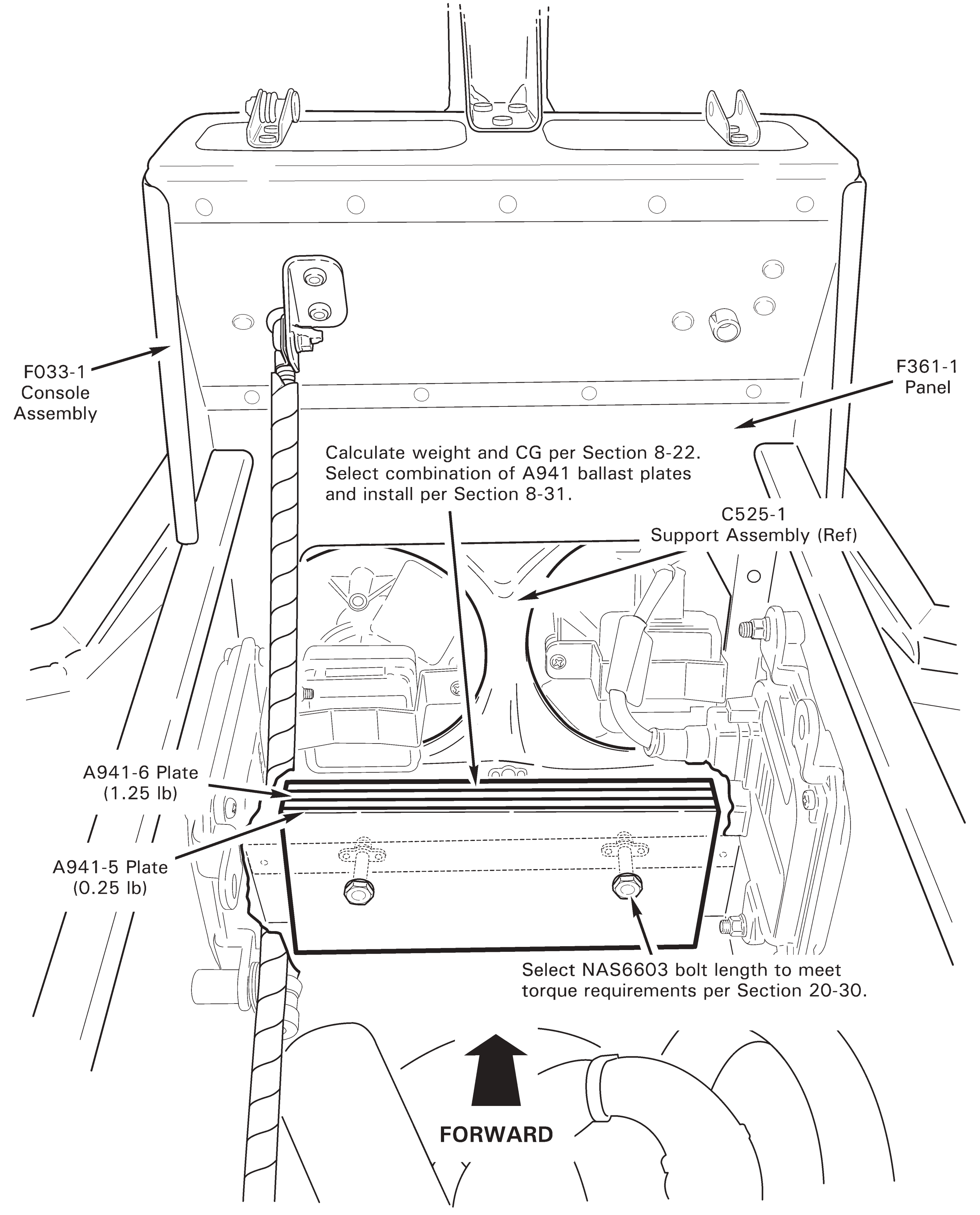

FIGURE 8-4 NOSE BALLAST
(View inside lower console assembly with upper console hinged aft)

8-30 Fixed Ballast

8-31 Nose Ballast

NOTE

Maximum allowable nose ballast is 15.00 lb.

CAUTION

Changing fixed ballast amount affects helicopter empty weight & center of gravity (CG). If helicopter empty weight & CG historical data is suspect, weigh helicopter per § 8-22.

1. Open or remove console assembly per § 95-50.
2. Refer to Figure 8-4. Remove hardware securing A941-5 or -6 ballast plate(s), if installed, to F361-1 panel.
3. Remove or install ballast plates per calculations performed in § 8-22. Select NAS6603 bolt length to meet torque requirements per § 20-30 Part E. Install hardware, standard torque bolts per § 20-32, and torque stripe per Figure 5-1.
4. Install or close console assembly per § 95-50. Verify security.
5. Reweigh and/or calculate basic empty weight and CG per § 8-22.
6. Revise Weight and Balance Record in R66 Pilot's Operating Handbook (POH) Section 6 to reflect ballast removal or installation using the following data:

Item	Weight	Longitudinal Arm	Longitudinal Moment	Lateral Arm	Lateral Moment
Nose ballast	0–15.00 lb	5.15 in.	Variable	0.00 in.	0.00 in.-lb

8-32 Empennage Ballast

> NOTE
>
> Approved materials are listed in § 20-70.

> **CAUTION**
>
> Changing fixed ballast amount affects helicopter empty weight & center of gravity (CG). If helicopter empty weight & CG historical data is suspect, weigh helicopter per § 8-22.

A. Removal

> **CAUTION**
>
> Maximum allowable empennage ballast is 9.0 lb (except Police and E.N.G. Versions). One upper and one lower weight are required. Available combinations provide total weight of 3.0, 6.0, & 9.0 lb.

1. Remove D079-1 tail rotor guard per § 53-50.
2. Leaving NAS6606-78 bolts installed in C004-2, C004-3, or F004-2 empennage assembly, remove palnuts, nuts, washers, and lower D301-2, -4, or -8 ballast weight from empennage assembly.
3. Remove one bolt then rotate upper ballast weight to expose empty bolt hole. Install NAS6606-47 bolt and associated hardware in exposed hole, finger tight (install [1] or [2] NAS1149F0663P washers as required under nut to meet torque requirements per § 20-30 Part E).
4. Remove second bolt & upper ballast weight from empennage assembly. Install NAS6606-47 bolt and associated hardware (install [1] or [2] NAS1149F0663P washers as required under nut to meet torque requirements per § 20-30 Part E). Standard torque bolts securing empennage to C148-5 bulkhead per § 20-32. Install palnuts and standard torque per § 20-32, do not torque stripe at this time.
5. As required, solvent-clean upper & lower surfaces of empennage assembly around and between attach bolts. Apply light coat zinc-chromate or epoxy primer to noted surfaces and hardware. Apply topcoat as desired.
6. Apply torque stripe to hardware per Figure 5-1.
7. Install tail rotor guard per § 53-50.
8. As required, weigh helicopter or calculate basic empty weight & CG per § 8-22.
9. Revise Weight and Balance Record in R66 Pilot's Operating Handbook (POH) Section 6 to reflect ballast removal using Table 8-1.

8-32 Empennage Ballast (continued)

B. Installation

CAUTION

Maximum allowable empennage ballast is 9.0 lb (except Police and E.N.G. Versions). One upper and one lower weight are required. Available combinations provide total weight of 3.0, 6.0, & 9.0 lb.

1. Remove C004-2, C004-3, or F004-2 empennage assembly per § 53-70.
2. Solvent-clean around and between 0.375 inch diameter holes on upper & lower surfaces of F044-1 vertical stabilizers mount assembly or C044-1 or -2 horizontal stabilizer, as applicable.
3. Temporarily position correct combination of two D301-2, -4, or -8 weights on mount assembly (or horizontal stabilizer) using two NAS6606-78 bolts & associated hardware, finger tight.
4. Trace outline of weights onto mount assembly (or horizontal stabilizer) upper & lower surfaces using felt-tip marker or tape. Remove weights.
5. Remove paint within traced outlines on mount assembly (or horizontal stabilizer) using approved stripper (ref. § 20-71), or by block sanding (to maintain flatness) using 320-grit or finer aluminum-oxide abrasive sandpaper.
6. Remove tracing tape, if installed. Solvent-clean bare metal on mount assembly (or horizontal stabilizer) & weight clamping surfaces. Conversion coat upper & lower bare metal surfaces of mount assembly (or horizontal stabilizer) per § 20-51.
7. Apply approved chromated-epoxy primer (ref. § 20-75) per § 20-60 to bare metal clamping surfaces of weights and mount assembly (or horizontal stabilizer). While primer is still wet, install empennage assembly per § 53-70.
8. As required, apply primer and topcoat to exposed hardware.
9. As required, apply A257-18 to O-ring and install two AN814-10D plugs on upper weight only (except D301-2 weights). Special torque plugs per § 20-33 and torques stripe per Figure 5-1.
10. Weigh helicopter or calculate basic empty weight and CG per § 8-22.
11. Revise Weight and Balance Record in R66 Pilot's Operating Handbook (POH) Section 6 to reflect ballast installation using Table 8-1.

Item	Weight	Longitudinal Arm	Longitudinal Moment	Lateral Arm	Lateral Moment
Empennage Ballast	3.0 lb	325.4 in.	976.2 in.-lb	4.45 in.	13.35 in.-lb
	6.0 lb	325.4 in.	1952.4 in.-lb	4.45 in.	26.70 in.-lb
	9.0 lb	325.4 in.	2928.6 in.-lb	4.45 in.	40.05 in.-lb

TABLE 8-1 EMPENNAGE BALLAST WEIGHT AND BALANCE

Intentionally Blank

CHAPTER 9

GROUND HANDLING

Section	Title	Page
9-10	Ground Handling	9.1
9-11	Ground Handling Wheels	9.1
9-12	Moving Helicopter on Ground Handling Wheels	9.3
9-13	Ground Handling Carts	9.3
9-14	Ground Power Start	9.3
9-20	Trailering	9.4

Intentionally Blank

CHAPTER 9

GROUND HANDLING

9-10 Ground Handling

9-11 Ground Handling Wheels

Refer to R66 Illustrated Parts Catalog (IPC) Figure 9-1.

NOTE

R66 ground handling wheels are installed inboard of landing gear skid tubes. C063-5 (LH) and C063-6 (RH) ground handling wheel assemblies are not interchangeable. When wheels are installed and in locked position, both handles point aft.

CAUTION

Handle has a tendency to snap over when raising and lowering the helicopter. Grip handle firmly with both hands during operation.

CAUTION

Remain clear of landing gear skid tubes when helicopter is raised.

WARNING

Remove ground handling wheels for flight.

A. Installation

NOTE

Verify proper inflation of ground handling wheel tires. Maximum tire inflation pressure is 70 psi.

1. Extend ground handling wheel retractable handle by depressing locking pins and sliding handle out until pins engage outer holes. Verify security.

2. Refer to Figure 9-1. Hold ground handling wheel assembly inboard of skid with handle forward, wheel aft, and spindle pointed outboard. Insert spindle completely into skid-mounted support, then pull handle in rearward arc (raises helicopter) until handle is in locked position, parallel with the skid.

3. Repeat steps to install second wheel assembly. Helicopter will rest on skid toes.

1. Insert spindle into skid-mounted support.

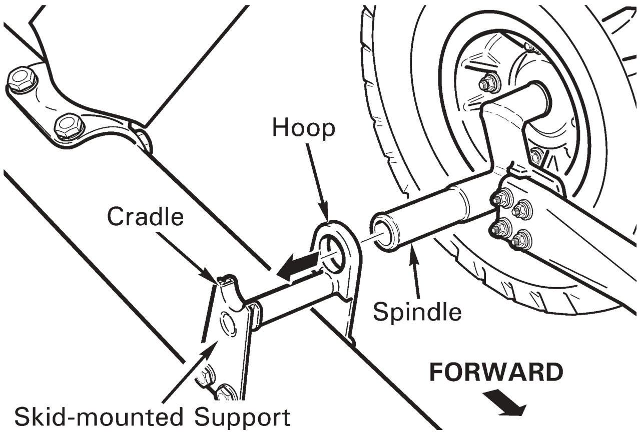

2. Verify flange is outboard of cradle.

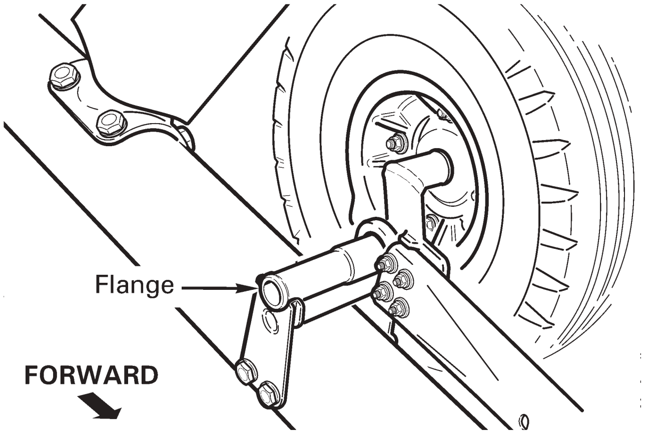

3. Pull handle in rearward arc to raise helicopter.

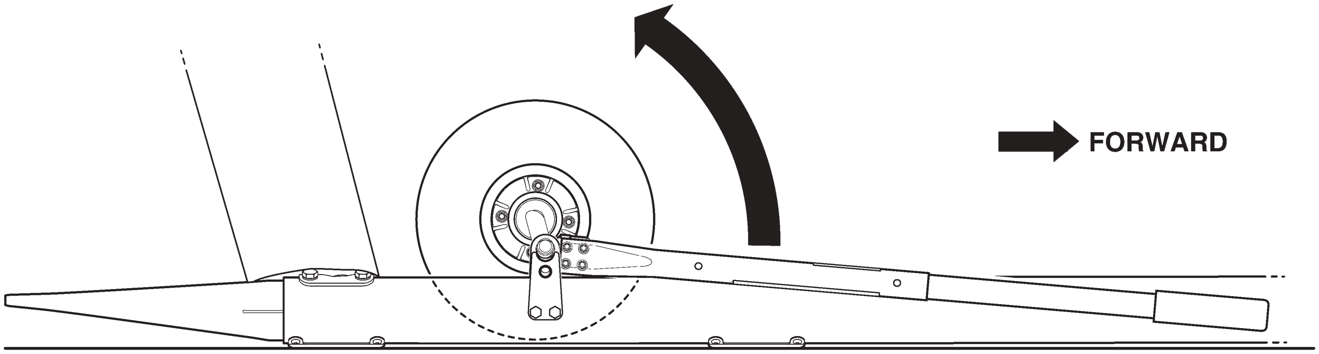

4. Handle is in locked position when parallel with the skid.

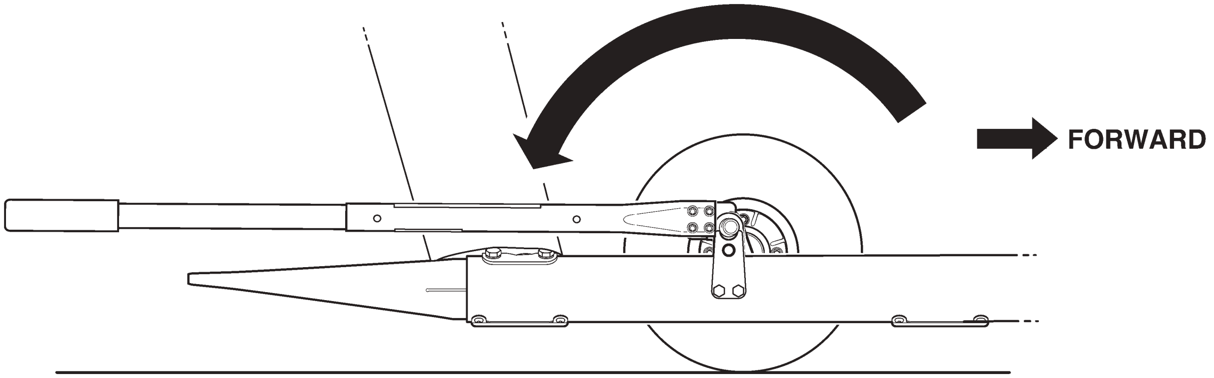

NOTE

R66 ground handling wheels are installed inboard of landing gear skid tubes. C063-5 (LH) and C063-6 (RH) ground handling wheel assemblies are not interchangeable. When wheels are installed and in locked position, both handles point aft.

FIGURE 9-1 GROUND HANDLING WHEELS

9-11 Ground Handling Wheels (continued)

B. Removal

1. Refer to Figure 9-1. Pull ground handling wheel handle in forward arc (lowers helicopter) until handle is in unlocked position, parallel with the skid. Remove spindle from skid-mounted support and remove wheel assembly. Repeat step to remove second wheel assembly.

2. Retract handle by depressing locking pins and sliding handle in until pins engage inner holes. Verify security.

9-12 Moving Helicopter on Ground Handling Wheels

1. Position main rotor blades approximately fore and aft and apply rotor brake.

2. Install ground handling wheels per Section 9-11.

3. Verify ground handling area is free of foreign object debris.

4. Have one person pull down on tail rotor gearbox until skid tubes are parallel with the ground. During ground handling, balance helicopter to minimize wear on forward skid shoes and rear extensions.

NOTE

Steer helicopter by gripping the tail rotor gearbox, aft tailcone section, or inboard part of horizontal stabilizer between tailcone and vertical stabilizers.

CAUTION

Do not steer helicopter by gripping the tail rotor guard, vertical stabilizers, outboard part of horizontal stabilizer, tail rotor, tail rotor controls, or tail skid.

5. a. If moving helicopter forward, nose first: Open engine cowling door(s). Have one person (or two people) push on the engine door frame(s) forward ledge.

   b. If moving helicopter backward, tail first: Have one person (or two people) push on either side of nose vent.

9-13 Ground Handling Carts

The R66 can be handled by one person using the MT950-1 Universal ground handling cart.

Product specifications, as well as MT950 Operating Instructions, Maintenance Manuals, and Illustrated Parts Catalogs are available on our website, www.robinsonheli.com, under the Customer Support tab.

9-14 Ground Power Start

See R66 Pilot's Operating Handbook (POH) Section 4.

9-20 Trailering

CAUTION

Trailering the R66 is not normally recommended. Most trailers large enough to accommodate the helicopter are designed for much heavier loads; the trailer's springs and shock absorbers will not function properly when lightly-loaded. Also, without support, the tailcone can resonate with trailer vibrations, subjecting the tailcone to greatly amplified loads.

If trailering is unavoidable, observe the following precautions:

1. Load trailer with ballast to an average weight the trailer is designed to carry.
2. Support the tailcone. Cushion support point(s) to prevent tailcone damage.
3. Perform one of the following options:
   a. Remove main rotor blades per Section 62-10. Pack blades in shipping crate. See R66 Illustrated Parts Catalog [IPC] Figure 99-11.
   b. Install main rotor blade supports per Section 10-13.
   c. Fabricate blade supports to unload droop stops. Position supports inboard of blade extended tab. Cushion support points to prevent blade damage.
4. Restrain tail rotor to prevent teetering.
5. Fuel helicopter per Section 12-41.
6. Protect windshield, windows, rotor systems, and all fragile equipment from exposure to highway debris and subsequent damage.
7. After trailering, perform 100-hour maintenance and inspection per Section 5-45.

CHAPTER 10

PARKING AND STORAGE

Section	*Title*	*Page*
10-10	Parking	10.1
	10-11 Parking in High Wind or Turbulent Air	10.1
	10-12 Main Rotor Blade Tie-Downs	10.3
	10-13 Main Rotor Blade Supports	10.5
10-20	Storage (Greater than 30 days)	10.6

Intentionally Blank

CHAPTER 10

PARKING AND STORAGE

10-10 Parking

1. Place cyclic stick in vertical position and apply cyclic friction.
2. Place collective stick full down and apply collective friction.

> **CAUTION**
>
> If using rotor blade tie-downs, do not overtighten tie-down straps (5 lb max tension). Do not pull down on blades to teeter rotor. To lower blade, push up on opposite blade.

3. Open three left-side fuselage access doors, observe placards, and climb steps to access main rotor. Teeter blades by pushing up on one blade until opposite blade contacts teeter stop. Rotate low blade forward. Position rotor blades approximately fore and aft and apply rotor brake.
4. Install main rotor blade tie-downs per § 10-12. Install engine exhaust cover.
5. Close and latch all access doors. Close and latch baggage compartment door.
6. Verify BATTERY switch is OFF, buckle seat harnesses, and close & latch cabin doors (if installed).

10-11 Parking in High Wind or Turbulent Air

A. High Wind or Turbulent Air

Helicopter should be hangared or moved to a safe area during storm conditions or when storm conditions are forecasted. When parking helicopter in high winds, or when aircraft is exposed to prop/rotor wash or jet blast:

1. Position helicopter with nose pointed in direction of prevailing wind or turbulent air.
2. Park helicopter per § 10-10. Position rotor blades slightly offset from fore and aft to prevent aft blade from flapping into tailcone, and apply rotor brake.

B. Extreme Conditions

In extreme conditions, at the operator's discretion:

1. Remove main rotor blades per § 62-10. Remove tail rotor assembly per § 64-10. Store main rotor blades and tail rotor assembly in hangar or safe area.
2. Mark each pitch link & associated swashplate ear with unique identifiers, remove hardware securing pitch links to swashplate and remove pitch links (preferred). Alternately, temporarily secure main rotor pitch links together using ty-raps or safety wire.
3. Remove hardware securing tail rotor pitch links to pitch control assembly & remove pitch links.

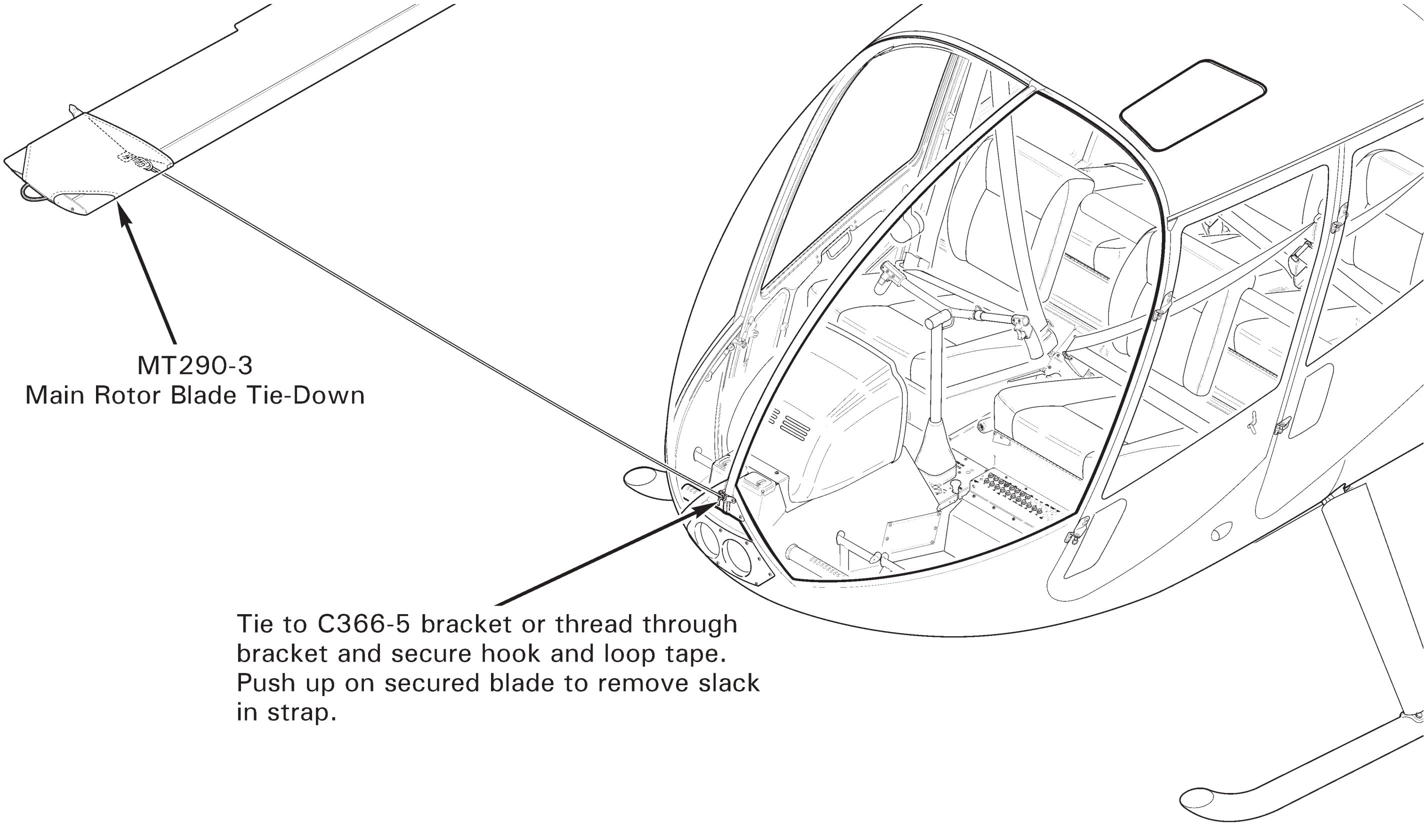

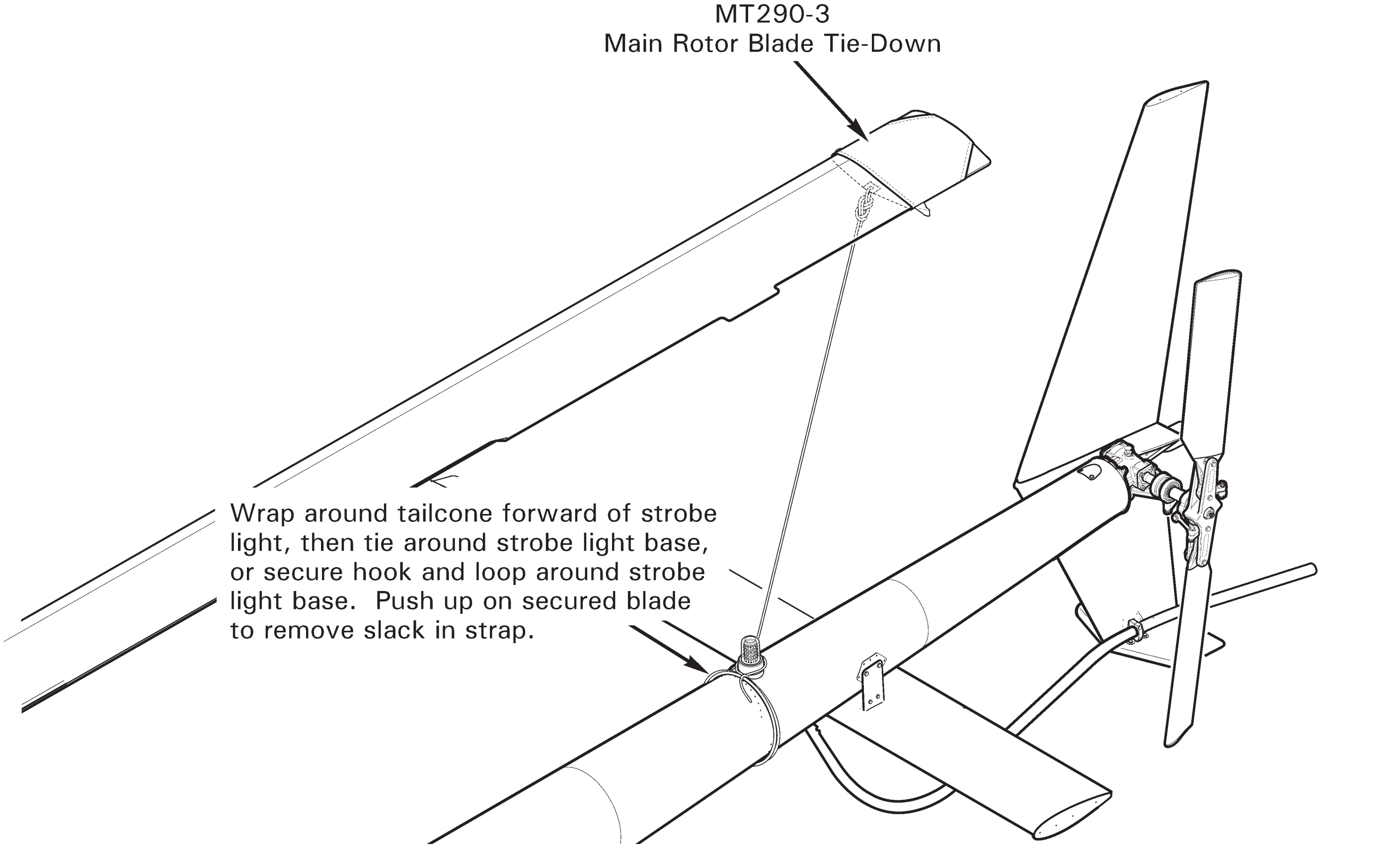

FIGURE 10-1 MAIN ROTOR BLADE TIE-DOWNS

10-12 Main Rotor Blade Tie-Downs

CAUTION

If using rotor blade tie-downs, do not overtighten tie-down straps (5 lb max tension). Do not pull down on blades to teeter rotor. To lower blade, push up on opposite blade.

1. Park helicopter and position blades per §§ 10-10 or 10-11.
2. Refer to Figure 10-1. Slide MT290-3 tie-down jacket over forward (lowered) main rotor blade tip, with white lettering facing down. Tie strap to C366-5 bracket or thread strap through bracket and secure tie-down hook and loop tape. Push up on secured blade to remove slack in tie-down strap.
3. As required, install MT290-3 tie-down on aft main rotor blade. Slide jacket over blade tip, with white lettering facing down. Wrap strap around tailcone forward of strobe light, then tie around strobe light base or secure hook and loop tape around strobe light base. Push up on secured blade to remove slack in tie-down strap.

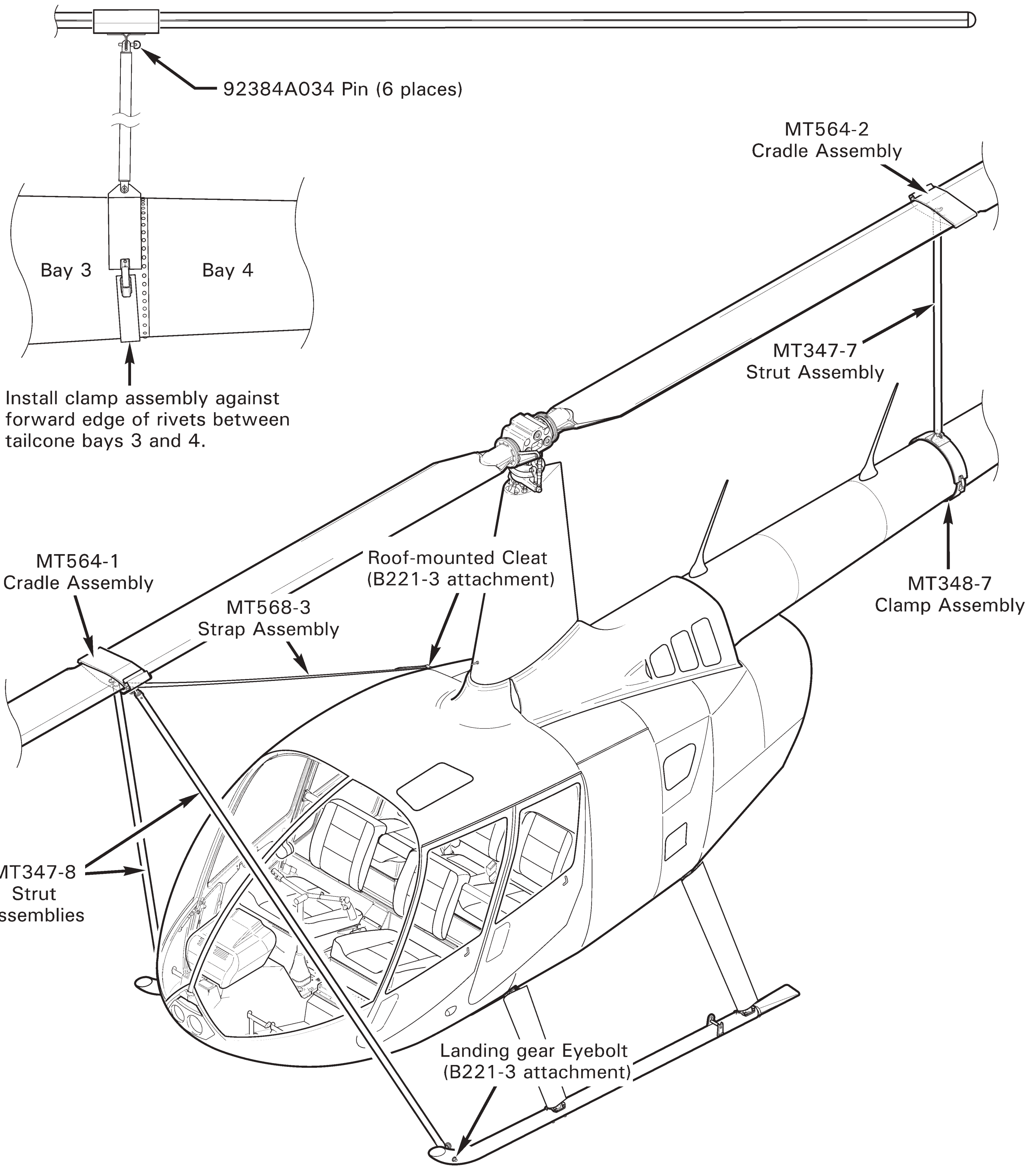

FIGURE 10-2 MAIN ROTOR BLADE SUPPORTS

10-13 Main Rotor Blade Supports

Refer to R66 Illustrated Parts Catalog (IPC) Figure 10-7.

> **CAUTION**
>
> Do not allow strut assemblies to hang from cradle assemblies installed on main rotor blades. Support strut assemblies during strut removal or installation.

A. Removal

1. Refer to Figure 10-2. Remove 92384A034 retaining pins securing MT347-7 strut assembly to MT564-2 cradle assembly and MT348-7 clamp assembly; remove strut assembly. Remove cradle and clamp assemblies.

2. Remove retaining pin securing one MT347-8 strut assembly to landing gear eyebolt, then remove pin securing same strut to MT564-1 cradle assembly. Repeat step to remove second strut assembly.

3. Detach MT568-3 strap assembly hook and loop tape near roof-mounted cleat and unthread strap from cleat. Remove cradle assembly.

B. Installation

> NOTE
>
> B221-3 attachment installation (landing gear eyebolts and roof-mounted cleat) is required for mounting blade supports.

1. Refer to Figure 10-2. Position main rotor blades approximately fore and aft.

2. Install MT564-1 cradle assembly inboard of forward blade extended tab, with MT568-3 strap assembly attached. Thread opposite end of strap assembly through roof-mounted cleat and secure strap hook and loop tape.

3. Secure one MT347-8 strut assembly to cradle assembly, then to landing gear eyebolt, using 92384A034 retaining pins. Repeat step to secure second strut assembly.

4. Install MT564-2 cradle assembly inboard of aft blade extended tab. Install MT348-7 clamp assembly against forward edge of rivets between tailcone bays 3 and 4.

5. Secure MT347-7 strut assembly to cradle and clamp assemblies using retaining pins. Verify strut is approximately vertical.

6. Engage rotor brake. If desired, mark cradle assembly location on blade using felt-tip marker, to facilitate future installation.

10-20 Storage (Greater than 30 days)

> NOTE
>
> Helicopter should be hangared or moved to a safe area during storage.

> NOTE
>
> Periodically inspect aircraft for corrosion and correct as required. Aircraft stored in humid environments are subject to aggressive corrosive reaction and require more frequent inspection.

1. Record the date helicopter is prepared and placed in storage.
2. Preserve engine for aircraft storage per RR300 Series Operation and Maintenance Manual (OMM).
3. Refinish main rotor blades per Section 62-52. Refinish tail rotor blades per Section 64-36.
4. Open applicable circuit breakers.
5. Remove battery per Chapter 96. Inspect & service battery according to battery manufacturer's instructions.
6. Service engine oil, hydraulic fluid, and main & tail rotor gearboxes per Chapter 12.
7. Fuel helicopter per Section 12-41.

> NOTE
>
> Fuel lubricates bladder inner liner and keeps it from drying out or cracking. Refuel helicopter after run-ups during storage per Section 12-41.

8. Clean aircraft per Section 20-10. Ensure helicopter is clean and dry prior to storing. Open door vents and doors to ventilate cabin and baggage compartment as required.
9. Close and latch all access doors. Install engine exhaust cover.

CHAPTER 11

PLACARDS AND MARKINGS

Section	*Title*	*Page*
11-10	Placards and Markings	11.1

Intentionally Blank

CHAPTER 11

PLACARDS AND MARKINGS

11-10 Placards and Markings

Refer to R66 Illustrated Parts Catalog Chapter 11 for placard and marking locations.

A. Removal

To remove previously installed decals, start at corners and slowly peel off decal by hand or using a plastic wedge. Avoid damaging or removing paint or primer from surfaces. Remove decal entirely.

B. Installation

Verify surfaces are clean and dry before attaching decals. Use a clean cloth wet with acetone or mild soapy water (pH between 7 & 9) to clean surfaces, but use caution when using acetone near silk-screened lettering. Acetone can smudge or remove silk-screened letters. Attach decal and rub decal surface with finger, applying slight pressure.

Intentionally Blank

CHAPTER 12

SERVICING

Section *Title* *Page*

12-10 Main Rotor Gearbox 12.1
12-11 Servicing 12.1
12-12 Filter Replacement 12.3
12-13 Chip Detector and Sight Gage 12.3
12-20 Tail Rotor Gearbox 12.7
12-21 Servicing 12.7
12-22 Chip Detector and Sight Gage 12.8
12-23 Drain and Flush 12.8
12-30 Hydraulic System 12.9
12-31 Servicing 12.9
12-32 Filter Replacement 12.9
12-33 Drain and Flush 12.11
12-34 Bleeding 12.12
12-40 Fuel System 12.13
12-41 Fueling 12.13
12-42 Defueling 12.13A
12-50 Main Rotor Blades 12.15
12-51 Pitch Bearing Housing 12.15
12-60 Engine Oil Servicing 12.16
12-70 (Engine) Compressor Rinse and Wash 12.17
12-71 Drainage Spotface Inspection During Cleaning or Rinsing of RR300 Engine 12.17A
12-80 Air Conditioning System 12.18
12-81 Refrigerant Recovery and System Charging 12.18
12-82 Desiccant Replacement 12.19
12-83 Leak Detection 12.19
12-90 Lubrication of Swashplate Bearings 12.21

Intentionally Blank

CHAPTER 12

SERVICING

12-10 Main Rotor Gearbox

WARNING

Refer to appropriate Material Safety Data Sheet (MSDS) and take necessary safety precautions when working in proximity to hazardous materials.

12-11 Servicing

NOTE

Inspect main rotor gearbox and gearbox lubrication system for leaks when "top off" is required.

NOTE

Verify aircraft is on level ground when evaluating gearbox oil level.

A. Draining Fluid

1. Refer to Figure 12-1. Disconnect chip detector wiring, as required. Remove chip detector from housing.
2. Refer to Figure 12-2. Insert MT054-1 drain assembly into chip detector housing. Position drain hose overboard into a suitable drain container. Jam wedge between support panel stiffener and drain assembly fitting to open valve.

B. Adding Fluid

1. Install chip detector per Section 12-13, if removed.
2. Refer to Figure 12-1. Remove gearbox filler-plug. Fill gearbox with A257-22 lubricant to center of sight glass.
3. Rotate rotor system by hand for several revolutions and pull down on tail rotor gearbox several times. Check gearbox oil level and adjust level as required.
4. Install filler-plug and special torque plug per Section 20-33.
5. Run-up helicopter approximately five minutes at 60-70% RPM per R66 Pilot's Operating Handbook (POH) Section 4.
6. Check gearbox oil level, and adjust level per steps 2 thru 6 as required.

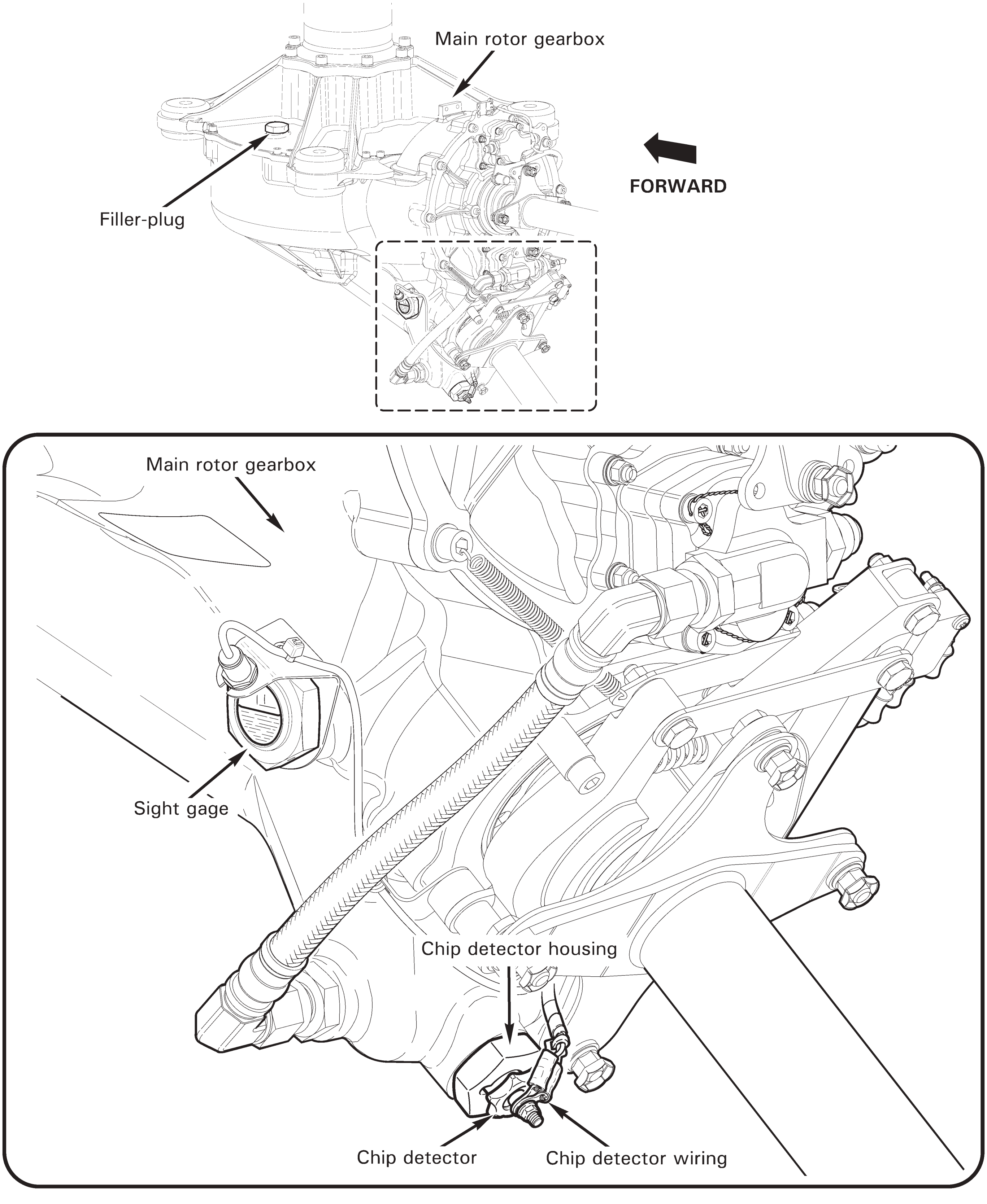

FIGURE 12-1 MAIN ROTOR GEARBOX SERVICING

12-12 Filter Replacement

> NOTE
>
> Replace main rotor gearbox oil every 600 hours. When replacing a filter after new or overhauled main rotor gearbox has accumulated 100 hours, replacing oil is not required.

1. Drain main rotor gearbox oil per § 12-11, if required.
2. Cut and discard safety wire securing bowl & indicator assembly to head assembly. Unscrew bowl and remove and discard element. Remove o-ring and back-up ring from head assembly.
3. Clean and dry bowl assembly; install new F651-3 seals kit and F651-2 element.
4. Hand-tighten bowl assembly until tight against head assembly. Install 0.032-inch diameter lockwire and safety bowl to head.
5. Service main rotor gearbox per § 12-11.

12-13 Chip Detector and Sight Gage

A. Removal

1. Refer to Figure 12-1. Disconnect chip detector wiring, as required. Remove chip detector from housing.

> NOTE
>
> Remove chip detector housing and inspect for obvious damage if housing leaks.

2. Drain main rotor gearbox oil per § 12-11, if removing chip detector housing or sight gage. Remove housing and/or gage as required.

B. Cleaning Chip Detector (and Housing)

1. Clean chip detector using a toothbrush and approved solvent (refer to § 20-70). Remove debris using compressed air or masking tape; do not use a magnet. Dry chip detector using compressed air or a lint-free cloth. Inspect condition.
2. Refer to Figure 12-1. Connect chip detector electrical wiring and special torque terminal nut per § 20-33. Turn battery switch on and ground detector's central magnetic probe to airframe. Verify appropriate CHIP warning segment illuminates. Turn battery switch off.

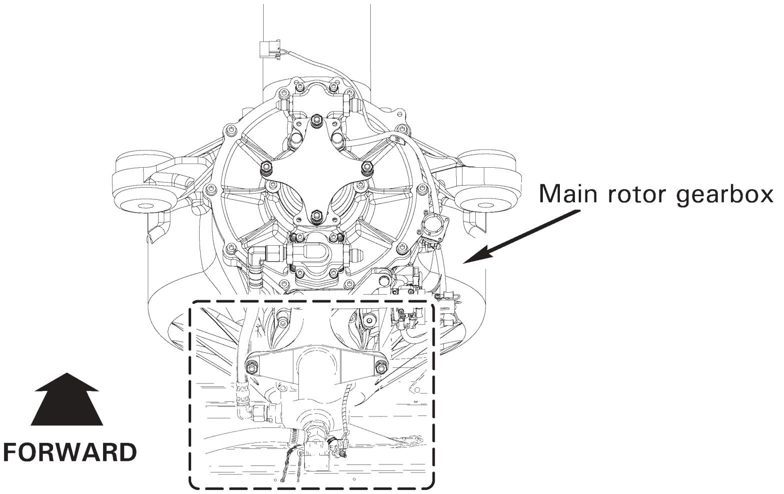

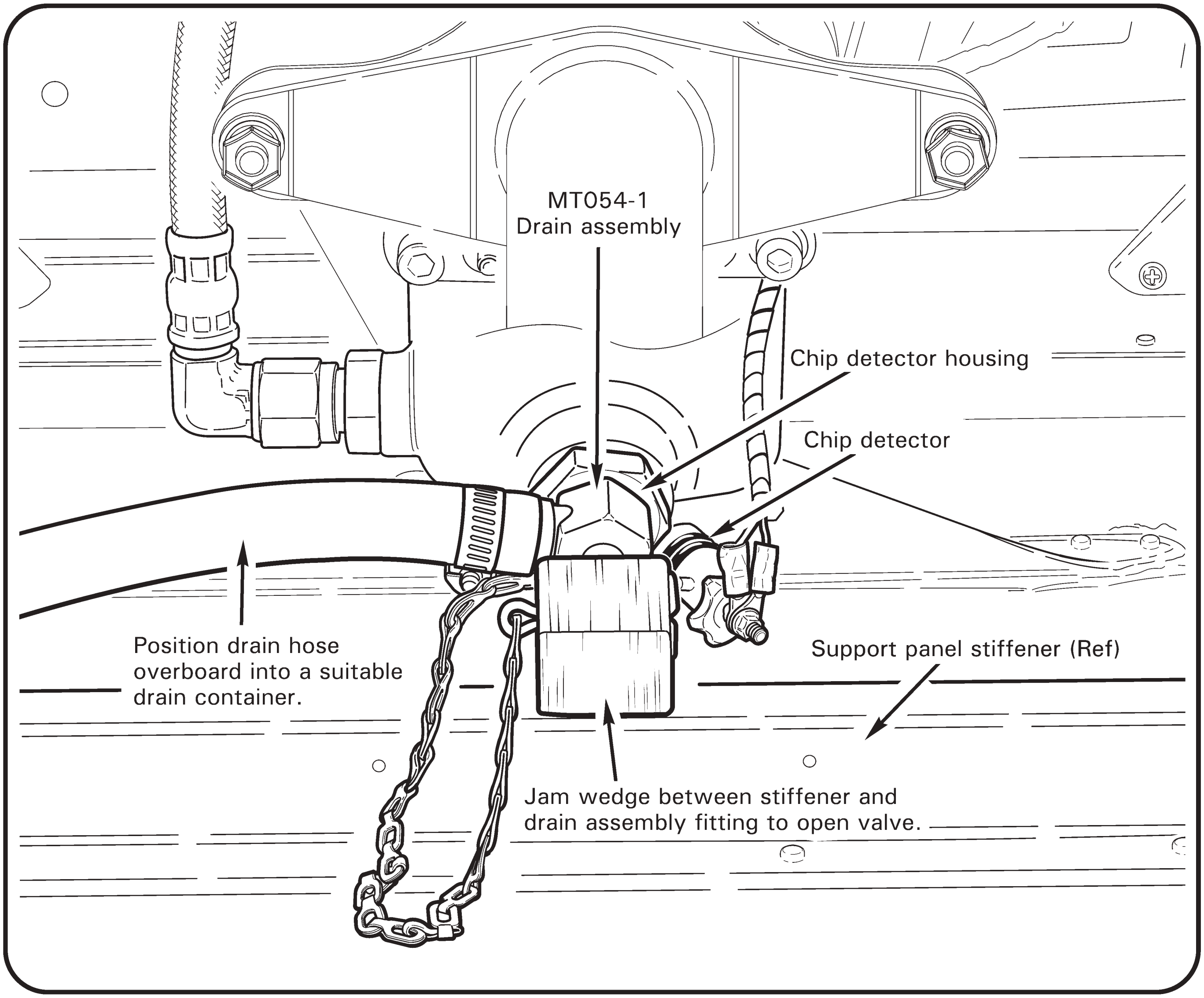

FIGURE 12-2 DRAINING MAIN ROTOR GEARBOX OIL

12-13 Chip Detector and Sight Gage (continued)

C. Installation

1. Refer to Figure 12-1. Verify cleanliness and clarity of sight gage. As required, remove sight gage per Part A and clean with approved solvent per Section 20-70. Install sight gage and special torque per Section 20-33.

2. Verify cleanliness of chip detector and housing. As required, remove and clean chip detector and housing per Parts A and B. Install housing and special torque per Section 20-33. Install chip detector.

3. Turn BATTERY switch ON. Verify MR CHIP warning segment illuminates when test button is depressed. Turn BATTERY switch OFF.

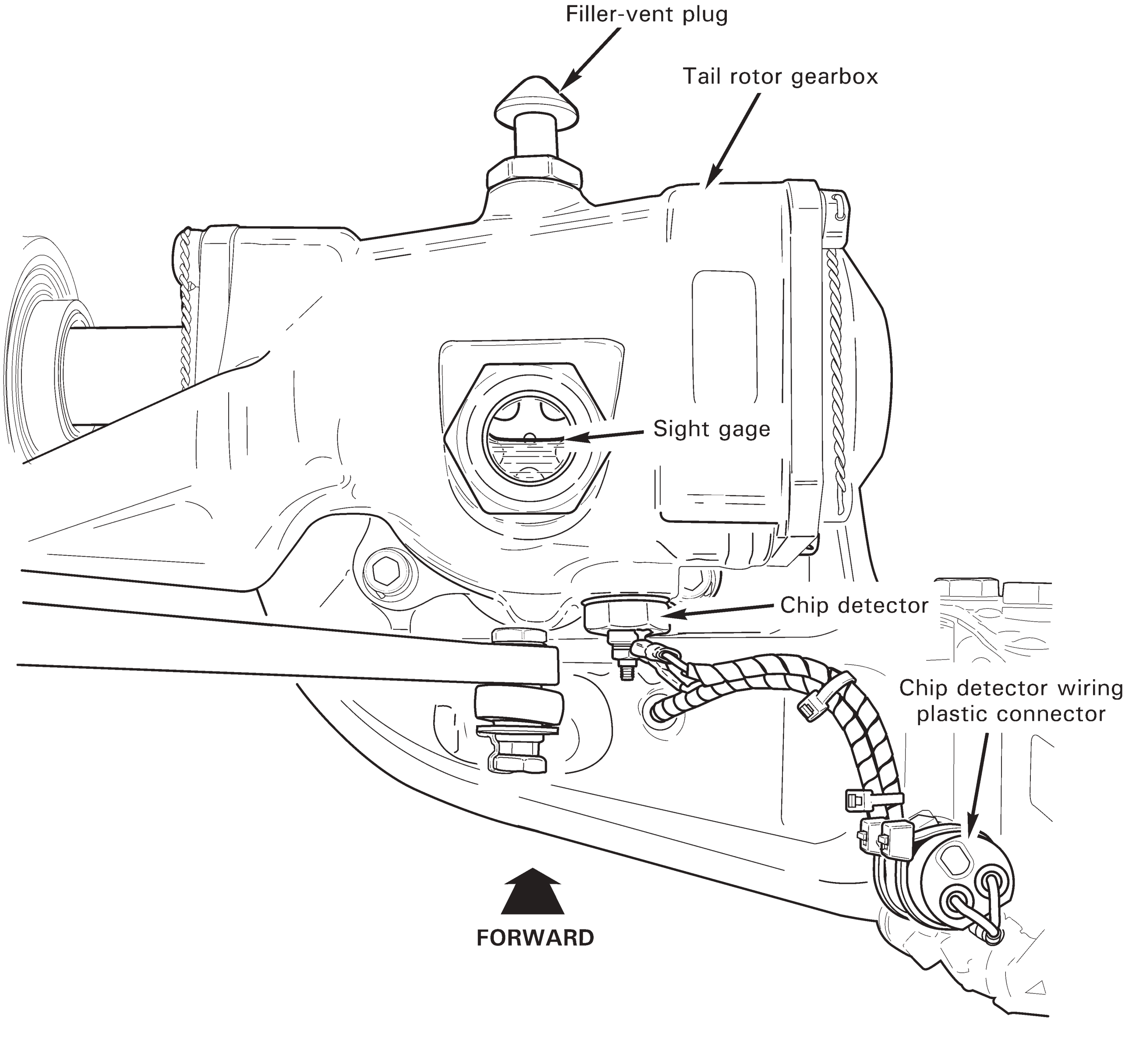

FIGURE 12-3 TAIL ROTOR GEARBOX

12-20 Tail Rotor Gearbox

> **WARNING**
>
> **Refer to appropriate Material Safety Data Sheet (MSDS) and take necessary safety precautions when working in proximity to hazardous materials.**

12-21 Servicing

> NOTE
>
> Inspect tail rotor gearbox for leaks when “top off” is required.

> NOTE
>
> Verify aircraft is on level ground when evaluating gearbox oil level.

A. Draining Fluid

1. Refer to Figure 12-3. Cut and discard ty-raps as required and disconnect chip detector wiring from airframe harness at connectors.
2. Place a suitable drain container under gearbox to catch oil, then remove chip detector.

B. Adding Fluid

1. Install chip detector per Section 12-22.
2. Refer to Figure 12-3. Remove filler-vent plug and fill gearbox with A257-22 lubricant to center of sight glass.
3. Install plug and special torque per Section 20-33.

12-22 Chip Detector and Sight Gage

A. Removal

1. Drain tail rotor gearbox oil per Section 12-21.
2. Remove sight gage, as required.

B. Cleaning Chip Detector

1. Clean chip detector per Section 12-13 Part B (main rotor gearbox).

C. Installation

1. Refer to Figure 12-3. Verify cleanliness and clarity of sight gage. As required, remove sight gage per Part A and clean with approved solvent per Section 20-70. Install sight gage and special torque per Section 20-33.
2. Verify cleanliness of chip detector. As required, clean chip detector per Section 12-13 Part B (main rotor gearbox). Install chip detector and special torque per Section 20-33.
3. Connect chip detector wiring and install ty-raps, as required. Cinch ty-raps until snug without over-tightening, and trim tips flush with heads.
4. Turn BATTERY switch ON. Verify TR CHIP warning segment illuminates when test button is depressed. Turn BATTERY switch OFF.
5. Service tail rotor gearbox per Section 12-21.

12-23 Drain and Flush

1. Drain tail rotor gearbox oil per Section 12-21.
2. Install chip detector and special torque per Section 20-33.
3. Remove filler-vent plug and add approximately five ounces of SAE30, SAE40, SAE50, or SAE20W50 straight mineral engine oil to gearbox. Install plug and special torque per Section 20-33.
4. Run-up helicopter approximately five minutes at 60-70% RPM per R66 Pilot's Operating Handbook (POH) Section 4.
5. Drain tail rotor gearbox oil (mineral oil) per Section 12-21.
6. Clean and install chip detector per Section 12-22 Parts B and C.

12-30 Hydraulic System

CAUTION

Do not contaminate hydraulic fluid. Service hydraulic system with clean fluid from sealed containers, using clean tools.

WARNING

Review appropriate Safety Data Sheet (SDS) when working in proximity to hazardous materials. Specific recommendations for use of personal protective equipment are located in the SDS.

12-31 Servicing

A. Draining Fluid

1. Perform drain and flush per § 12-33.

B. Adding Fluid

NOTE

Inspect hydraulic system for leaks when “top off” is required.

1. Refer to Figure 12-4. Remove filler-vent plug. With system filled and bled, fill hydraulic reservoir to center of sight glass with new A257-15 fluid.
2. Install filler-vent plug and special torque per § 20-33.

12-32 Filter Replacement

1. Refer to Figure 12-4. Remove D516-1 cap and filter and visually inspect element for contaminants. If element is clear, proceed to step 2. If metal contamination is found, use a magnet to determine if metal is ferrous. If metal is ferrous, perform the following:
   a. Install new filter per steps 2 thru 4.
   b. After one flight-hour, remove filter and inspect for ferrous metal. If ferrous metal is found upon second inspection, replace hydraulic pump per § 67-50, then drain and flush hydraulic system per § 12-33.
2. Discard cap packing. Clean cap with approved solvent per § 20-70, and dry cap with compressed air or a lint-free cloth. Lubricate new packing with A257-15 fluid and install on cap.
3. Lubricate packing inside new filter with A257-15 fluid and install filter in reservoir. Install cap and special torque per § 20-33.
4. Service hydraulic reservoir per § 12-31.

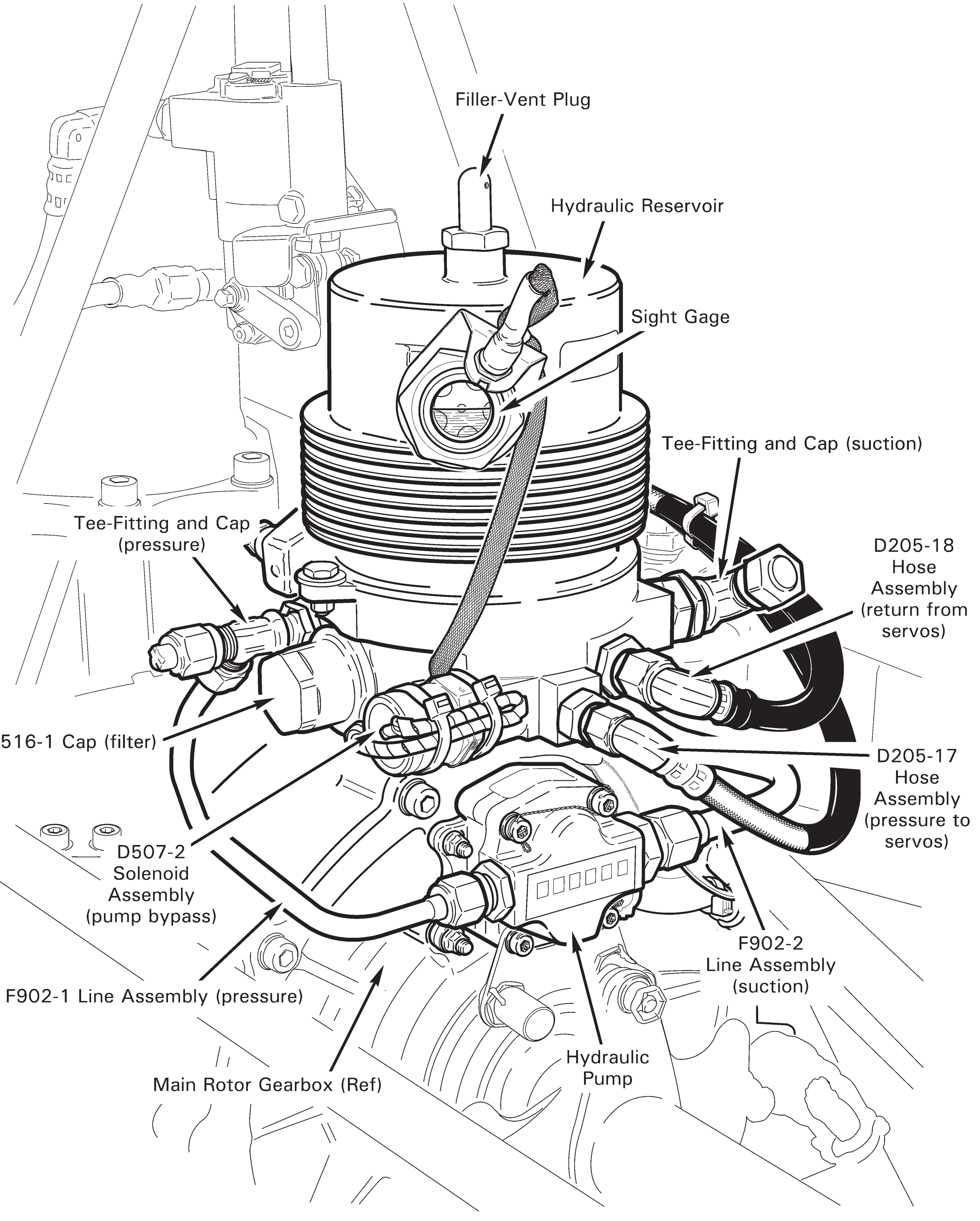

FIGURE 12-4 HYDRAULIC SYSTEM

12-33 Drain and Flush

NOTE
Drain and flush hydraulic system if oil turns dark or emits bad odor.

WARNING
Keep limbs clear of flight controls when operating test pump. Hydraulic forces can cause injury.

1. Refer to Figure 12-4. Remove filler-vent plug. Place a suitable drain container under F902-1 (pressure) and F902-2 (suction) line assembly T-fittings, and remove caps. Pour small amount of new A257-15 fluid into hydraulic reservoir to purge suction line. Pressure line will drain in following step, when D516-1 cap is removed.
2. Replace filter per Section 12-32.
3. Connect MT384 (or equivalent) 0.8-1.2 gpm hydraulic test pump assembly to T-fittings. (Pressure and suction fittings are different sizes to ensure correct connection.)
4. Service hydraulic reservoir per Section 12-31.
5. Disconnect D205-18 hose assembly (return) from reservoir. Place line into drain container; cap union with a T-fitting cap.
6. Activate test pump and inspect hydraulic system for leaks.
7. Simultaneously fully raise collective and move cyclic fully forward then simultaneously fully lower collective and move cyclic fully aft. Monitor reservoir fluid level and fill as required. Repeat procedure until return line fluid is clean.
8. Simultaneously fully raise collective and move cyclic fully aft then simultaneously fully lower collective and move cyclic fully forward. Monitor reservoir fluid level and fill as required. Repeat procedure until return line fluid is clean.
9. Turn off test pump and disconnect equipment. Remove cap and connect hose assembly (return) to reservoir. Using back-up wrench, standard torque hose nut per Section 20-32 and torque stripe per Figure 5-1. Install caps on T-fittings, special torque caps per Section 20-33, and torque stripe per Figure 5-1.
10. Bleed hydraulic system per Section 12-34.
11. Remove cap and filter and visually inspect element for contaminants. If debris is found, repeat drain and flush procedure. If filter is clean, install filter & cap and special torque cap per Section 20-33.
12. Service hydraulic reservoir per Section 12-31.

12-34 Bleeding

WARNING

Keep limbs clear of flight controls when operating test pump. Hydraulic forces can cause injury.

1. Remove F902-1 (pressure) line assembly T-fitting cap. Connect MT384 (or equivalent) 0.8-1.2 gpm hydraulic test pump pressure line to T-fitting. (Pressure and suction fittings are different sizes to ensure correct connection.)

2. Remove filler-vent plug and cover hydraulic reservoir hole with finger to prevent fluid loss (until suction line is connected). Remove F902-2 (suction) line assembly T-fitting cap. Connect test pump suction line to T-fitting. Service reservoir with new A257-15 fluid, as required.

3. Activate test pump and inspect hydraulic system for leaks.

4. Simultaneously fully raise collective and move cyclic fully forward then simultaneously fully lower collective and move cyclic fully aft. Repeat procedure ten times.

5. Simultaneously fully raise collective and move cyclic fully aft then simultaneously fully lower collective and move cyclic fully forward. Repeat procedure ten times.

6. Turn off test pump and verify no leaks in hydraulic system.

7. Cover reservoir hole with finger (until suction line T-fitting is capped). Disconnect test pump suction line from suction line T-fitting and install cap.

8. Disconnect test pump pressure line from pressure line T-fitting and install cap. Special torque caps per Section 20-33 and torque stripe per Figure 5-1.

9. Service hydraulic reservoir per Section 12-31.

12-40 Fuel System

> **WARNING**
>
> **Review appropriate Safety Data Sheet (SDS) when working in proximity to hazardous materials. Specific recommendations for use of personal protective equipment are located in the SDS.**

> **WARNING**
>
> **Always fuel helicopter in a well-ventilated area. No smoking within 100 feet of aircraft during fueling.**

12-41 Fueling

> NOTE
>
> If helicopter is equipped with pressure fueling system, refer to R66 Pilot's Operating Handbook Section 9 Pressure Fueling Supplement for pressure refueling procedure.

1. Turn battery switch off.
2. a. **Main Fuel System:** Ground helicopter and ground fuel vehicle. Open fueling cowl door and connect fuel vehicle ground cable to helicopter at location identified by decal.

   b. **Auxiliary Fuel System:** Ground helicopter and ground fuel vehicle. Open baggage compartment door and connect fuel vehicle ground cable to aux fuel tank at location identified by decal.
3. Verify proper grade of aviation fuel. See R66 Pilot's Operating Handbook (POH) Section 2 for approved fuel grades and instructions for use of anti-ice additive.
4. Remove fuel cap and fuel helicopter as required.

> NOTE
>
> If auxiliary fuel system is installed, press QUANTITY button on aux fuel control panel for aux tank quantity, displayed on fuel quantity gage.

5. a. **Main Fuel System:** Install fuel cap, remove grounding equipment, and close and secure cowl door.

   b. **Auxiliary Fuel System:** Install fuel cap, remove grounding equipment, and close and secure baggage compartment door.

12-42 Defueling

A. Main Fuel System

1. Remove engine cowling per § 53-21.
2. Turn battery switch off. Pull fuel valve control to Off position.
3. Disconnect B283-12 hose at engine and install cap on engine inlet fitting.
4. Position hose into a suitable, grounded drain container.

> NOTE
>
> If desired, perform low-fuel switch assembly check per § 28-22.

5. Push fuel valve control into On position and drain fuel; drain residual fuel via sump valve. Pull fuel valve control to Off position. Perform maintenance tasks as required.
6. Add minimum 5 gallons fuel per § 12-41. Push fuel valve control into On position until fuel flows thru hose without bubbles. Pull fuel valve control to Off position.
7. Remove cap from engine fuel inlet fitting. Connect B283-12 hose, special torque hose nut per § 20-33, and torque stripe per Figure 5-1.
8. Defuel engine as required per RR300 Series Operation and Maintenance Manual (OMM).

B. Auxiliary Fuel System

1. Turn battery switch off. Open baggage compartment door.
2. Release D205-35 (large tank; drain) or D205-37 (small tank; drain) hose assembly from tab. Position hose overboard into a suitable, grounded drain container.
3. Open locking drain valve and drain fuel as required.
4. Close drain valve and secure hose near drain valve at tab. Secure baggage compartment door.

> NOTE
>
> Alternately, and depending on projected operations and main fuel system quantity, fuel may be transferred from the auxiliary fuel tank to the main bladder using the auxiliary fuel pump (use of external power is recommended). After fuel transfer using pump method there will be some fuel remaining in auxiliary tank; to completely drain tank, use drain hose method described above.

Intentionally Blank

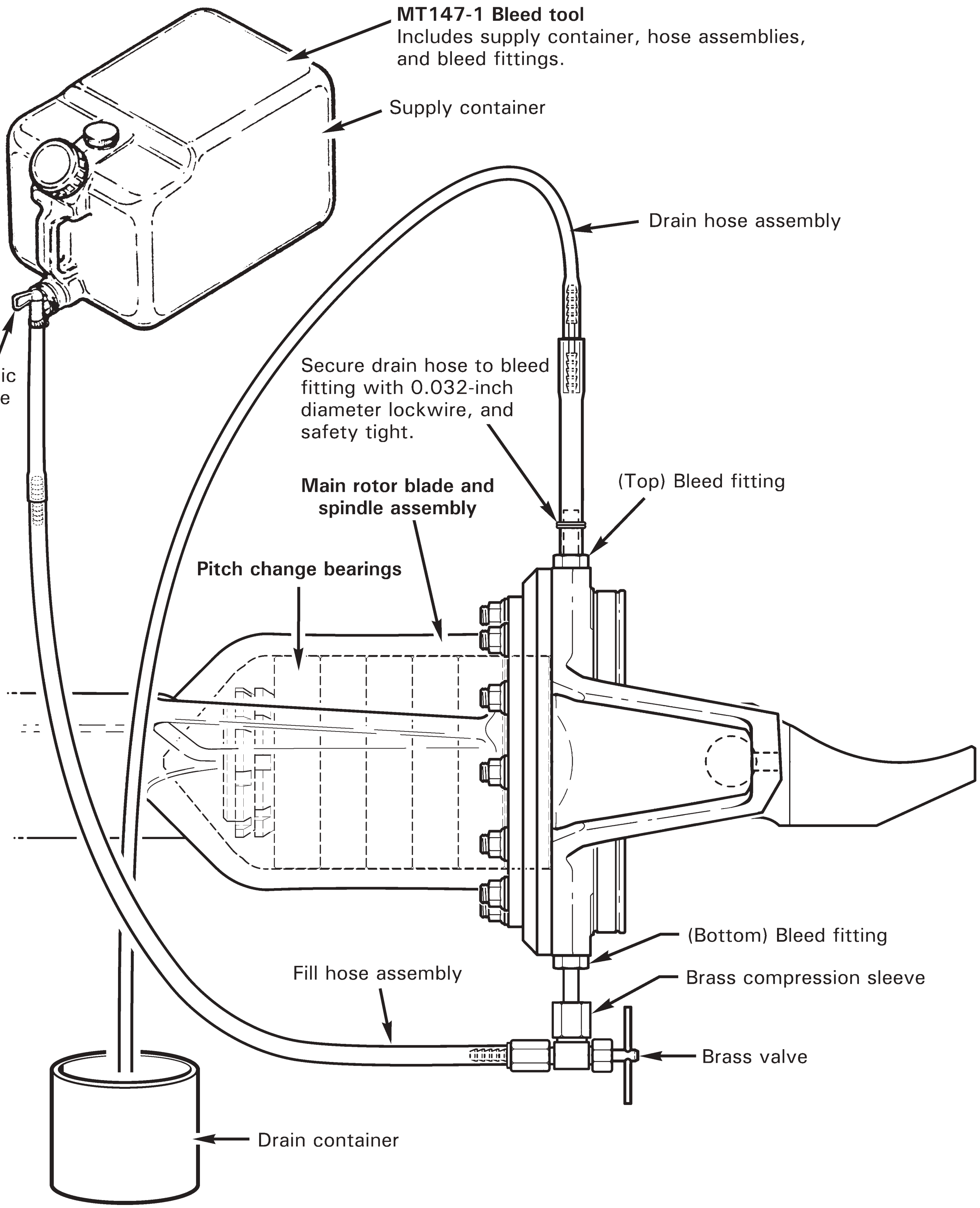

FIGURE 12-5 MAIN ROTOR BLADE PITCH BEARING HOUSING

12-50 Main Rotor Blades

WARNING

Refer to appropriate Material Safety Data Sheet (MSDS) and take necessary safety precautions when working in proximity to hazardous materials.

12-51 Pitch Bearing Housing

NOTE

MT147-1 Main rotor blade spindle air bleed tool includes supply container, hose assemblies, and bleed fittings.

A. Servicing

1. Remove main rotor blades per § 62-10.
2. Refer to Figure 12-5. Place a suitable drain container below main rotor blade spindle assembly. Remove two B289-2 bolts and drain fluid.
3. Install MT147-1 bleed tool fittings into ports. Attach drain hose assembly to (top) bleed fitting, secure with two wraps 0.032-inch diameter lockwire, and safety tight. Position drain hose into drain container.
4. Place supply container with sufficient A257-4 fluid approximately 3 feet above spindle. Route fill hose assembly into drain container and open brass valve. Open supply container plastic valve and purge air from hose. Close valves.
5. Connect brass valve to (bottom) bleed fitting by tightening brass compression sleeve.
6. Open valves and fill spindle housing until no air bubbles are visible in drain hose assembly. Massage spindle boot, “pitch” blade up & down, and raise blade tip up & down to remove trapped air.
7. Remove drain hose assembly and (top) bleed fitting, and install B289-2 bolt. Roll the blade over. After five minutes, inspect the boot for leaks. If no leaks are found, close valves, remove fill hose assembly brass valve and (bottom) bleed fitting, and install other bolt.
8. Torque B289-2 bolts per § 20-33 and torque stripe per Figure 5-1.
9. Repeat steps for opposite blade.

12-60 Engine Oil Servicing

A. Draining Fluid

1. As required, run-up helicopter two to five minutes at 60-70% RPM per R66 Pilot's Operating Handbook (POH) Section 4 to warm engine oil.
2. Remove engine cowling per § 53-21.
3. Place a suitable drain container below B289-2 bolt in bend of F723-1 line assembly, and below AS5169D04 (drain) fitting in F649-1 oil cooler assembly.
4. Remove line assembly bolt and oil cooler assembly (drain) fitting and drain oil.
5. Service the engine oil system per RR300 Series Operation and Maintenance Manual (OMM).

B. Adding Fluid

> NOTE
>
> Do not contaminate engine oil. Service engine oil system with clean fluid from sealed containers, using clean tools.

> NOTE
>
> When servicing airframe oil tank, full oil quantity is six quarts; minimum quantity for takeoff is four quarts.
>
> Six quart indication is top of knurled section of dipstick. Four quart indication is bottom of knurled section of dipstick or center of oil tank sight gage.
>
> If shut down for more than 15 minutes, some oil may drain from oil tank to engine giving a false low oil quantity indication. If oil level appears low, turn igniter switch OFF and have a qualified person motor engine with starter for 30 seconds then re-check oil quantity.

1. Install B289-2 bolt in bend of F723-1 line assembly and special torque per § 20-33.
2. Install AS5169D04 (drain) fitting in F649-1 oil cooler assembly and special torque per § 20-33.
3. Install engine cowling per § 53-21.
4. Open access door, remove dipstick, and service airframe oil tank using approved turbine engine oil per R66 Pilot's Operating Handbook (POH) Section 8.
5. Install dipstick and close access door.
6. Perform engine test per RR300 Series Operation and Maintenance Manual (OMM) as required.

12-70 (Engine) Compressor Rinse and Wash

CAUTION

See RR300 Series Operation and Maintenance Manual (OMM) requirements for compressor rinse and wash intervals.

CAUTION

Always perform compressor rinse or wash with sufficient clearance for possible rotor system rotation.

1. Remove engine cowling per § 53-21.
2. Open access door and remove (engine) compressor fluid-delivery tube cap.
3. Refer to RR300 Series Operation and Maintenance Manual (OMM) for equipment and material requirements. Operate compressor cleaning system per manufacturer's instructions.
4. Connect appropriate cleaning system hose to delivery tube.
5. Refer to RR300 Series OMM for compressor rinse and wash procedures.

   To motor engine without ignition system:

   a. Release rotor brake.
   b. Turn battery switch on.
   c. Verify fuel cutoff pulled OFF. Verify igniter (key) switched OFF.
   d. Verify area is clear.
   e. Close throttle.
   f. Push and release start button as required to maintain N1 speed for required interval.
6. Disconnect cleaning system hose from delivery tube. Install delivery tube cap and standard torque per § 20-32. Close access door.
7. Refer to RR300 Series OMM for returning engine to service.

   To perform ground run:

   a. Refer to R66 Pilot's Operating Handbook (POH) Section 4 for run-up and shutdown procedures.
8. Install engine cowling per § 53-21.

12-71 Drainage Spotface Inspection During Cleaning or Rinsing of RR300 Engine

Follow published Rolls-Royce guidance (subject to revision) to maximize RR300 engine corrosion prevention:

- RR300 Operation and Maintenance Manual (OMM) Task 05-50-00-100-801, Clean the Engine after Operation in a Corrosive Environment, and
- NTO (Notice To Operators) No. RR300-020, RR300 Engine Wash Procedures.

Refer to Figure 12-6. During cleaning or rinsing of engine, RHC recommends verifying the drainage spotface on the magnesium gearbox cover is unobstructed. Follow OMM guidance; do NOT use metallic tools or wire to remove debris.

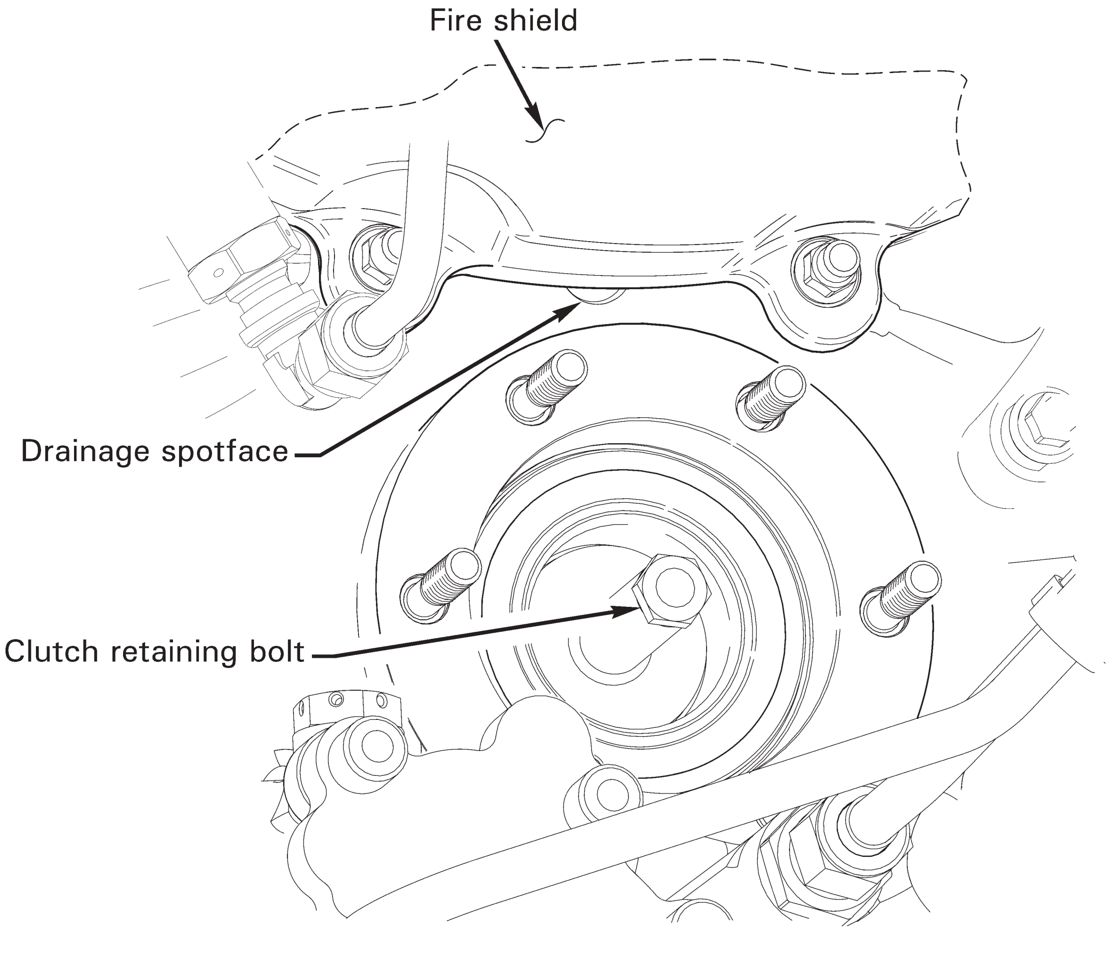

VIEW LOOKING UP & FORWARD

FIGURE 12-6 DRAINAGE SPOTFACE INSPECTION

Intentionally Blank

12-80 Air Conditioning System

12-81 Refrigerant Recovery and System Charging

> NOTE
>
> In the United States, only personnel with EPA certification under Section 609 of the Clean Air Act may charge the system with refrigerant or work on the refrigerant system once it has been charged. Different requirements may apply in countries other than the United States.

Automotive-style air conditioning service equipment, compatible with R134a refrigerant, is required to recover and charge the system with refrigerant. This equipment is available from many manufacturers in varying levels of automation and complexity. Minimum components include a vacuum pump, pressure pump, refrigerant supply, scale to measure refrigerant charge, pressure/vacuum gage, and appropriate lines and fittings.

Ensure that the technician performing the task is appropriately qualified.

A. Refrigerant Recovery

> NOTE
>
> If a leak or other service problem is encountered after system is charged with refrigerant, refrigerant must be recovered before work on system can proceed.

1. Remove tailcone cowling per § 53-23.
2. Automotive-style high- and low-side system service ports are located on G794 hose assemblies where they mount to the compressor assembly. Connect service equipment to system quick-disconnect ports and recover refrigerant per equipment manufacturer's instructions.

B. System Charging

> **CAUTION**
>
> Do not overcharge system. Perform leak detection per § 12-83 if a leak is suspected, then use correct charge.

1. Remove tailcone cowling per § 53-23.
2. Automotive-style high- and low-side system service ports are located on G794 hose assemblies where they mount to the compressor assembly. Connect service equipment to system quick-disconnect ports.
3. Replace desiccant per § 12-82. Vacuum system, then charge with R134a refrigerant per equipment manufacturer's instructions. Correct charge is 2.25 lb (36 oz) refrigerant.
4. Install tailcone cowling per § 53-23.

12-82 Desiccant Replacement

> NOTE
>
> Replace desiccant when condenser or refrigerant system is exposed to air. To eliminate moisture, replace desiccant, then immediately vacuum system for charging per § 12-81.

1. Remove engine cowling per § 53-21.
2. Recover refrigerant per § 12-81, if not previously accomplished. Remove condenser cap and replace desiccant.
3. Install cap, special torque cap per § 20-33, and torque stripe.
4. Charge system with refrigerant per § 12-81.

12-83 Leak Detection

Leaks may be detected using several techniques, depending on equipment available. Leak detection should not be attempted with the aircraft/system running. In addition to safety hazards, leaks are more difficult to detect with the varying pressures and temperatures of an operating system.

An empty system should hold full vacuum (27 to 29 inches mercury vacuum at sea level) with no assistance from the vacuum pump for 20 minutes minimum. If a vacuumed system creeps up in pressure, a leak may be present. The technician should be thoroughly familiar with vacuum equipment to ensure leak is in aircraft system and not in vacuum equipment or connections.

Leaks in a charged system may be detected using a mild soap and water solution applied to lines and fittings in suspected leak areas (bubbles indicate leaks) or using commercially available electronic refrigerant detectors. Follow detector manufacturer's instructions. Large leaks may be detected audibly if area is quiet or by formation of frost in area of leak.

> NOTE
>
> Frost does not necessarily indicate a leak. Normal system operation and/or charging procedures can cause frost to accumulate on some components.

> NOTE
>
> System pressure is not a reliable indicator of charge state or the presence of leaks. Because R134a is a liquid/vapor mixture with the system at rest, pressure will remain constant as more liquid vaporizes until majority of charge is lost.

12-83 Leak Detection (continued)

Very small leaks can be detected by charging the system with helium gas. Helium molecules are smaller than R134a molecules and will leak more quickly. Charge system to 200 psi maximum. Use commercially available electronic helium detector or soap and water solution to locate leaks.

Leaks are most likely to occur at fittings and crimped transitions between hard line and flexible hose. Concentrate initial leak detection efforts in these areas.

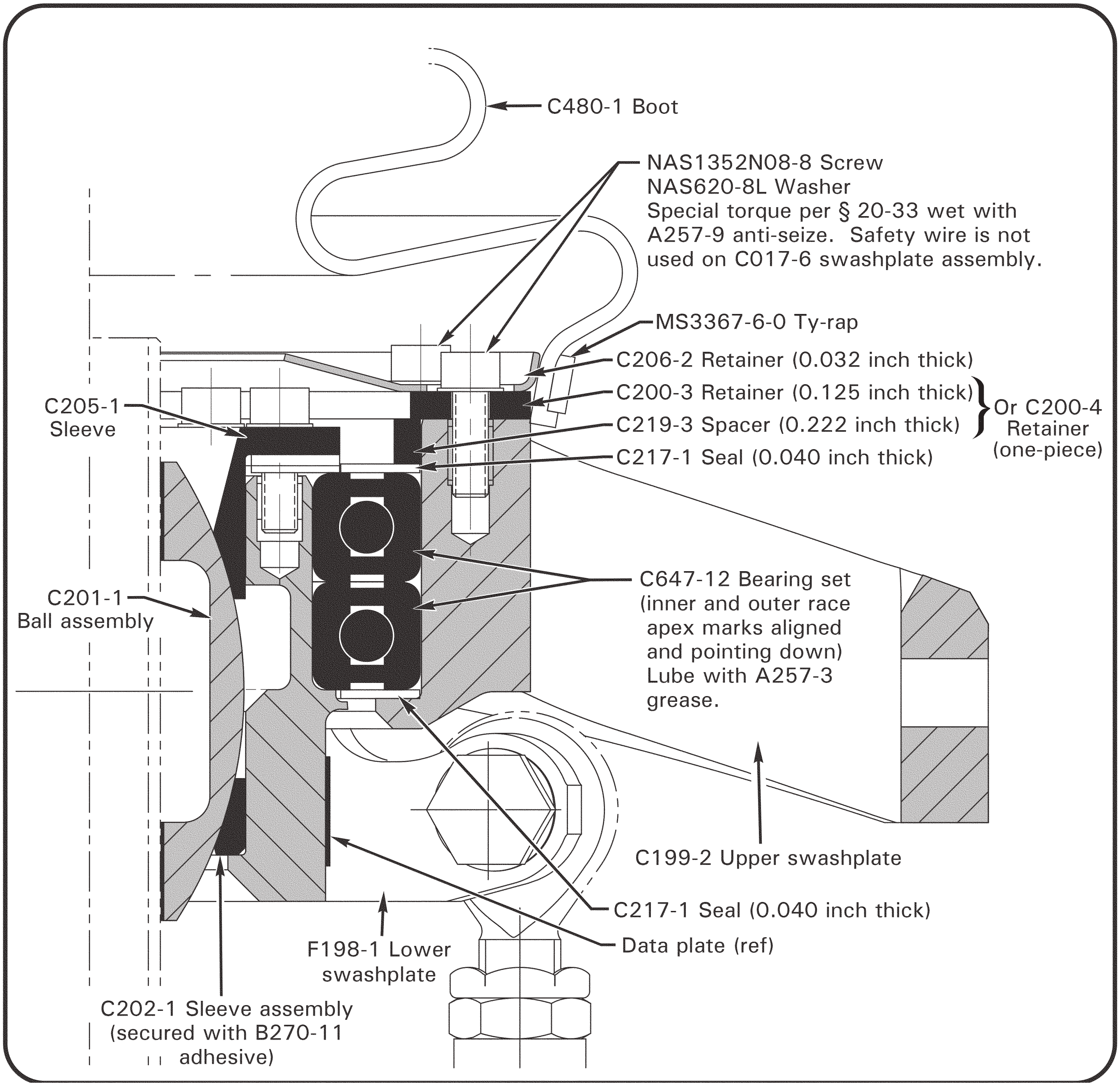

FIGURE 12-7 C017-6 REV AD OR LATER SWASHPLATE ASSEMBLY

12-90 Lubrication of Swashplate Bearings

1. Determine revision ("REV") letters on C017-6 swashplate data plate. If revision letters are "AD" or subsequent, proceed to step 2. If revision letters are "AA", "AB", or "AC", perform R66 Service Bulletin SB-30, if not previously accomplished.
2. Remove ty-rap securing C480 boot to upper (rotating) swashplate.
3. Remove hardware securing lower rod ends of both C258 pitch links to upper swashplate. Temporarily secure boot, upper A205 fork, and both pitch links up & away from swashplate.
4. Rotate upper swashplate by hand; if bearing roughness is detected, replace swashplate or submit swashplate to RHC for repair.
5. Refer to Figure 12-7. Remove (10) NAS1352 screws (with washers) securing C206-2 & C200-3 retainers to upper swashplate. Raise both retainers and C219-3 spacer and either temporarily secure to chord arm (if on helicopter) or set aside (if on workbench).
6. Using a 0.006 inch feeler gage, gently pry up outer edge of upper C217-1 seal and expose top ball bearing.
7. Using a syringe or grease gun, add A257-3 grease into cavity above bearing set until grease is just below top of C205-1 sleeve (approx. 20 ml grease). Do not allow grease into screw holes.
8. Position C217-1 seal atop grease followed by C219-3 spacer, C200-3 retainer, and NAS1352N08-8 screws with NAS620-8L washers. Finger-tighten all screws, then snug any (4) screws that are 90° apart, depressing seal and forcing grease into underlying bearing set. Rotate upper swashplate several revolutions. Wipe off excess grease.
9. Repeat steps 5 thru 8 <u>once</u>, then proceed to step 10.
10. Remove screws & washers and solvent-clean. Raise and clean C200-3 retainer and C219-3 spacer, then reinstall both.
11. Install C206-2 retainer, NAS620-8L washers, and NAS1352N08-8 screws with A257-9 anti-seize. Special torque screws per § 20-33.
12. Refer to IPC Figure 67-41. Connect upper A205 fork rod end and lower rod end of associated C258 pitch link, to interrupter-side swashplate ear; standard torque bolt per § 20-32. Install palnut, standard torque per § 20-32, and torque stripe per Figure 5-1.
13. Attach two A255-3 counterweights, and lower rod end of C258 pitch link, to swashplate ear opposite interrupter; standard torque bolt per § 20-32. Install palnut, standard torque per § 20-32, and torque stripe per Figure 5-1.
14. Verify safety washers (or counterweight) and C115 spacers installed at all rod ends per Figure 5-1.

12-90 Lubrication of Swashplate Bearings (continued)

WARNING

Assembly of flight controls is critical and requires inspection by a qualified person. If a second person is not available, RHC recommends the installer take a 5-minute break prior to inspecting flight control connections the installer has assembled.

15. While observing swashplate, have someone fully manipulate cyclic and collective controls. Verify swashplate movement corresponds with cyclic and collective movement, and without interference.
16. Position swashplate boot on upper swashplate and secure with MS3367-6-0 ty-rap.
17. With appropriately rated person at controls, start helicopter, run up to 100% N_R, then shutdown.
18. Remove ty-rap, and raise swashplate boot. Wipe off excess grease from swashplate. Position swashplate boot on upper swashplate and secure with MS3367-6-0 ty-rap.

CHAPTER 18

TRACK AND BALANCE

Section *Title* *Page*

18-10 Main Rotor Track and Balance 18.1
18-11 Preparing Helicopter for Main Rotor Track and Balance 18.3
18-12 Flight Checks 18.5
18-13 Track Adjustment 18.7
18-14 Balance Adjustment 18.10A
18-15 Troubleshooting 18.11
18-16 Autorotational RPM Adjustment 18.12
18-20 Tail Rotor Dynamic Balance 18.17
18-21 Preparing Helicopter for Tail Rotor Dynamic Balance 18.17
18-22 Ground Checks 18.19
18-23 Balance Adjustment 18.20
18-30 Main Rotor Flight Control Rigging 18.21
18-40 Main Rotor Blade Angle Rigging 18.23
18-41 Collective Travel 18.24
18-42 Cyclic Travel 18.26
18-50 Tail Rotor Flight Control Rigging 18.28
18-51 Pedals 18.28
18-52 Forward Bellcrank 18.28
18-53 Intermediate Bellcrank 18.28
18-60 Tail Rotor Blade Rigging 18.29
18-70 Fan Shaft and Engine Shaft Balancing 18.33
18-71 Preparing Helicopter for Fan Shaft and Engine Shaft Balancing 18.33
18-72 Ground Checks 18.35

Intentionally Blank

CHAPTER 18

TRACK AND BALANCE

18-10 Main Rotor Track and Balance

NOTE

Calibrate track and balance equipment per manufacturer's recommendation, at least once a year, or if equipment is dropped, misused, or calibration is suspect.

NOTE

The Chadwick-Helmuth Vibrex system, the TEC ACES system, the Dynamic Solutions Systems' MicroVib system, or equivalent equipment is required to perform dynamic rotor balancing and in-flight track checks.

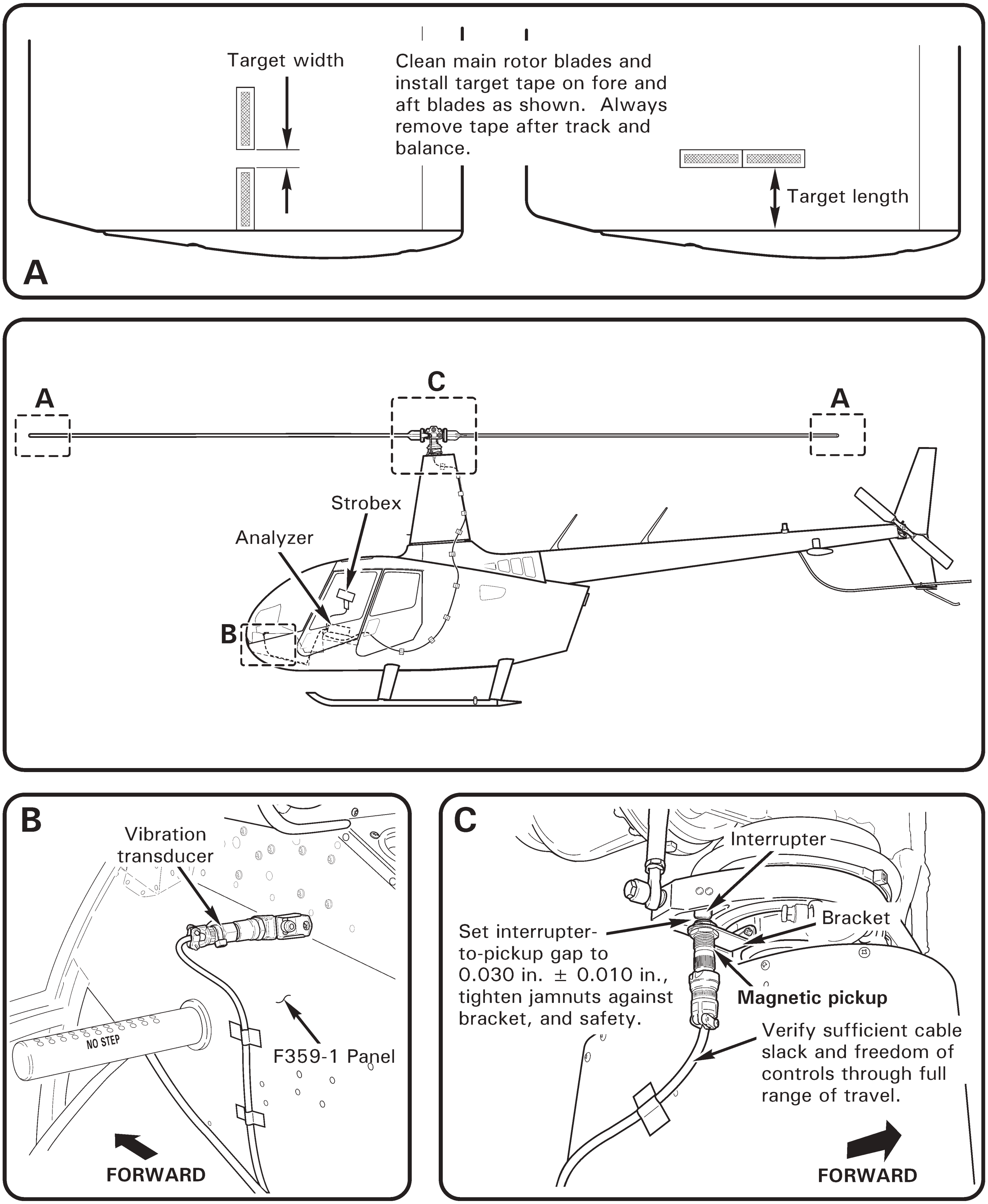

FIGURE 18-1 MAIN ROTOR BALANCING EQUIPMENT INSTALLATION

18-11 Preparing Helicopter for Main Rotor Track and Balance

NOTE

Use the following track & balance procedures in conjunction with approved equipment manufacturer's balancing instructions.

CAUTION

Cable security is critical; helicopter will be flown at V_{NE}.

1. Perform swashplate and rotor hub inspection per § 5-45. Inspect tail rotor rod ends and elastomeric bearings per §§ 5-33 and 5-34.
2. Clean main and tail rotor blades per § 20-10. Install main rotor blade target tape per Figure 18-1.
3. Refer to Figure 18-1. Using appropriate hardware, attach brackets to vibration transducer and attach assembly to F359-1 panel as shown. Remove removable controls.
4. Install magnetic pickup onto swashplate bracket. Set (swashplate-mounted) interrupter-to-pickup gap to 0.030 inch ± 0.010 inch and tighten pickup nuts against bracket. Safety nuts using 0.020-inch diameter lockwire. Recheck gap.
5. Pull collective stick full up, push cyclic stick full left, and apply frictions. Connect proper cable to magnetic pickup. Route cable down seam and to base of mast fairing, across the cabin roof left side, and through aft left door vent door. Attach cable to fuselage using MS21919WDG3 clamps and existing fasteners, or secure cable every 12 inches with duct tape. Release control frictions and verify sufficient cable slack and freedom of controls through full range of travel.
6. Connect proper cable to vibration transducer. Connect transducer, magnetic pickup, and tracker or strobe cables to analyzer. If strobe light is used, battery power may be accessed thru auxiliary power socket located on circuit breaker panel. Neatly stow and secure excess cables.
7. Verify security of installation.

DATE ____________ SERIAL NO. ____________

PAGE ____________

CHORD ARM WEIGHTS			
(1) A255-1 Weight	=	(8)	AN970-4 Washers
(1) A255-2 Weight	=	(3)	A255-1 Weights

TIP WEIGHTS			
(1) AN960-10 Washer	=	(2)	AN960-10L Washers
(1) C298-2 Weight	=	(5)	AN960-10 Washers
(1) C298-3 Weight	=	(11)	AN960-10 Washers
(1) C298-4 Weight	=	(4)	C298-3 Weights

TEETER HINGE SHIMS	
C117-8	0.012 inch
C117-9	0.015 inch
C117-10	0.020 inch
C117-11	0.025 inch

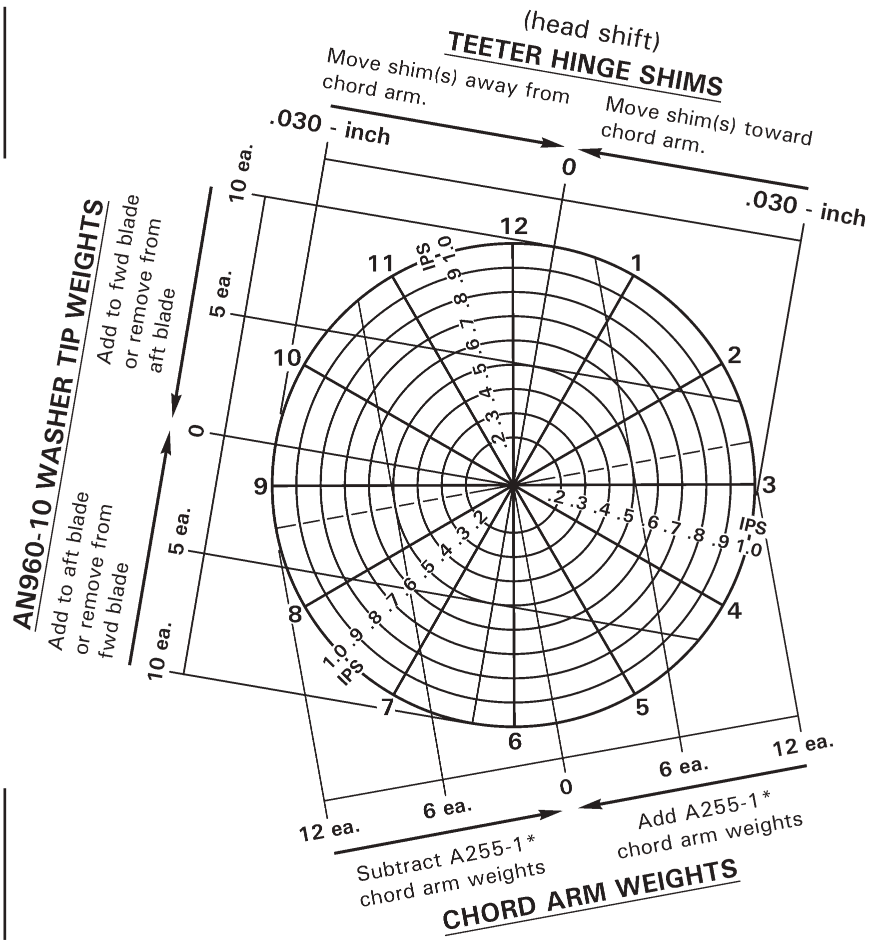

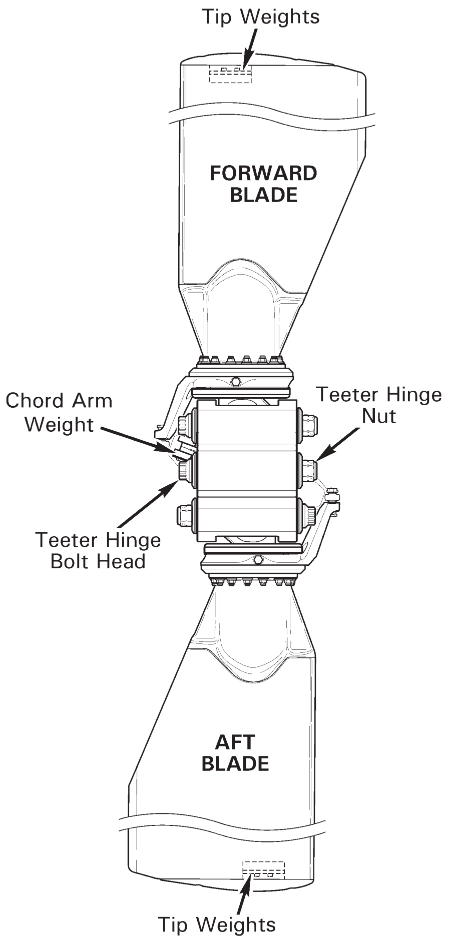

BALANCE		TRACK (KNOTS)										
CLOCK	IPS	HOVER	50	60	70	80	90	100	110	120	130	140

Adjustment: ____________

CLOCK	IPS	HOVER	50	60	70	80	90	100	110	120	130	140

Adjustment: ____________

CLOCK	IPS	HOVER	50	60	70	80	90	100	110	120	130	140

Adjustment: ____________

CLOCK	IPS	HOVER	50	60	70	80	90	100	110	120	130	140

FIGURE 18-2 MAIN ROTOR TRACK AND BALANCE CHART

18-12 Flight Checks

NOTE

Run-up and shutdown helicopter throughout procedure as required per R66 Pilot's Operating Handbook (POH) Section 4.

NOTE

Refer to § 18-15 for track & balance troubleshooting procedures.

WARNING

Tail rotor balancing equipment must be removed for flight.

WARNING

Do not exceed V_{NE} of helicopter during flight checks.

1. Prepare helicopter for main rotor track and balance per § 18-11.
2. As required, print Figure 18-2; use copy to record flight data. Check main rotor blade track in a hover and record data. Maximum permissible blade track difference in a hover is 0.25 inch. Adjust track per § 18-13 as required, record change, and recheck blade track in a hover. Repeat step as required until blade track is within limits.
3. Check main rotor balance in a hover and record data. Maximum vibration allowance is 0.2 ips (inches per second). Adjust balance per § 18-14 as required, record data, and recheck balance in a hover. Repeat step as required until main rotor balance is within limits.
4. Fly helicopter at 50 knots then increase in 10-knot increments up to $V_{NE.}$ Check main rotor blade track at each airspeed and record data. Maximum blade spread between airspeeds is 3/8 inch. Adjust trim tab(s) per § 18-13 as required and record data. Repeat step as required until blade track is within limits.
5. Recheck main rotor balance in a hover per step 3.
6. Perform autorotation RPM check per § 18-16. Recheck main rotor balance in a hover per step 3.
7. Evaluate collective trim, longitudinal cyclic trim, and lateral cyclic trim. Replace D918 cord assemblies as required. Recheck main rotor balance in a hover per step 3.
8. Remove track and balance equipment. Torque stripe fasteners per Figure 5-1. Reinstall removable controls, as required.

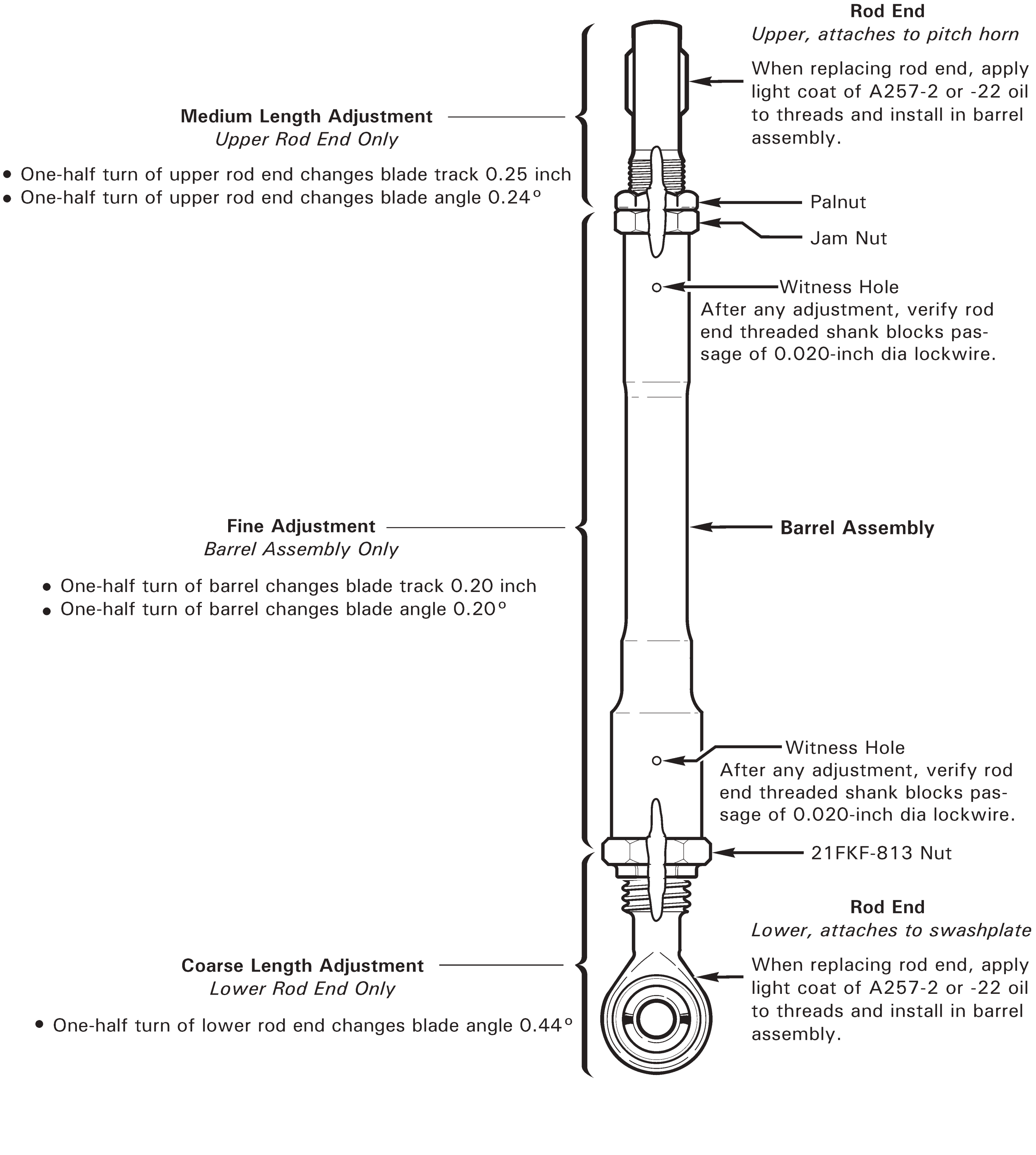

FIGURE 18-3A C258-5 MAIN ROTOR PITCH LINK

18-13 Track Adjustment

A. Main Rotor Blade Pitch Link

NOTE

Shorten high pitch blade when adjusting track in a hover.

NOTE

During rigging, adjust both pitch links exactly the same for collective adjustments.

1. For fine adjustment:

   a. C258-5 Pitch Link: Adjust barrel assembly only per the following steps:

      i. Refer to Figure 18-3A. Using backup wrench on barrel assembly, loosen 21FKF-813 nut at lower rod end, and upper rod end palnut and jam nut.

      ii. Rotate barrel assembly to shorten or lengthen pitch link as required. One-half turn of barrel changes blade track approximately 0.20 inch. One-half turn of barrel changes blade angle approximately 0.20°. For finer adjustment, rotate less than one-half turn as required.

      iii. Refer to Figure 5-1. Verify rod end threaded shank blocks passage of 0.020-inch diameter lockwire through barrel assembly witness holes.

      iv. Position rod ends to allow as much pitch link rotation as possible without binding. Using backup wrench on barrel assembly, special torque 21FKF-813 nut per § 20-33, and standard torque upper rod end jam nut and palnut per § 20-32.

      v. Repeat steps on opposite pitch link as required; torque stripe per Figure 5-1.

   b. C258-1 Pitch Link: Adjust fitting only per the following:

      i. Refer to Figure 18-3B. Cut and discard pitch link assembly safety wire. Using backup wrench on link assembly, loosen 21FKF-813 nut; using backup wrench on fitting, loosen upper rod end palnut and jam nut.

      ii. Rotate fitting to shorten or lengthen pitch link as required. One-half turn of fitting changes blade track approximately 0.20 inch. One-half turn of fitting changes blade angle approximately 0.20°. For finer adjustment, rotate less than one-half turn as required.

      iii. Refer to Figure 5-1. Verify rod end threaded shank blocks passage of 0.020-inch diameter lockwire through pitch link witness holes.

      iv. Using backup wrench on link assembly, special torque 21FKF-813 nut per § 20-33. Using backup wrench on fitting, standard torque upper rod end jam nut and palnut per § 20-32. Safety fitting to link assembly using 0.032-inch diameter lockwire.

      v. Repeat steps on opposite pitch link as required; torque stripe per Figure 5-1.

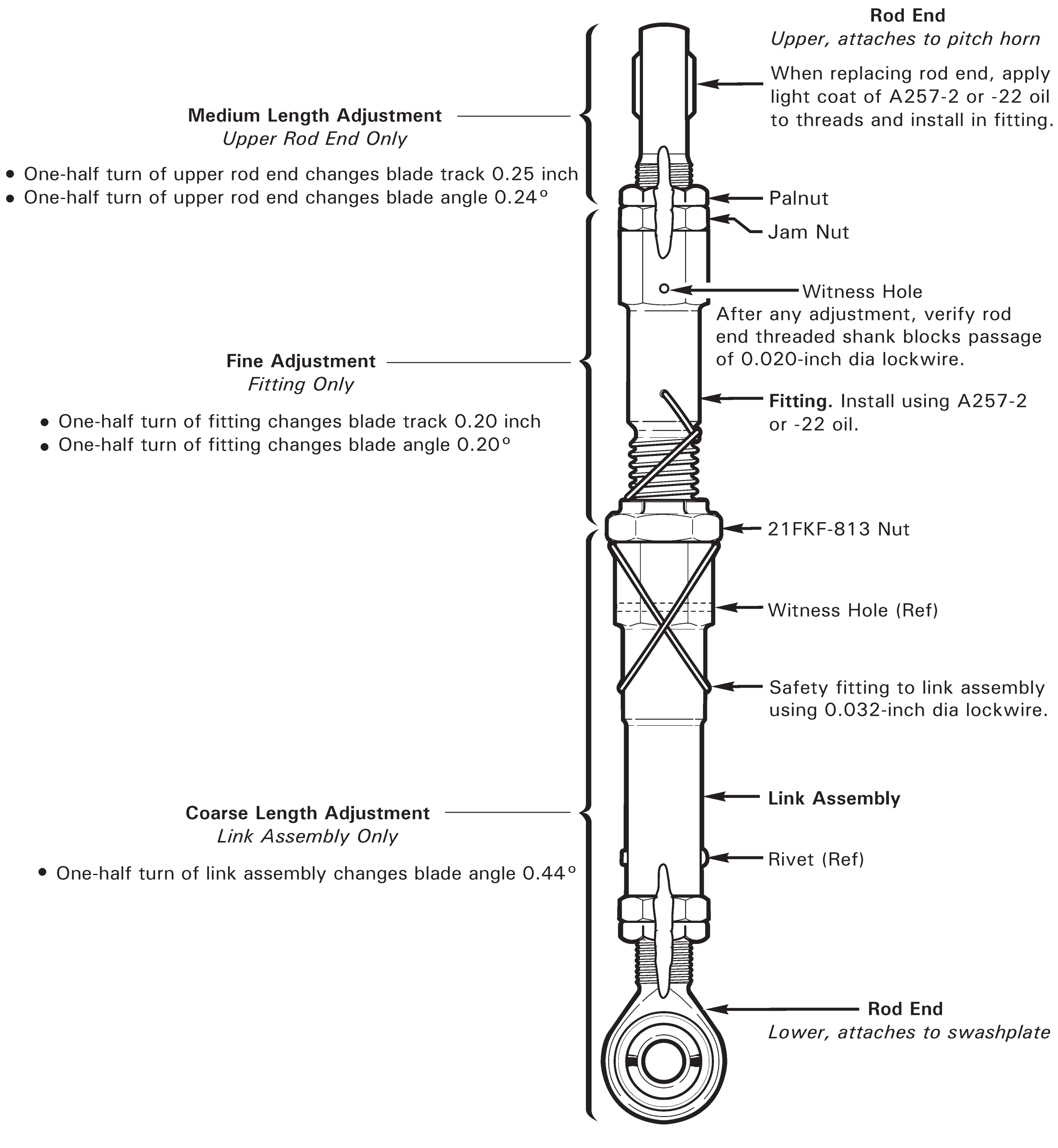

FIGURE 18-3B C258-1 MAIN ROTOR PITCH LINK

18-13 Track Adjustment (continued)

A. Main Rotor Blade Pitch Link (continued)

2. For medium length adjustment, adjust upper rod end per the following:

   a. Refer to Figure 18-3A or 18-3B. Using backup wrench on barrel assembly or fitting, loosen upper rod end palnut and jam nut. Remove hardware securing rod end to pitch horn.

   b. Rotate upper rod end to shorten or lengthen pitch link as required. One-half turn of upper rod end changes blade track approximately 0.25 inch. One-half turn of upper rod end changes blade angle by approximately 0.24°.

   c. Refer to Figure 5-1. Verify rod end threaded shank blocks passage of 0.020-inch diameter lockwire through barrel asssembly (upper), or fitting, witness hole. Install hardware securing rod end to pitch horn and standard torque fasteners per § 20-32.

   d. Position rod ends to allow as much pitch link rotation as possible without binding. Using backup wrench on barrel assembly or fitting, standard torque upper rod end jam nut and palnut per § 20-32.

   e. Repeat steps on opposite pitch link as required; torque stripe per Figure 5-1.

3. For coarse length adjustment:

   a. C258-5 Pitch Link: Adjust lower rod end per the following:

      i. Refer to Figure 18-3A. Using backup wrench on barrel assembly, loosen 21FKF-813 nut at lower rod end. Remove hardware securing lower rod end to swashplate.

      ii. Rotate lower rod end to shorten or lengthen pitch link as required. One-half turn of lower rod end changes blade angle by approximately 0.44°.

      iii. Refer to Figure 5-1. Verify rod end threaded shank blocks passage of 0.020-inch diameter lockwire through barrel asssembly (lower) witness hole. Install hardware securing rod end to swashplate and standard torque fasteners per § 20-32.

      iv. Position rod ends to allow as much pitch link rotation as possible without binding. Using backup wrench on barrel assembly, special torque 21FKF-813 nut per § 20-33.

      v. Repeat steps on opposite pitch link as required; torque stripe per Figure 5-1.

18-13 Track Adjustment (continued)

A. Main Rotor Blade Pitch Link (continued)

3. b. C258-1 Pitch Link: Adjust link assembly per the following:

i. Refer to Figure 18-3B. Cut and discard pitch link assembly safety wire. Using backup wrench on link assembly, loosen 21FKF-813 nut. Remove hardware securing lower rod end to swashplate.

ii. Rotate link assembly to shorten or lengthen pitch link as required. One-half turn of link assembly changes blade angle by approximately 0.44°.

iii. Refer to Figure 5-1. Verify rod end threaded shank blocks passage of 0.020-inch diameter lockwire through link assembly witness hole. Install hardware securing rod end to swashplate and standard torque fasteners per § 20-32.

iv. Position rod ends to allow as much pitch link rotation as possible without binding. Using backup wrench on link assembly, special torque 21FKF-813 nut per § 20-33. Safety fitting to link assembly using 0.032-inch diameter lockwire.

v. Repeat steps on opposite pitch link as required; torque stripe per Figure 5-1.

Intentionally Blank

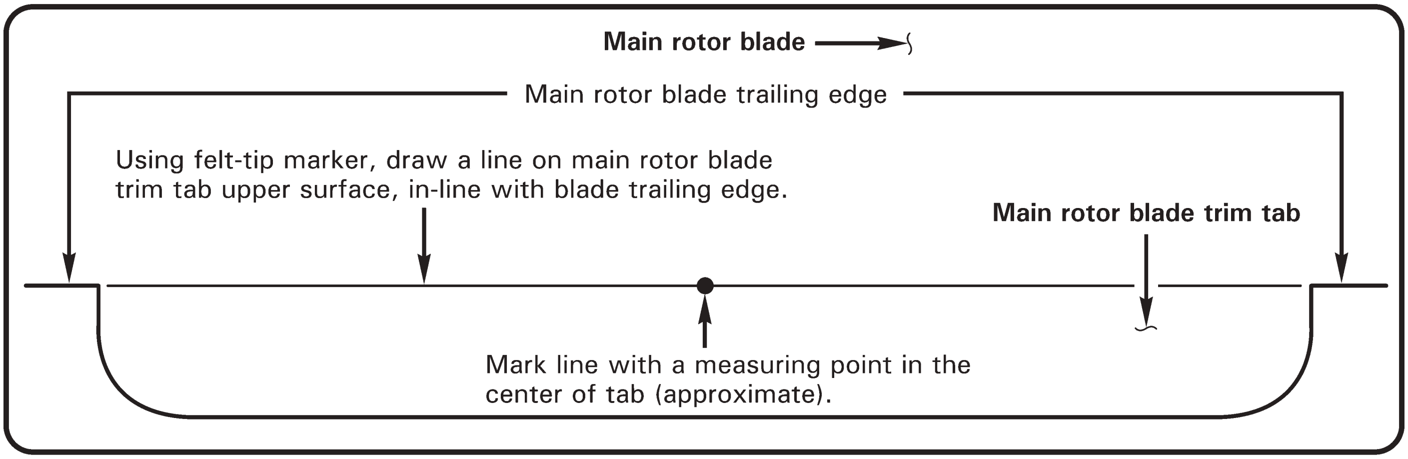

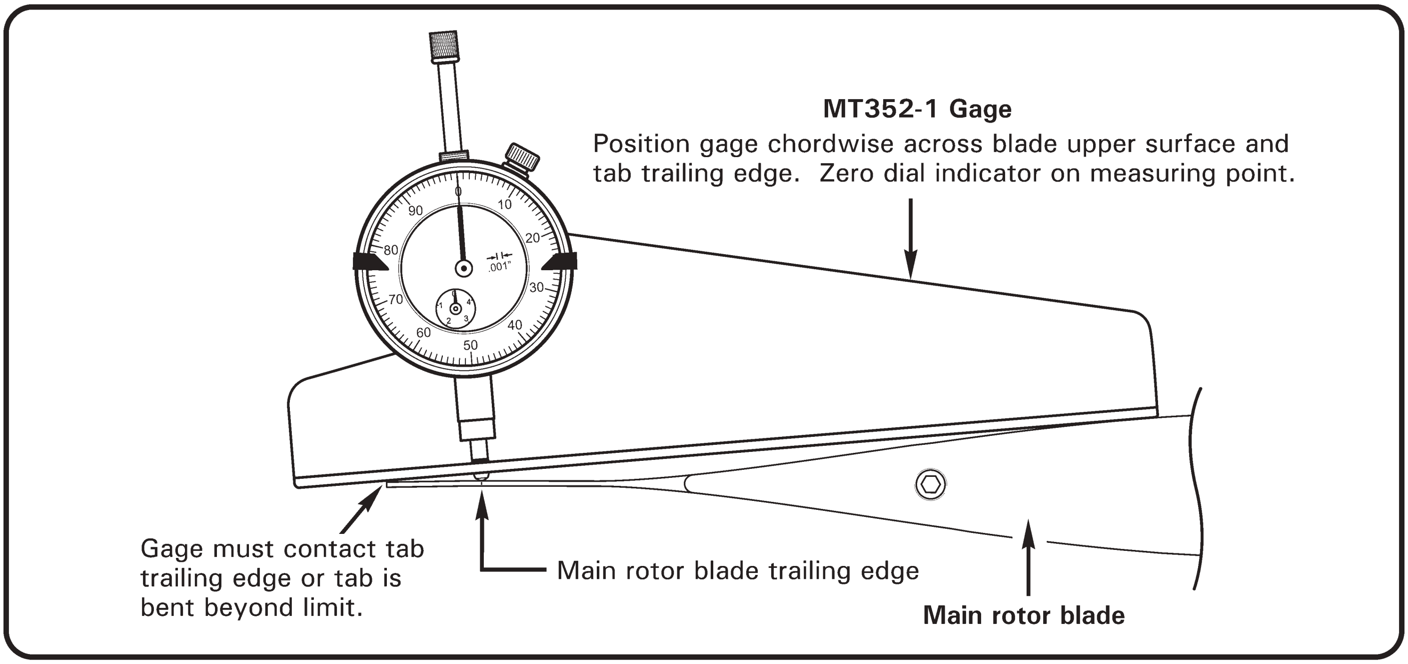

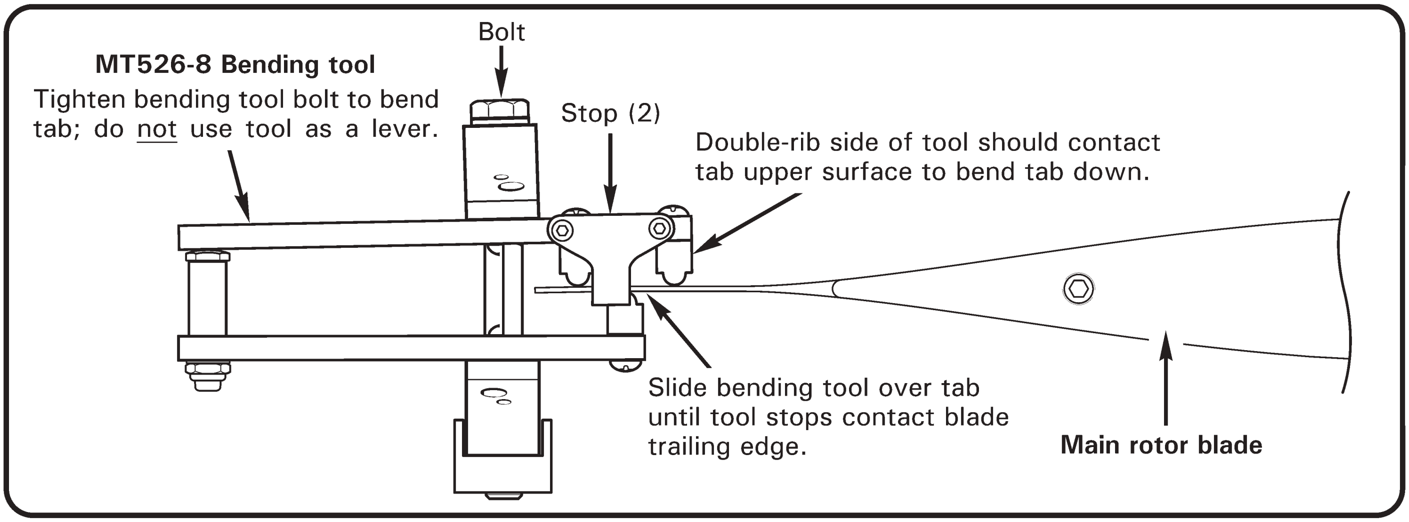

FIGURE 18-4 MAIN ROTOR BLADE TRIM TAB

18-13 Track Adjustment (continued)

B. Main Rotor Blade Trim Tab

NOTE

To correct for a "climbing" blade condition (blade spread that exceeds 3/8 inch with forward airspeed), bend high blade trim tab down.

CAUTION

Do not use other helicopter manufacturers' trim tab bending tools. Use of these tools will damage Robinson blades.

CAUTION

MT352-1 gage must contact trim tab trailing edge. If gage does not contact tab trailing edge, tab is bent beyond limit.

CAUTION

Tighten MT526-8 bending tool bolt to bend tab; do not use tool as a lever.

CAUTION

Bend tab upward only when absolutely necessary; bending tab upward can increase rotor vibration.

1. Using felt tip marker, ink mark main rotor blade trim tab per Figure 18-4. Mark line with a measuring point in the center of the tab (approximate).
2. Position MT352-1 gage chordwise across blade upper surface and tab trailing edge. Zero dial indicator on measuring point.
3. Position MT526-8 bending tool on tab per Figure 18-4. Slide tool completely over tab until tool stops contact blade trailing edge. Double-rib side of tool should contact tab upper surface to bend tab down. Double-rib side of tool should contact tab bottom surface to bend tab up.
4. Tighten MT526-8 bending tool bolt to bend tab. Make slight bends and re-measure tab with MT352-1 gage. Bend trim tab 0.015 inch (down) to effect dynamic movement of main rotor blade tip approximately 0.2 inch (downward).

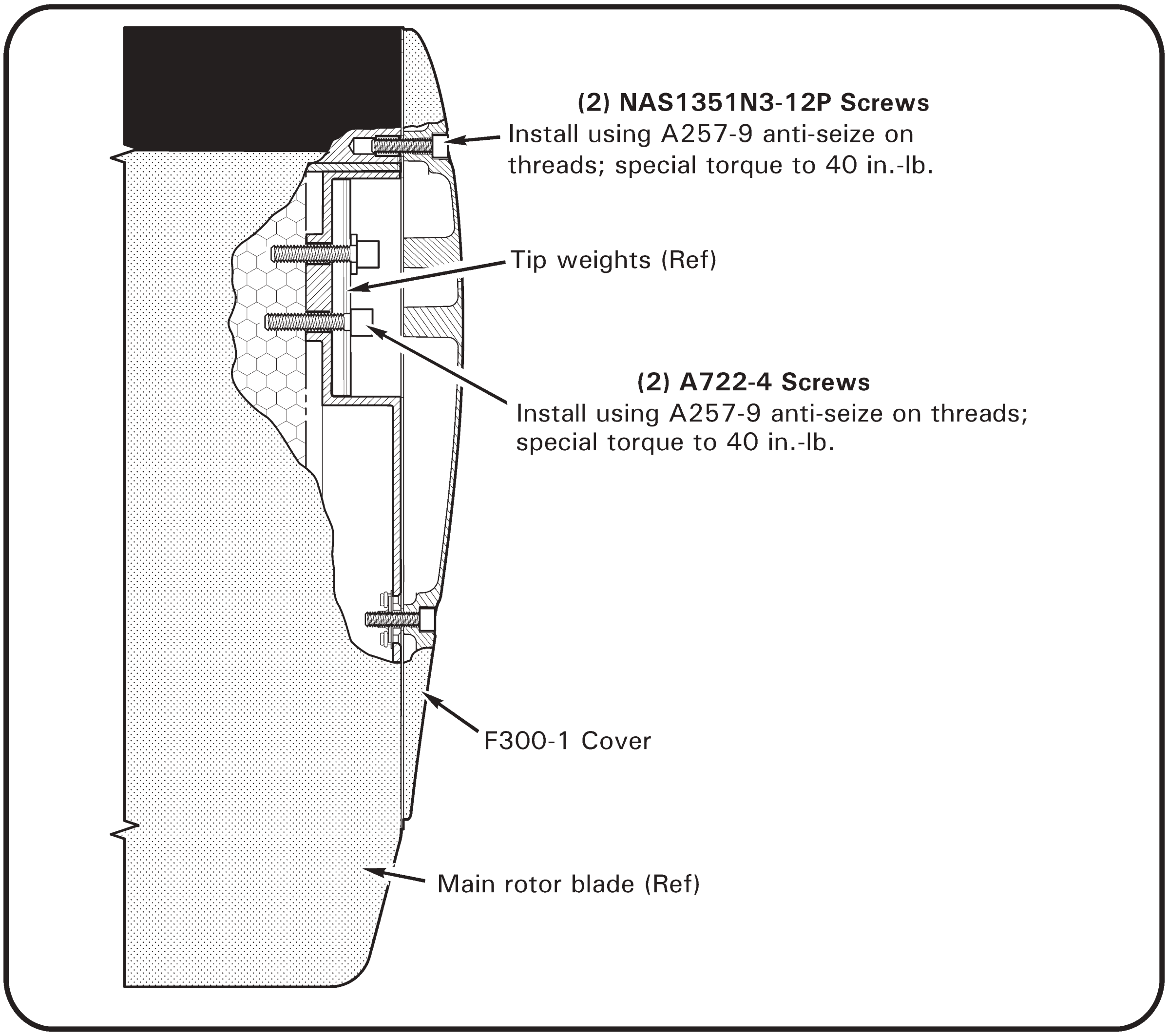

FIGURE 18-4A MAIN ROTOR BLADE TIP

18-14 Balance Adjustment

> **WARNING**
>
> **A rotor which is smooth after balancing but goes out of balance within a few flights is suspect and must be examined by RHC before further flight.**

A. Tip Weights (Spanwise Balance Adjustment)

1. Remove screws securing tip cover to blade. Balance rotor assembly spanwise by adjusting tip weights as required per Figure 18-2. Washers may be trimmed. Refer to Figure 18-4A. Apply light coat A257-9 anti-seize to threads and install screws securing tip weights to blade; special torque screws to 40 in.-lb. Apply light coat A257-9 anti-seize to threads and install screws securing tip cover to blade; special torque screws to 40 in.-lb.

(1) AN960-10 or NAS1149F0363P Washer	=	(2) AN960-10L or NAS1149F0332P Washers
(1) C298-2 Weight	=	(5) AN960-10 or NAS1149F0363P Washers
(1) C298-3 Weight	=	(11) AN960-10 or NAS1149F0363P Washers
(1) C298-4 Weight	=	(4) C298-3 Weights

B. Teeter Hinge Bolt Shims (Chordwise Balance Adjustment - Coarse Adjustment)

1. Remove and discard teeter hinge nut cotter pin. Remove nut, thrust washer, and any shims.
2. Have two people cone the main rotor blades. Push out teeter hinge bolt (and any shims) with another bolt.
3. Balance rotor assembly chordwise by moving (or exchanging) existing teeter hinge shims to other side of bolt (under head or under nut) as required per Figure 18-2. Install teeter hinge bolt per § 62-10.

C. Chord Arm Weight (Chordwise Balance Adjustment - Fine Adjustment)

1. Balance rotor assembly chordwise by adjusting chord arm weights or washers per Figure 18-2. Total weight not to exceed four A255-2 weights (or equivalent).

(1) A255-1 Weight	=	(8) AN970-4 Washers
(1) A255-2 Weight	=	(3) A255-1 Weights

Intentionally Blank

18-15 Troubleshooting

The following are some of the symptoms and corrections which occur in the Track and Balance operations of the helicopter. Decide on the various causes of a given trouble and then eliminate causes one by one, beginning with the most probable.

	Symptom	Probable Cause	Correction
1.	Excessive Cyclic or Stick Shake	Main rotor (MR) out of track.	Track and balance per Section 18-10.
		Rough or binding A205-7 fork assembly (upper swashplate).	Replace or refer to Section 67-40.
		Brinelled spindle bearing (rough movement).	Send blade(s) to RHC for spindle bearing replacement.
		Rough blade surface (chipped paint).	Repair blades per Section 62-60.
		Rough or binding pitch links.	Replace pitch link rod ends
		MR blade boot misaligned.	Realign or replace boot per Section 62-11.
		MR teeter or coning hinge binding.	Replace bearings per Section 62-21.
		MR blade trim tabs bent upward.	Bend trim tabs evenly down per Section 18-13.
		Blade mismatch.	Send blade(s) to RHC for replacement.
2.	Excessive Ship Vibration	MR out of track and balance.	Track and balance per Section 18-10.
		MR teeter or coning hinge friction.	Adjust hinge friction per Section 62-32.
		MR teeter or coning hinge binding.	Replace bearings per Section 62-21.
		Brinelled spindle bearing (rough movement).	Send blade(s) to RHC for spindle bearing replacement.
		MR teeter hinge bearings worn.	Replace bearings per Section 62-21.
3.	Excessive Cyclic Stick Forces	Brinelled spindle bearing (rough movement).	Send blade(s) to RHC for spindle bearing replacement.
4.	Intermittent Blade Track Picture	MR teeter or coning hinge friction	Adjust hinge friction per Section 62-32.
		MR coning hinge binding.	Replace bearings per Section 62-21.
		MR teeter hinge not "broken-in."	Track and balance per Section 18-10. Adjust track to minimize error.
		Brinelled spindle bearing (rough movement).	Send blade(s) to RHC for spindle bearing replacement.
5.	Radical Changes to Cyclic Trim	MR teeter hinge bearings worn.	Replace bearings per Section 62-21.
		Brinelled spindle bearing (rough movement).	Send blade(s) to RHC for spindle bearing replacement.

18-16 Autorotational RPM Adjustment

Use the following procedure for checking and adjusting autorotational RPM:

> **WARNING**
>
> **Failure to properly adjust autorotational RPM (RPM too low) may prevent the rotorcraft from achieving proper RPM at low gross weights.**

1. Perform autorotation RPM check at minimum practical gross weight (less than 1900 lb). Calculate the takeoff gross weight of the helicopter. Record the time on the hourmeter.

   Take-Off gross weight: ______________________

   Take-Off hourmeter reading: ______________________

2. Set the altimeter to 29.92" Hg (1013.2 millibars) prior to performing the autorotation. Autorotate with the collective control firmly held against the down stop with an airspeed of 50 KIAS.

> **WARNING**
>
> **Do not allow the rotor to overspeed when performing autorotation checks. Progressively lengthen both main rotor pitch link rod ends until full down collective can be obtained without overspeeding the rotor.**

Take at least 3 RPM readings at 500 to 1000 foot altitude intervals.

Record the following in-flight data:

Test #	Hourmeter Reading	OAT	Pressure Altitude	Test % RPM
1	______	_____	______	______
2	______	_____	______	______
3	______	_____	______	______
4	______	_____	______	______
5	______	_____	______	______

18-16 Autorotational RPM Adjustment (continued)

3. After test flight, determine the following:

Test #	1	2	3	4	5
Elapsed Time *(in-flight hourmeter reading minus take-off hourmeter reading):*					
Pounds of Fuel Consumed *(elapsed time x 140 lb/hr):*					
Test Gross Weight *(take-off gross weight minus fuel consumed):*					
Test Longitudinal Center of Gravity:					
Chart % RPM*:					
Test % RPM *(from in-flight data):*					
RPM Correction *(chart % RPM minus test % RPM):*					

*Perform step 4 to obtain value.

4. Refer to Figure 18-5. To find Chart % RPM, perform the following:
   a. Start at outside air temperature, and draw a vertical line up to pressure altitude.
   b. Draw a horizontal line from pressure altitude to rotorcraft gross weight at time of autorotation.
   c. Draw a vertical line down from autorotation gross weight to required auto RPM.
5. Adjust pitch links based on average RPM correction required. Lengthen both pitch links to decrease RPM if test RPM is greater than chart RPM; shorten both pitch links to increase RPM. One full rod end turn will change RPM approximately 3½%. Adjust both pitch links exactly the same so track will not be affected.
6. Repeat previous steps as required until the RPM correction is ± 1% of chart RPM.

AUTOROTATION RPM

COLLECTIVE FULL DOWN

50 KIAS

One full turn of rod ends = approximately 3½% RPM change

One full turn of rod end = 1⅙ turns of barrel

Example: OAT = 20°C, Hp = 2000 ft, GW = 1800 lb, RPM = 103%

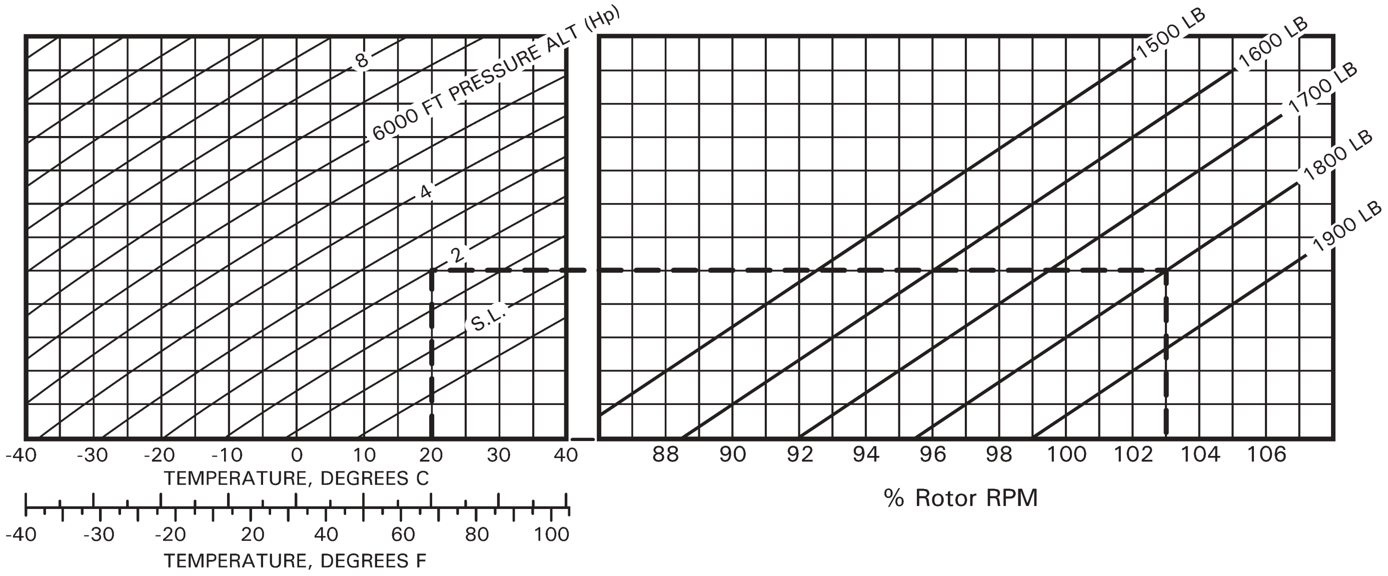

FIGURE 18-5 AUTOROTATION RPM ADJUSTMENT

Intentionally Blank

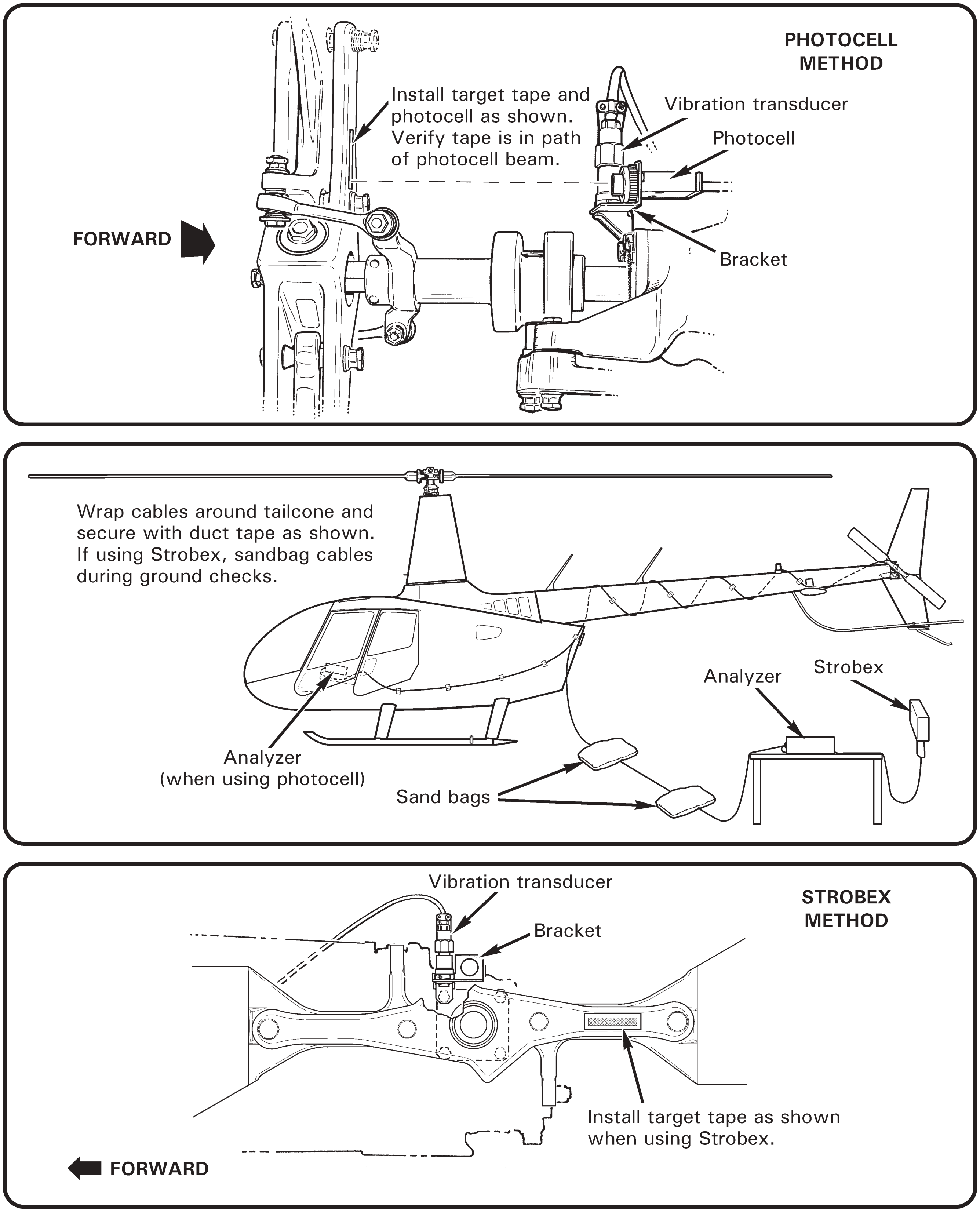

FIGURE 18-6 TAIL ROTOR BALANCING EQUIPMENT INSTALLATION

18-20 Tail Rotor Dynamic Balance

NOTE

Calibrate track and balance equipment per manufacturer's recommendation, at least once a year, or if equipment is dropped, misused, or calibration is suspect.

NOTE

The Chadwick-Helmuth Vibrex system, the TEC ACES system, the Dynamic Solutions Systems' MicroVib system, or equivalent equipment is required to perform dynamic rotor balancing and in-flight track checks.

18-21 Preparing Helicopter for Tail Rotor Dynamic Balance

NOTE

Use the following balance procedures in conjunction with approved equipment manufacturer's balancing instructions.

WARNING

Ensure cable(s) cannot entangle tail rotor.

1. Clean tail rotor blades per § 20-10. Inspect tail rotor rod ends and elastomeric bearings per §§ 5-33 and 5-34.
2. Track tail rotor blades per § 18-60, steps 3 & 4. Remove tracking stick.
3. Refer to Figure 18-6. If using photocell to obtain clock angle, install a target tape spanwise on inboard side of one arm of tail rotor hub; if using Strobex, install a target tape spanwise on outboard side of hub.
4. Using appropriate hardware, attach bracket(s) to vibration transducer, and photocell, if used. Secure bracket to tail rotor gearbox output shaft cap at forward, top attachment bolt. Orient vibration transducer vertically.
5. Connect cable(s) to transducer, and photocell, if used. Route cable(s) forward and into cabin; wrap around tailcone several times, and secure with duct tape. If using Strobex, route cable to a position located approximately 20 feet to left of tail rotor. Place sandbags (or similar) on cable to prevent cable movement.
6. Connect cable(s) to balancer. Verify security of installation.

DATE ____________ SERIAL NO. ____________

PAGE ____________

PITCH HORN-TO-PITCH LINK FASTENER (CHORDWISE) WEIGHTS			
(1) NAS1149F0463P Washer	=	(2)	NAS1149F0432P Washers
(1) A214-3 Washer	=	(3.5)	NAS1149F0432P Washers
(1) A141-14 Washer	=	(5)	NAS1149F0432P Washers

BLADE-TO-HUB OUTBOARD FASTENER (SPANWISE) WEIGHTS			
(1) C141-23 Washer	=	(3.5)	NAS1149F0663P Washers
(1) C141-24 Washer	=	(7)	NAS1149F0663P Washers
(2) NAS1149F0632P		(1)	NAS1149F0663P Washer

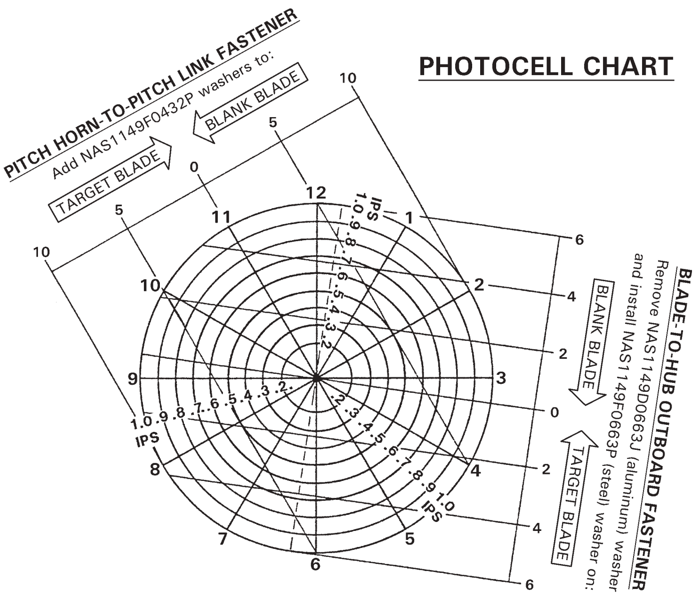

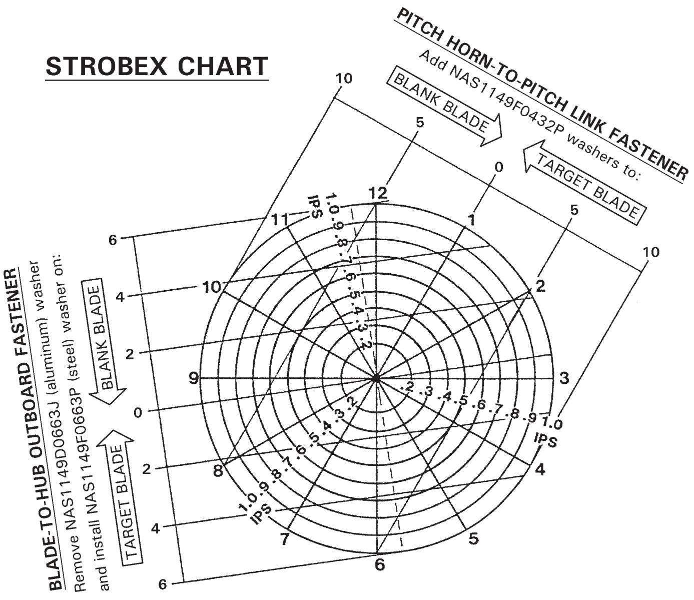

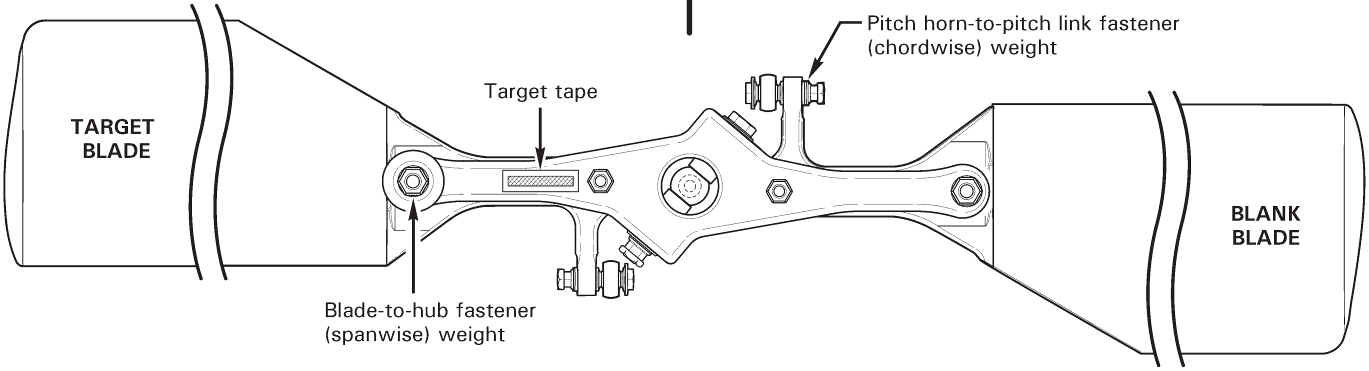

BALANCE	
CLOCK	IPS

ADJUSTMENT: ______________________________

CLOCK	IPS

ADJUSTMENT: ______________________________

CLOCK	IPS

ADJUSTMENT: ______________________________

CLOCK	IPS

ADJUSTMENT: ______________________________

FIGURE 18-7 TAIL ROTOR DYNAMIC BALANCE CHART

18-22 Ground Checks

NOTE

Run-up and shutdown helicopter throughout procedure as required per R66 Pilot's Operating Handbook (POH) Section 4.

NOTE

Use the following balancing procedures in conjunction with approved equipment manufacturer's balancing instructions.

WARNING

Tail rotor balancing equipment must be removed for flight.

1. Prepare helicopter for tail rotor dynamic balance per § 18-21.
2. As required, print Figure 18-7; use copy to record ground check data. Check tail rotor balance at 99–101% RPM on ground and record data. Maximum vibration allowance is 0.2 ips (inches per second). (If using Chadwick-Helmuth system, set Function Knob on Balancer to appropriate channel, set balancer RPM Range knob to X10, and set RPM to 231. During ground run, view tail rotor assembly target tape through Strobex and tune Balancer by adjusting RPM dial.)
3. Adjust balance per § 18-23 as required, record change, and recheck balance. Repeat steps 2 and 3 as required until tail rotor balance is within limits.
4. Remove track and balance equipment. Install tail rotor gearbox output shaft cap forward, top attachment bolt and special torque per § 20-33. Install 0.032-inch diameter lockwire securing cap retaining hardware and safety in pairs.

WARNING

A rotor which is smooth after balancing but goes out of balance within a few flights is suspect and must be examined by RHC before further flight.

18-23 Balance Adjustment

Refer to R66 Illustrated Parts Catalog (IPC) Figure 64-1. Refer to § 64-11 for tail rotor assembly static balance procedure.

A. Pitch Horn-to-Pitch Link Fastener (Chordwise Balance Adjustment)

Chordwise dynamic balance is achieved by varying NAS6604 bolt length and nut-side washers on tail rotor blade pitch horn-to-pitch link fastener. Select bolt length and washers as required to balance tail rotor assembly chordwise per Figure 18-7. Standard torque nut and palnut per § 20-32, but do not torque stripe until after correct balance is achieved.

B. Blade-to-Hub Outboard Fastener (Spanwise Balance Adjustment)

Spanwise dynamic balance is achieved by varying nut-side washer size on tail rotor blade-to-hub outboard fastener. Four washers are required under outboard nuts. Select a combination of four washers to balance tail rotor assembly spanwise per Figure 18-7, placing largest washers closest to hub assembly. Standard torque nuts and palnuts per § 20-32, but do not torque stripe until after correct balance is achieved.

18-30 Main Rotor Flight Control Rigging

Cyclic stick travel is limited by A211-4 stop and is not adjustable. Collective stick travel is limited by A333-1 stop and is not adjustable. This procedure ensures blade angles are correct at cyclic stick & collective stick travel limits.

> NOTE
>
> Refer to § 5-33, and Figures 5-1 & 5-2 for standard rod end adjustment procedures. Refer to § 18-13 for main rotor pitch link adjustment procedure.
>
> For collective adjustments, both pitch links must be adjusted exactly the same.
>
> Track and balance helicopter per §§ 18-10 & 18-20 as required after adjusting flight controls.

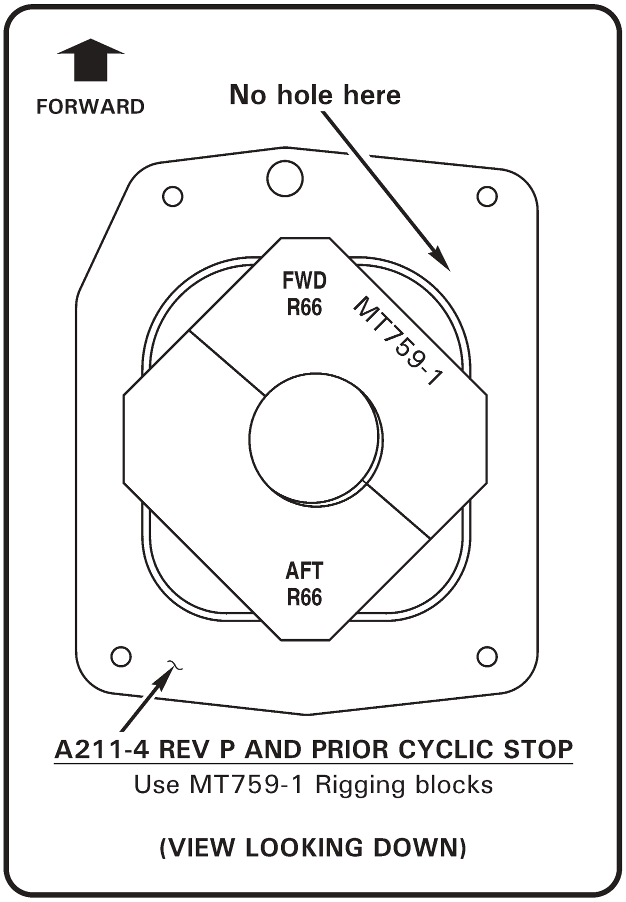

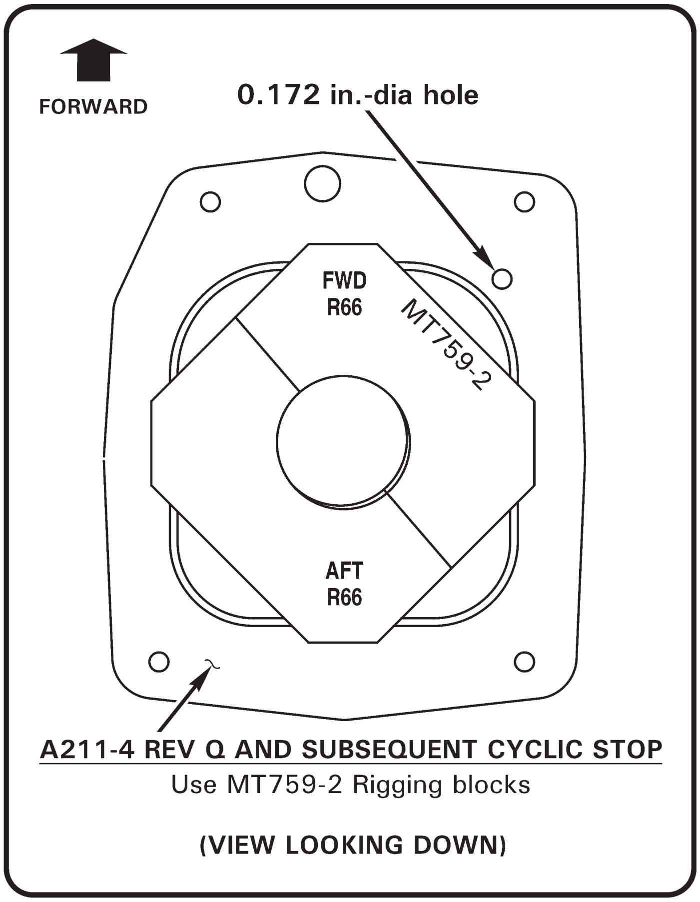

FIGURE 18-7A CYCLIC RIGGING

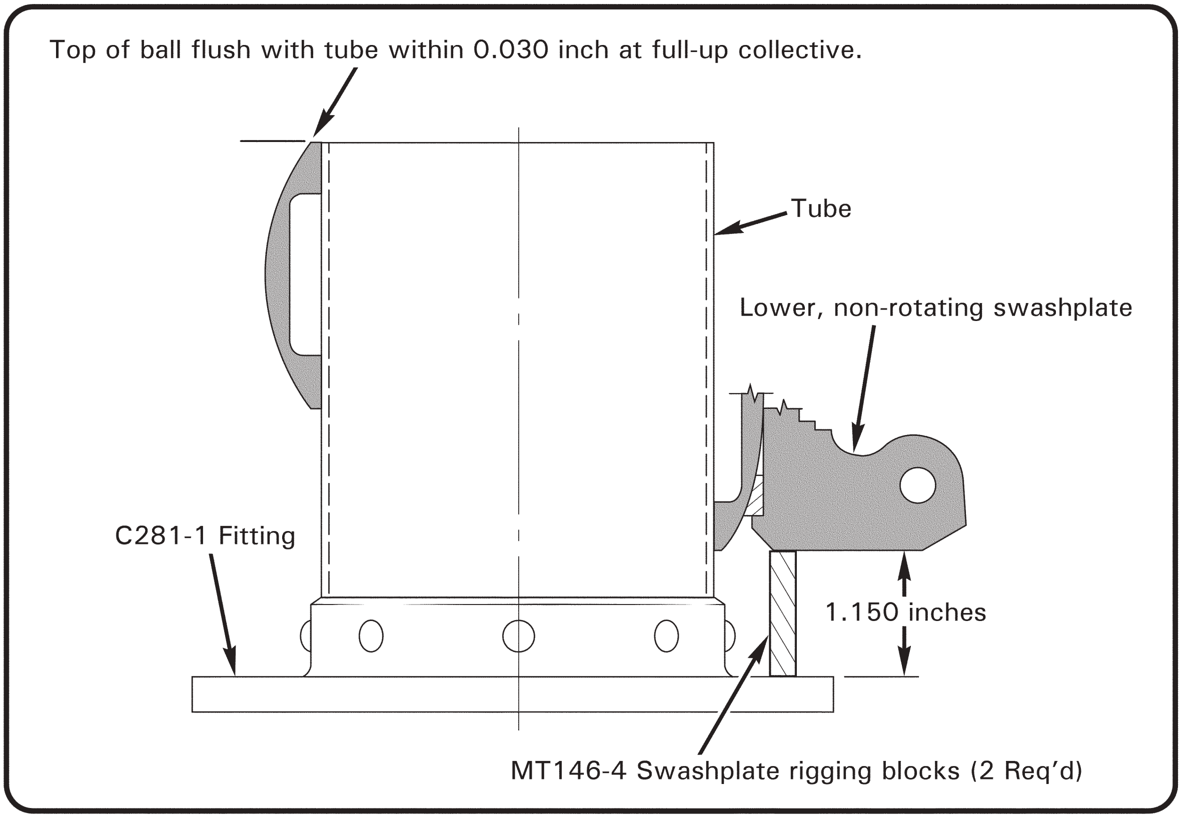

FIGURE 18-8 LOWER SWASHPLATE CLEARANCE

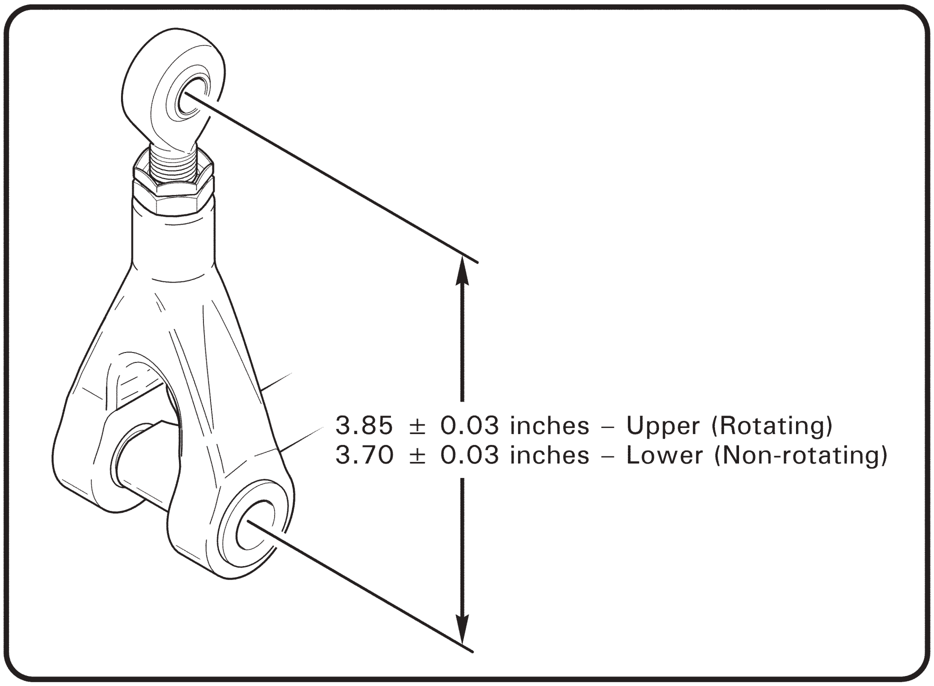

FIGURE 18-9 A205-7 FORK DIMENSIONS FOR SWASHPLATE SCISSORS

18-30 Main Rotor Flight Control Rigging (continued)

1. Refer to Figure 18-9. Adjust swashplate A205-7 lower fork assembly (non-rotating) to 3.70 ± 0.03 inches, and upper fork assembly (rotating) to 3.85 ± 0.03 inches.
2. Adjust the following push-pull tube assemblies and fork assembly, located between keel panels, to the noted rod end centerline-to-centerline dimensions:

PART NUMBER		DIMENSION
C121-1	=	51.13 ± 0.03 inches
F121-1	=	32.26 ± 0.03 inches
G205-1	=	5.40 ± 0.03 inches

3. With collective full up, adjust length of F121-1 tube so there is a 0.50 ± 0.03 inch gap between G205-1 yoke and F334-1 support assembly.
4. Verify hydraulic servo rigging meets Figure 29-3 requirements; adjust per § 29-30 Part B, as required.
5. Refer to Figure 18-7A. Install MT759-1 or MT759-2 rigging blocks inside A211-4 cyclic stop. Apply cyclic stick friction. Raise collective approximately half way.
6. Refer to Figure 18-8. Position MT146-4 swashplate rigging blocks between lower, non-rotating swashplate and C281-1 fitting.
7. Slowly lower collective stick full down or until lower swashplate contacts rigging blocks, whichever occurs first.
8. Disconnect (3) F121-3 push-pull tubes from lower swashplate. Ensure swashplate rests on rigging blocks.

CAUTION

Do not pressurize hydraulic system while any hydraulic system component is disconnected or removed.

9. Pressurize hydraulics per § 12-34 steps 1 thru 3. Position collective stick full down and apply collective stick friction. Turn off hydraulic pump.
10. Adjust each of (3) F121-3 push-pull tube rod ends to lowest/shortest position that allows installing connecting hardware without preload per Figure 5-1, and centered per Figure 5-2. Standard torque per § 20-32 and torque stripe per Figure 5-1.
11. Cut and discard ty-rap securing boot to swashplate.
12. Pressurize hydraulics per § 12-34 steps 1 thru 3. Position collective stick full up and apply collective friction. Turn off hydraulic pump. Verify top of C201-1 ball assembly is flush with top edge of C208-1 tube within 0.030 inch. Adjust push-pull tube rod ends in or out equally to raise or lower swashplate as required.
13. Remove swashplate rigging blocks. Disconnect hydraulic pump per § 12-34.
14. Position boot on swashplate, secure boot with MS3367-6-0 ty-rap, cinch ty-rap until snug without over-tightening, and trim tip flush with head.

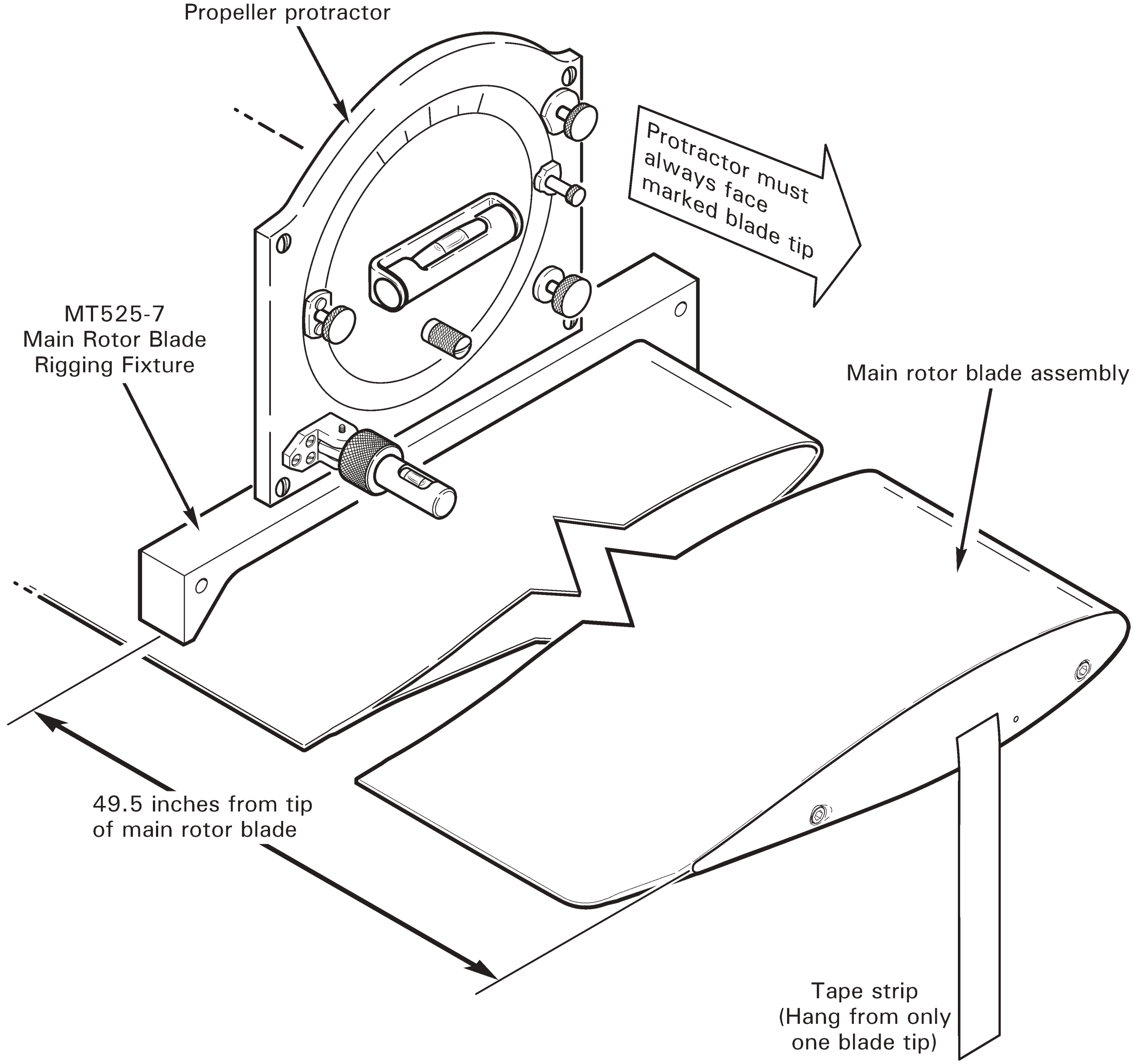

FIGURE 18-10 MAIN ROTOR BLADE RIGGING

18-40 Main Rotor Blade Angle Rigging

A. Procedure

> NOTE
>
> Refer to § 5-33, and Figures 5-1 & 5-2 for standard rod end adjustment procedures. Refer to § 18-13 for main rotor pitch link adjustment procedure.

1. Perform main rotor flight control rigging per § 18-30.
2. Level helicopter laterally and longitudinally via main rotor hub per § 8-12.
3. Adjust rotor track per § 18-40 Part B step 1.
4. Perform collective travel rigging per § 18-41 Parts A and B.
5. Perform cyclic travel rigging per § 18-42 Parts A, B, C, and D.
6. Perform track and balance per § 18-10 as required.

B. Measuring Blade Angles

> NOTE
>
> Hydraulic flight controls must be pressurized while measuring blade angles.

> **CAUTION**
>
> Do not pressurize hydraulic system while any hydraulic system component is disconnected or removed.

> **WARNING**
>
> **Never adjust flight controls while hydraulics are pressurized. Hydraulic forces can cause injury.**

1. Adjust rotor track per the following: Rotate blades so pitch links are aligned with helicopter longitudinal axis. Teeter main rotor hub until blade tips are approximately level. Place a tracking stick at end of one blade and mark stick where blade tip passes. Rotate rotor 180° and mark tracking stick where opposite blade passes. Teeter main rotor hub as required until both blade tips pass tracking stick within 1 inch vertically.
2. Refer to Figure 18-10. Using felt tip marker, mark upper surface of both main rotor blades 49.5 inches inboard of seam between blade tip and tip cover. Lay 1-inch wide length of masking tape chordwise on each blade, centered over marking. Mark each rotor blade with a different designation, such as red and blue.
3. Conspicuously mark one blade tip with tape or cardboard for reference. Zero Kell-Strom KS113 propeller protractor (or equivalent) on top of main rotor hub, parallel to teeter hinge bolt, at location marked “LEVEL HERE”. During zeroing, and when taking blade angle readings, always point protractor face toward marked blade.

18-40 Main Rotor Blade Angle Rigging (continued)

B. Measuring Blade Angles (continued)

4. Position MT525-7 fixture on top of the blade's tape at 49.5 inches, and tight against leading edge. Position protractor on top of fixture, point protractor face toward marked blade, and measure blade angle.

18-41 Collective Travel

> NOTE
>
> Lengthening pitch links increases blade angles.

> NOTE
>
> When making adjustments, keep pitch links as close to neutral (mid-travel) position as possible to preserve the adjustment range for flight checks.

A. Collective Down

1. Refer to Figures 18-7A and 18-8. Install MT759-1 or MT759-2 rigging blocks inside A211-4 cyclic stop. Position collective stick full down and apply friction.
2. Rotate blades so pitch links are aligned with helicopter longitudinal axis.
3. Measure and record blade angles per § 18-40 Part B to determine the values below. Rotate blades 180° and align per step 2 as required.

BLUE BLADE			RED BLADE		
Pitch horn forward		________°	Pitch horn forward		________°
Pitch horn aft	+	________°	Pitch horn aft	+	________°
	=	________°		=	________°
	÷ 2 =	________°		÷ 2 =	________°

4. Blade angles must average between 0.0° and 1.0° for collective down position. (Final blade angle for collective down position is determined during autorotation rpm adjustment.) Adjust main rotor blade pitch links per § 18-13 as required (one full barrel turn = 0.72°) until blade angles, when blades are positioned pitch horn forward, are within 0.2°. Adjust pitch links until blade angles, when blades are positioned pitch horn aft, are also within 0.2°.

> NOTE
>
> After making adjustments, position collective stick full up and apply friction. Verify top of swashplate ball is flush with tube within 0.030 inch per Figure 18-8. Adjust all swashplate push-pull tubes exactly the same amount as required (one full turn = 0.48°). Lengthening all push-pull tubes increases blade angles.

18-41 Collective Travel (continued)

B. Collective Up

1. Refer to Figure 18-7A. Install MT759-1 or MT759-2 rigging blocks inside A211-4 cyclic stop. Position collective stick full up and apply friction.
2. Rotate blades so pitch links are aligned with helicopter longitudinal axis.
3. Measure and record blade angles per § 18-40 Part B to determine the values below. Rotate blades 180° and align per step 2 as required.

BLUE BLADE		**RED BLADE**	
Pitch horn forward	________°	Pitch horn forward	________°
Pitch horn aft	+ ________°	Pitch horn aft	+ ________°
	= ________°		= ________°
	÷ 2 = ________°		÷ 2 = ________°

4. For collective up position, blade angles must average between 12.5° and 13.5° more than collective down position average. Adjust main rotor blade pitch links per § 18-13 as required (one full barrel turn = 0.72°) until blade angles, when blades are positioned pitch horn forward, are within 0.2°. Adjust pitch links until blade angles, when blades are positioned pitch horn aft, are also within 0.2°.

NOTE

Remeasure collective down blade angles after making adjustment for collective up blade angles.

NOTE

After making adjustments, position collective stick full up and apply friction. Verify top of swashplate ball is flush with tube within 0.030 inch per Figure 18-8. Adjust all swashplate push-pull tubes exactly the same amount as required (one full turn = 0.48°). Lengthening all push-pull tubes increases blade angles.

18-42 Cyclic Travel

A. Cyclic Left

1. Position collective stick full down. Position cyclic stick in the longitudinal neutral (mid travel) position, and against left stop. Apply control frictions; sandbag cyclic stick as required.
2. Rotate blades so pitch links are aligned with helicopter lateral axis.
3. Measure and record blade angles per § 18-40 Part B to determine the values below. Rotate blades 180° and align per step 2 as required.

BLUE BLADE			RED BLADE		
Pitch horn right		________°	Pitch horn right		________°
Pitch horn left	+	________°	Pitch horn left	+	________°
	=	________°		=	________°
	÷ 2 =	________°		÷ 2 =	________°

4. Blade angles must average between 7.5° and 8.5° for cyclic left position. Adjust swashplate forward left or right push-pull tube as required (one full turn = 0.6°).

B. Cyclic Right

1. Position collective stick full down. Position cyclic stick in the longitudinal neutral (mid travel) position, and against right stop. Apply control frictions; sandbag cyclic stick as required.
2. Rotate blades so pitch links are aligned with helicopter lateral axis.
3. Measure and record blade angles per § 18-40 Part B to determine the values below. Rotate blades 180° and align per step 2 as required.

BLUE BLADE			RED BLADE		
Pitch horn right		________°	Pitch horn right		________°
Pitch horn left	+	________°	Pitch horn left	+	________°
	=	________°		=	________°
	÷ 2 =	________°		÷ 2 =	________°

4. Refer to Figure 18-7A. Blade angles must average 6.0° minimum for A211-4 Rev P and prior cyclic stops, and 7.0° minimum for A211-4 Rev Q and subsequent cyclic stops. Adjust swashplate forward left or right push-pull tube as required (one full turn = 0.6°).

> NOTE
>
> Remeasure cyclic left blade angles after making adjustment for cyclic right blade angles.

18-42 Cyclic Travel (continued)

C. Cyclic Forward

1. Position collective stick full down. Position cyclic stick in the lateral neutral (5 inches to left of right stop) position, and against forward stop. Apply control frictions; sandbag cyclic stick as required.

2. Rotate blades so pitch links are aligned with helicopter longitudinal axis.

3. Measure and record blade angles per § 18-40 Part B to determine the values below. Rotate blades 180° and align per step 2 as required.

BLUE BLADE		**RED BLADE**	
Pitch horn forward	________°	Pitch horn forward	________°
Pitch horn aft	+ ________°	Pitch horn aft	+ ________°
	= ________°		= ________°
	÷ 2 = ________°		÷ 2 = ________°

4. Blade angles must average between 13.50° and 14.25° for cyclic forward position. Adjust swashplate aft push-pull tube as required (one full turn = 0.44°). A coarse adjustment can be made by adjusting swashplate forward push-pull tubes exactly the same amount (one full turn = 0.6°).

D. Cyclic Aft

1. Position collective stick full down. Position cyclic stick in the lateral neutral (5 inches to left of right stop) position, and against aft stop. Apply control frictions; sandbag cyclic stick as required.

2. Rotate blades so pitch links are aligned with helicopter longitudinal axis.

3. Measure and record blade angles per § 18-40 Part B to determine the values below. Rotate blades 180° and align per step 2 as required.

BLUE BLADE		**RED BLADE**	
Pitch horn forward	________°	Pitch horn forward	________°
Pitch horn aft	+ ________°	Pitch horn aft	+ ________°
	= ________°		= ________°
	÷ 2 = ________°		÷ 2 = ________°

4. Blade angles must average between 13.50° and 14.25° for cyclic aft position. Adjust swashplate aft push-pull tube as required (one full turn = 0.44°). A coarse adjustment can be made by adjusting swashplate forward push-pull tubes exactly the same amount (one full turn = 0.6°).

> NOTE
>
> Remeasure cyclic forward blade angles after making adjustment for cyclic aft blade angles.

18-50 Tail Rotor Flight Control Rigging

Refer to R66 Illustrated Parts Catalog (IPC) Figures 67-29 thru 67-39.

18-51 Pedals

1. Refer to Figure 67-4. Insert a 3/16-inch diameter rigging pin through the hole in the right-hand keel panel and the rigging pin holes in the C317-7 bellcrank.
2. Adjust the F121-9 push-pull tube as required to obtain a dimension of 5.24 ± 0.03 in. from the lower forward NAS6604-9 bolt in C317-5 or C317-9 bellcrank and horizontal pedal torque tube.

18-52 Forward Bellcrank

Remove the rigging pin and place the left pedal against its stop. Adjust the F121-11 push-pull tube to obtain 1.08 - 1.18 inches between the end of the rod end and the bulkhead.

18-53 Intermediate Bellcrank

With left pedal at stop, adjust the C121-17 push-pull tube length as required to obtain 0.35 ± 0.03 inch between two faces of pitch control assembly and the housing.

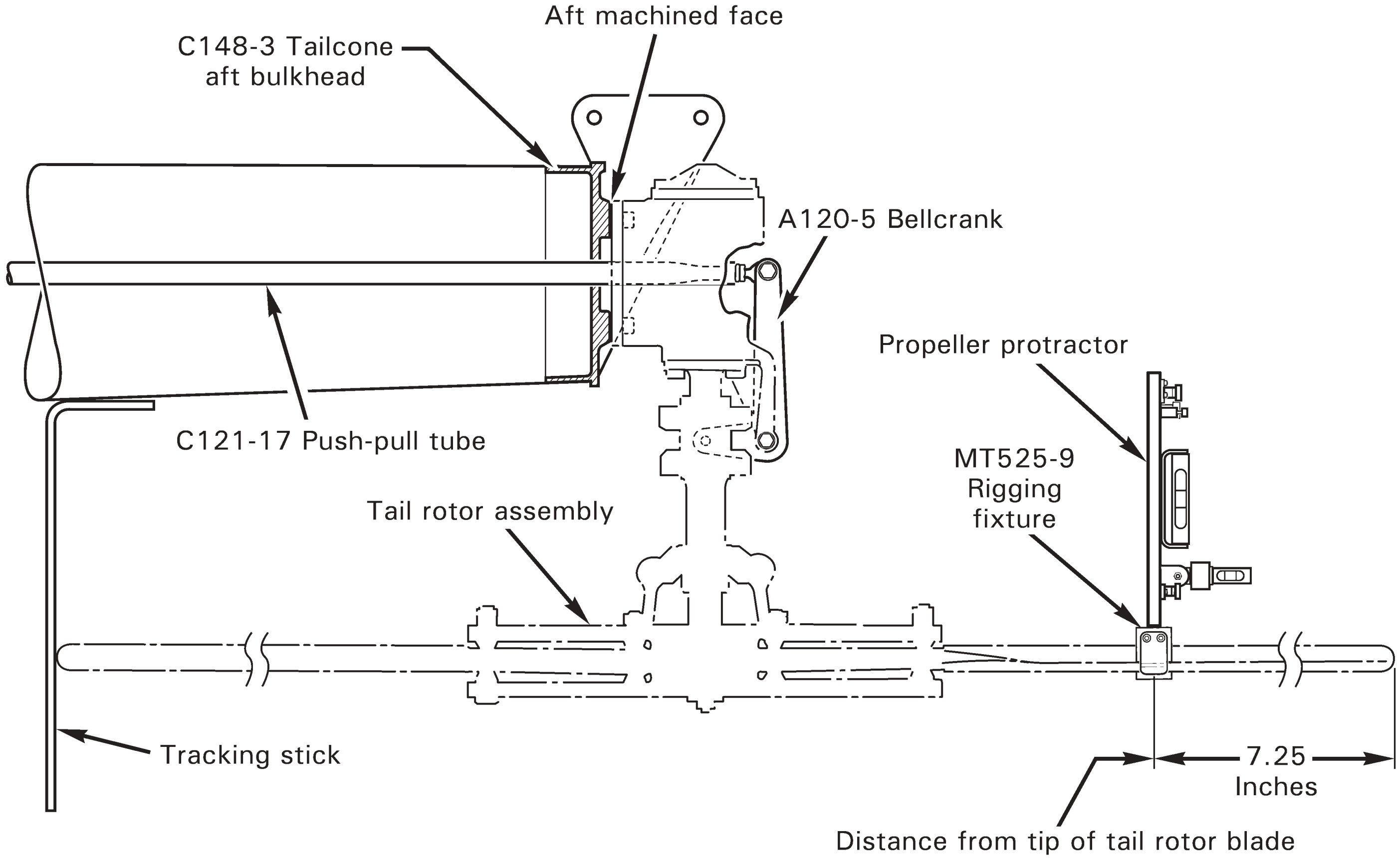

FIGURE 18-11 TAIL ROTOR BLADE RIGGING

18-60 Tail Rotor Blade Rigging

1. Level helicopter laterally, and longitudinally via main rotor hub, per § 8-12.
2. Place left (or right) pedal against its stop. Position tail rotor blades parallel with tailcone axis.
3. Refer to Figure 18-11. Tape a tracking stick to tailcone at blade tip. A tracking stick can be made using a 1″ x 12″ strip of aluminum with a 90° bend 2 inches from one end.
4. Rotate tail rotor shaft weldment and mark tracking stick where each blade tip drain hole passes. Adjust (teeter) tail rotor hub on output shaft until both blade tips pass the same point on the tracking stick.
5. Using felt tip marker, mark inboard surface of both tail rotor blades 7.25 inches from each blade tip. Lay 1-inch wide strip of masking tape chordwise on each blade, centered over marking. Mark each blade with a different color designation, such as red or blue.
6. Have a second person hold one blade tip at left pedal track mark with left pedal against its stop. Position MT525-9 rigging fixture on aft blade, against inboard surface. Position propeller protractor against fixture, measure blade angle, and record data below. Rotate tail rotor 180°, and record opposite blade angle.

		Pedals Full Left	
Blue Blade		________°	
Red Blade	+	________°	
	=	________°	
	÷ 2 =	________°	(18.5/19.0° required)

7. Difference between blue and red blade angles may not exceed 0.4°. If blade angles exceed this limit, remove tail rotor assembly per § 64-10, rotate assembly one-half revolution, and install assembly per § 64-10. Repeat previous steps. If blade angles still exceed relative limit, contact RHC Technical Support for replacement blade assistance.
8. Adjust C121-17 push-pull tube rod ends per § 5-33 and Figures 5-1 & 5-2 as required to obtain blade angle between 18.5° and 19.0°. One full turn of the rod end will change the blade angle 0.33°.
9. Have a second person hold one blade tip at right pedal track mark with right pedal against its stop. Position MT525-9 rigging fixture on aft blade, against inboard surface. Position propeller protractor against fixture, measure blade angle, and record data below. Rotate tail rotor 180°, and record opposite blade angle.

		Pedals Full Right	
Blue Blade		________°	
Red Blade	+	________°	
	=	________°	
	÷ 2 =	________°	(15.5/16.5° required)

10. Adjust C121-17 push-pull tube rod ends per § 5-33 and Figures 5-1 & 5-2 as required to obtain blade angle between 15.5° and 16.5°. If adjusted, recheck left pedal blade angles per previous steps.

18-60 Tail Rotor Blade Rigging (continued)

11. If the blade angle range for left and right pedal settings cannot be obtained using the preceding steps, pedal total travel is either too great or too small. Use the following procedure to check and adjust pedal travel:

    a. Add right and left pedal blade angles together. If total is less than 34.0°, pedal total travel is too small. If total is greater than 35.5°, pedal total travel is too great.

    b. If pedal total travel is too small, increase C343-11 push-pull tube length and/or decrease C343-13 push-pull tube length.

    c. If pedal total travel is too great, decrease C343-11 push-pull tube length and/or increase C343-13 push-pull tube length.

    d. Recheck left and right pedal blade angles per previous steps.

12. Balance tail rotor per § 18-20.

Intentionally Blank

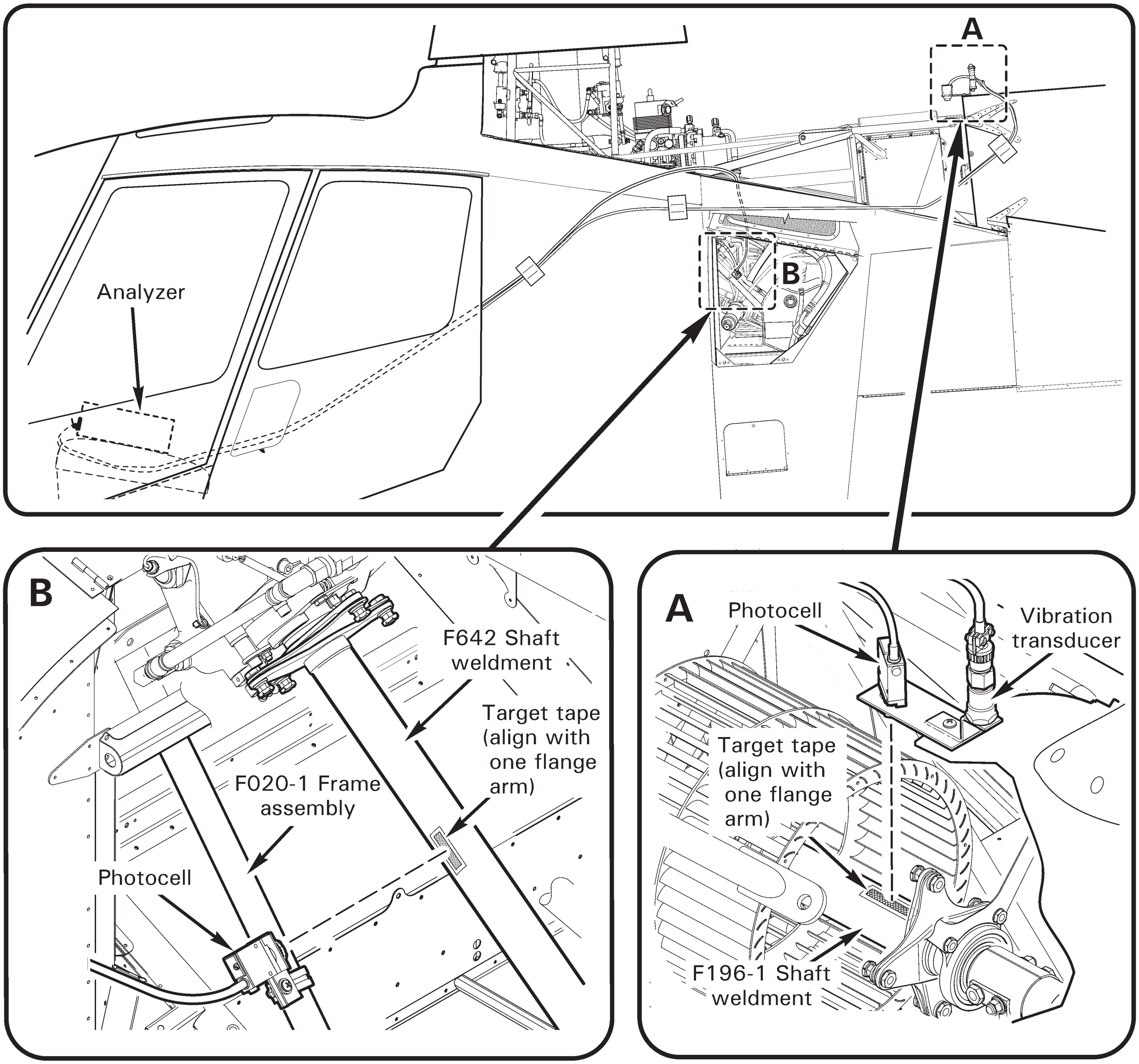

FIGURE 18-12 FAN SHAFT AND ENGINE SHAFT BALANCING

18-70 Fan Shaft and Engine Shaft Balancing

NOTE

Calibrate track and balance equipment per manufacturer's recommendation, at least once a year, or if equipment is dropped, misused, or calibration is suspect.

NOTE

The Chadwick-Helmuth Vibrex system, the TEC ACES system, the Dynamic Solutions Systems' MicroVib system, or equivalent equipment is required to perform dynamic rotor balancing and in-flight track checks.

18-71 Preparing Helicopter for Fan Shaft and Engine Shaft Balancing

NOTE

Use the following balance procedures in conjunction with approved equipment manufacturer's balancing instructions.

1. Remove tailcone cowling per § 53-23. Clean F196-1 fan shaft weldment, G174-1 fanwheel assembly, and F642 shaft weldment. Inspect condition of flex plates, weldment flanges, and adjacent yokes. Verify proper fastener installation and unbroken torque stripe.
2. Refer to Figure 18-12.
   a. Fan Shaft: Using a #8 screw, attach vibration transducer and photocell (cables pointed up) to mounting bracket(s). Secure bracket(s) to top of tailcone at the forward nutplate, aiming photocell toward center of shaft.
   b. Engine Shaft: Using appropriate hardware, attach photocell (cable pointed outboard toward access door) to mounting bracket. Secure bracket to F020-1 frame assembly using MS21919WDG16 clamp and associated hardware, aiming photocell toward center of shaft.
3. Install a target tape on each shaft weldment and align tape with a flange arm. Verify photocell beam will hit target tape. (Tape becomes the 12 o'clock position.)
4. Route cable(s) forward into cabin; secure cables to cabin with duct tape.
5. Connect cable(s) to balancer. Verify security of installation.

FAN SHAFT

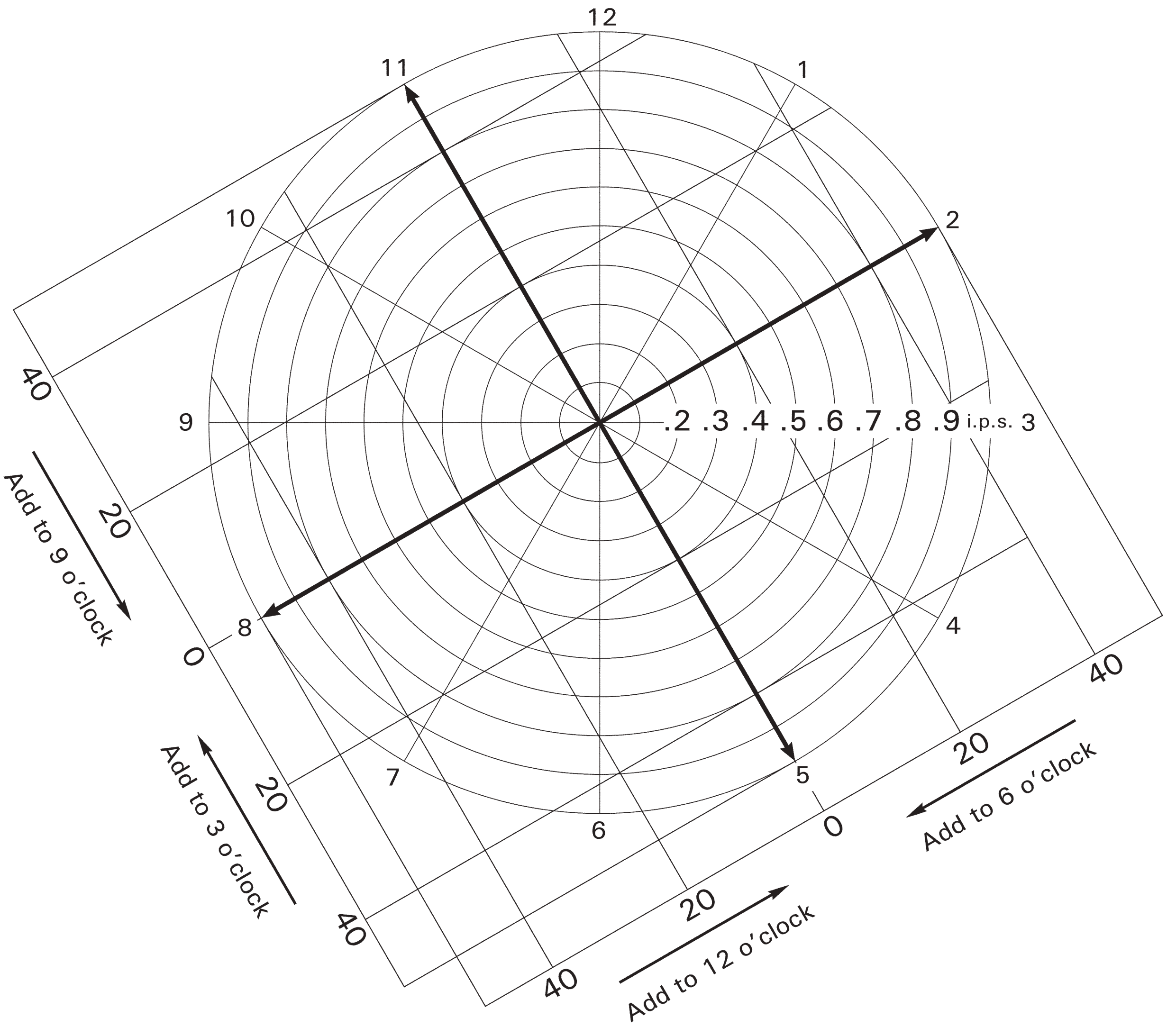

- Chart Sensitivity = .017 ips/gram
- Graduations shown at 0, 20, and 40 are in grams.
- Clock angles are to be counted in a clockwise rotation, looking forward.

FIGURE 18-13 FAN SHAFT BALANCING CHART

18-72 Ground Checks

A. Balancing Procedure

> NOTE
>
> Run-up and shutdown helicopter throughout procedure as required per R66 Pilot's Operating Handbook (POH) Section 4.

> NOTE
>
> Use the following balancing procedures in conjunction with approved equipment manufacturer's balancing instructions.

> **WARNING**
>
> **Fan shaft and engine shaft balancing equipment must be removed for flight.**

1. Prepare helicopter for fan shaft and engine shaft balance per § 18-71.
2. Configure balance equipment per manufacturer's instructions.
3. Ground run helicopter at 100% RPM (2114 fan shaft RPM and 6016 engine shaft RPM). Verify cyclic stick and tail rotor pedals are in neutral position.
4. Determine vibration level per balance equipment manufacturer's instructions. Maximum vibration allowance is 0.2 IPS (inches per second). If reading is over 0.2 IPS, adjust balance per Part B. Repeat Part A steps 3 and 4 as required until balance is within limits.
5. Remove balance equipment. Standard torque fasteners per § 20-32 and torque stripe per Figure 5-1.
6. Install tailcone cowling per § 53-23.

ENGINE SHAFT

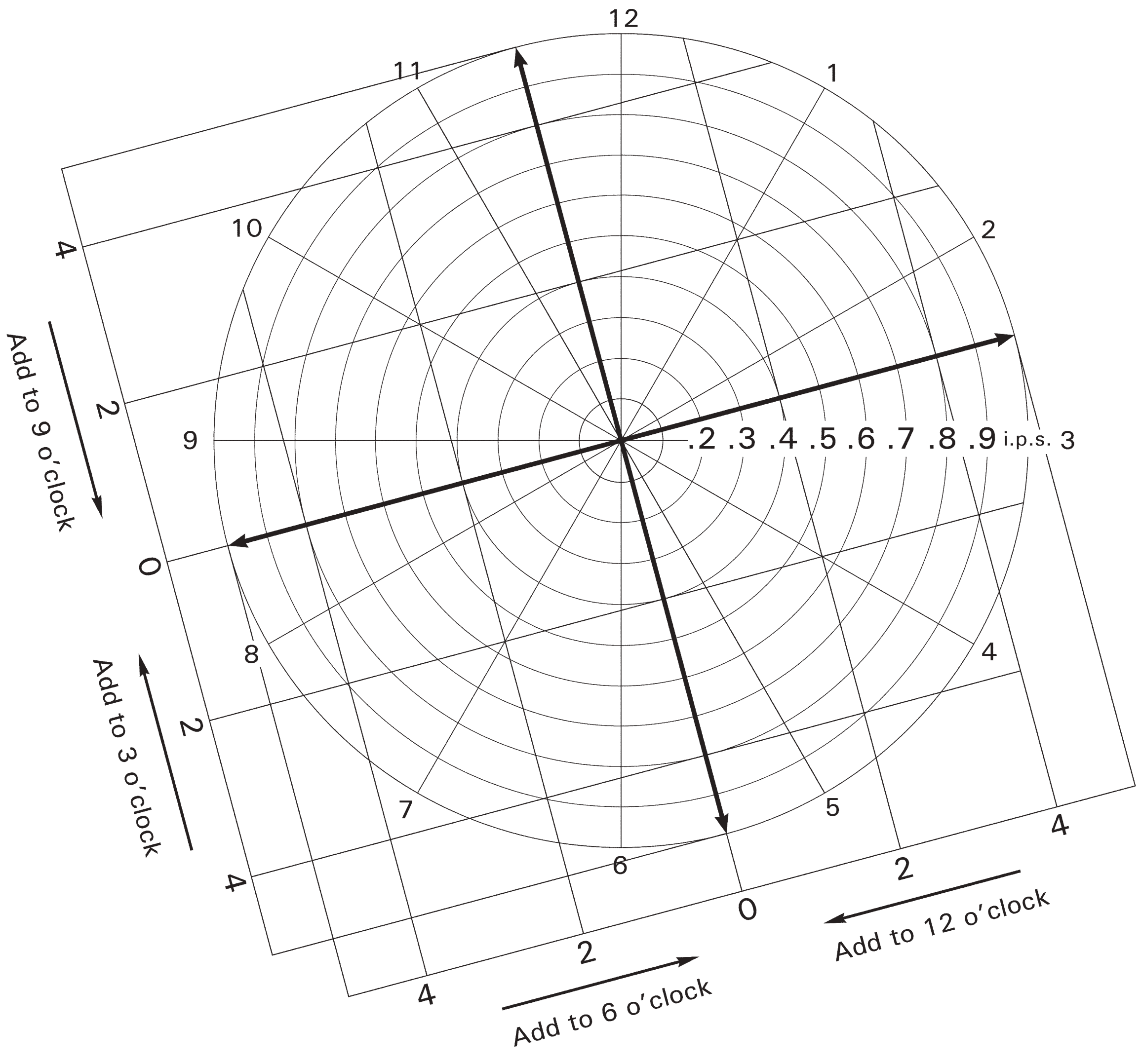

- Chart Sensitivity =.20 ips/gram
- Graduations shown at 0, 2, and 4 are in grams.
- Clock angles are to be counted in a clockwise rotation, looking forward.

FIGURE 18-14 ENGINE SHAFT BALANCING CHART

18-72 Ground Checks (continued)

B. Balance Adjustments

1. Fan Shaft: Refer to Figure 18-13. Adjust balance by selecting one or more NAS1149D0463J, NAS1149F0432P, NAS1149F0463P, A214-3, or A141-14 washers as required and install under one nut of intermediate flex plate (tail rotor driveline) fastener. Standard torque fasteners per § 20-32, but do not torque stripe.

> NOTE
>
> If a large diameter washer is installed at a shaft flange, also install one NAS1149F0432P washer against flange to provide clearance between flange & edge of large diameter washer (not required for flat flange). Additionally, an NAS6604-5, -6, -7, or -8 bolt may be used as a flex plate fastener to accommodate balance washers; verify thread engagement meets torque requirements per § 20-30.

2. Engine Shaft: Refer to Figure 18-14. Adjust balance by selecting one or more NAS1149D0463J, NAS1149F0432P, NAS1149F0463P, A214-3, or A141-14 washers as required and install under one nut of aft flex plate (engine driveline) fastener. After first adjustment, if engine shaft does not respond correctly to balance weight, verify runout of F018 clutch housing's largest diameter; radial runout must not exceed 0.005 inch TIR (rotate TR backwards by hand to rotate clutch housing) before making further weight changes. If runout exceeds TIR limit, contact RHC Technical Support. Standard torque fasteners per § 20-32, but do not torque stripe.

> NOTE
>
> If a large diameter washer is installed at a shaft flange, also install one NAS1149F0432P washer against flange to provide clearance between flange & edge of large diameter washer (not required for flat flange). Additionally, an NAS6604-5, -6, -7, or -8 bolt may be used as a flex plate fastener to accommodate balance washers; verify thread engagement meets torque requirements per § 20-30.

> NOTE
>
> Large diameter balance washer(s) used to balance F642 engine shaft can sometimes cause a "humming" sound at 100% RPM. If hum is encountered, disconnect shaft at engine flex plate, rotate shaft 180 degrees, then reconnect shaft & secure to flex plate without large diameter washer(s) before resuming balancing.

Intentionally Blank

CHAPTER 20

STANDARD PRACTICES

Section	Title	Page
20-10	Cleaning	20.1
20-20	Lubrication	20.2A
20-30	Torque Requirements	20.3
20-31	Torque Stripe	20.5
20-32	Standard Torques	20.6
20-33	Special Torques	20.7
20-34	Push-Pull Tube Rod End Adjustment	20.11B
20-35	D210-series Nuts on Critical Fasteners	20.11B
20-36	A880 Flared Tube Components	20.11C
20-40	Non-Destructive Testing	20.12
20-41	Magnetic Particle Inspection	20.12
20-42	Fluorescent Penetrant Inspection	20.13
20-50	Corrosion Control	20.13
20-51	Conversion Coat – Aluminum	20.13
20-60	Priming and Painting	20.14
20-70	Approved Materials	20.16
20-71	Paint Strippers	20.16
20-72	Solvents and Cleaners	20.16
20-73	Fillers and Putty	20.17
20-74	Torque Seal	20.17
20-75	Primers	20.18
20-76	Powder Coat	20.18A
20-77	Paints	20.18B
20-78	Lubricants	20.21
20-79	Adhesives and Sealants	20.22
20-80	Storage Limits	20.24
20-90	Miscellaneous Practices	20.25
20-91	Part Interchangeability	20.25
20-92	Thermal Fitting Parts	20.25
20-93	Replacement Component Identification (Data) Plates	20.25
20-94	Crimp Inspection	20.26

Intentionally Blank

CHAPTER 20

STANDARD PRACTICES

20-10 Cleaning

WARNING

Review appropriate Safety Data Sheet (SDS) when working in proximity to hazardous materials. Specific recommendations for use of personal protective equipment are located in the SDS.

A. Cleaning Exterior Surfaces

NOTE

Remove turbine exhaust stains from engine cowling, tailcone, empennage, and tail rotor blades after every flight to prevent permanent discoloration.

CAUTION

Refer to § 20-10 Part B for cleaning windshield and windows.

CAUTION

Never use high-pressure spray to clean helicopter. Never blow compressed air into main or tail rotor blade tip drain holes, pitot tube, or static ports.

CAUTION

Wash helicopter exterior surfaces with mild soap (pH between 7 & 9) and water. Harsh abrasives, alkaline soaps, or detergents can scratch painted or plastic surfaces, or cause corrosion of metal. Protect areas where cleaning solution could cause damage.

1. Rinse away loose dirt and debris from exterior surface with clean water.
2. Apply mild soap (pH between 7 & 9) and clean warm water solution to exterior surface using a clean, soft cloth, sponge, or soft bristle brush. Use caution near antennas and sensitive equipment.
3. Remove oil and grease using a cloth wetted with aliphatic naphtha.
4. Rinse all surfaces thoroughly.
5. If desired, polish painted surfaces with a good quality automotive wax using soft cleaning cloths, or a chamois cloth, free of abrasive debris.

20-10 Cleaning (continued)

B. Cleaning Windshield and Windows

1. Remove dirt, mud, and other loose particles from exterior surfaces with clean water.
2. Wash with mild soap (pH between 7 & 9) and warm water or with aircraft plastic cleaner. Use a soft cloth or sponge in a straight back and forth motion. Do not rub harshly.
3. Remove oil and grease with a cloth moistened with isopropyl alcohol (rubbing alcohol) or aliphatic naphtha.

CAUTION

Do not use gasoline, other alcohols, benzene, carbon tetrachloride, thinner, acetone, or window (glass) cleaning sprays.

4. After cleaning plastic surfaces, apply a thin coat of hard polishing wax. Rub lightly with a soft cloth. Do not use a circular motion.

CAUTION

Windshield surface must be water-repellent for good visibility in rain. When using a new cleaning or polishing product on windshield, verify water beads on surface before flying.

5. On acrylic windows (standard windshield), scratches can be removed by rubbing with jeweler's rouge followed by hand polishing with commercial plastic polish. Use a figure eight motion with polishing.

NOTE

Impact-resistant windshields are made from polycarbonate with a protective hardcoat and cannot be polished.

C. Cleaning Seat Assemblies and Back Rests

1. Vacuum and brush, then wipe with damp cloth. Dry immediately.
2. Soiled upholstery, except leather, may be cleaned with a good upholstery cleaner suitable for the material. Follow manufacturer's instructions. Avoid soaking or harsh rubbing.
3. Leather should be cleaned with saddle soap or a mild hard soap and water.

D. Cleaning Carpet

Remove loose dirt with a whisk broom or vacuum. For soiled spots and stains, use nonflammable dry cleaning liquid.

20-10 Cleaning (continued)

E. Cleaning or Rinsing RR300 Engine

Follow published Rolls-Royce guidance (subject to revision) to maximize RR300 engine corrosion prevention:

- RR300 Operation and Maintenance Manual (OMM) Task 05-50-00-100-801, Clean the Engine after Operation in a Corrosive Environment, and
- NTO (Notice To Operators) No. RR300-020, RR300 Engine Wash Procedures.

Refer to § 12-71 for drainage spotface inspection during cleaning or rinsing of RR300 engine.

20-20 Lubrication

WARNING

Review appropriate Safety Data Sheet (SDS) when working in proximity to hazardous materials. Specific recommendations for use of personal protective equipment are located in the SDS.

All R66 bearings are sealed or self-lubricating and do not require periodic lubrication.

The engine oil tank, the main and tail rotor gearboxes, and the hydraulic reservoir require servicing when indicated by sight gage level. Additionally, change engine, gearbox, or hydraulic oil and clean respective sight gage when oil becomes so dirty its level cannot be determined. Change hydraulic oil if notedly odorous.

When installing a new or overhauled main rotor gearbox, replace filter at first 100-hour inspection after installation. Thereafter, replace filter at scheduled intervals per § 1-90. When installing a new or overhauled tail rotor gearbox, drain and flush after first 4 hours of flight or first chip light, whichever occurs first. Thereafter, drain and flush gearbox at scheduled intervals per § 1-90.

Servicing procedures are located in Chapter 12.

Intentionally Blank

20-30 Torque Requirements

A. Tool Calibration

Dimensions and tolerances given in this manual are critical. Calibrate measuring tools per manufacturers recommendation at least once a year, when tool is dropped, misused, or calibration is suspect. This includes torque wrenches, micrometers, calipers, dial indicators, and spring scales.

WARNING

Proper torque is critical. Always use calibrated wrenches and undamaged, properly lubricated (where applicable) hardware. Ensure clamping surfaces are clean, and clamp only bare metal or wet-primed surfaces. Improper torque or dirty or painted clamping surfaces may result in loss of clamp-up, hardware or part damage, and premature failure.

B. Torque Value

Torque fasteners to standard dry values listed in § 20-32 unless otherwise specified. If torque is applied by rotating bolt, increase torque value by 10% to account for higher friction at bolt head and shank.

For example, the torque wrench setting for an NAS1305 bolt used with a NAS1068 nutplate is determined as follows:

NAS1305 bolt (5 indicates 5/16 inch size) dry torque per § 20-32	240 in.-lb
Add 10% because torque must be applied at bolt head	+ 24 in.-lb
Torque wrench setting	264 in.-lb

C. Secondary Locking Mechanism

A secondary locking mechanism is required on all critical fasteners. B330 stamped nuts (palnuts) serve as secondary locking mechanisms in most areas on the helicopter, and are torqued per § 20-32. The R66 Illustrated Parts Catalog (IPC) lists secondary locking mechanisms for specific fasteners.

D. Critical Fastener

A critical fastener is one which, if removed or lost, would jeopardize safe operation of the helicopter. This includes joints in the primary control system, and non-fail-safe structural joints in the airframe, landing gear, and drive system.

WARNING

Assembly of flight controls is critical and requires inspection by a qualified person. If a second person is not available, RHC recommends the installer take a 5-minute break prior to inspecting flight control connections the installer has assembled.

Given	**Symbols**
Y = Unknown	Y = Torque wrench setting
T = 135 in.-lb	T = Torque applied to fastener
L = 10 in.	L = Length of torque wrench
A = 1.5 in.	A = Length of adapter

When using an adapter that lengthens torque wrench effective length, calculate torque wrench setting using the formula below:

EXAMPLE

$$\textbf{Solve for Y} = \frac{T \times L}{L + A} = \frac{135 \times 10}{10 + 1.5} = \frac{1350}{11.5} = 117.39$$

Set torque wrench to 117 in.-lb to torque fastener to 135 in.-lb.

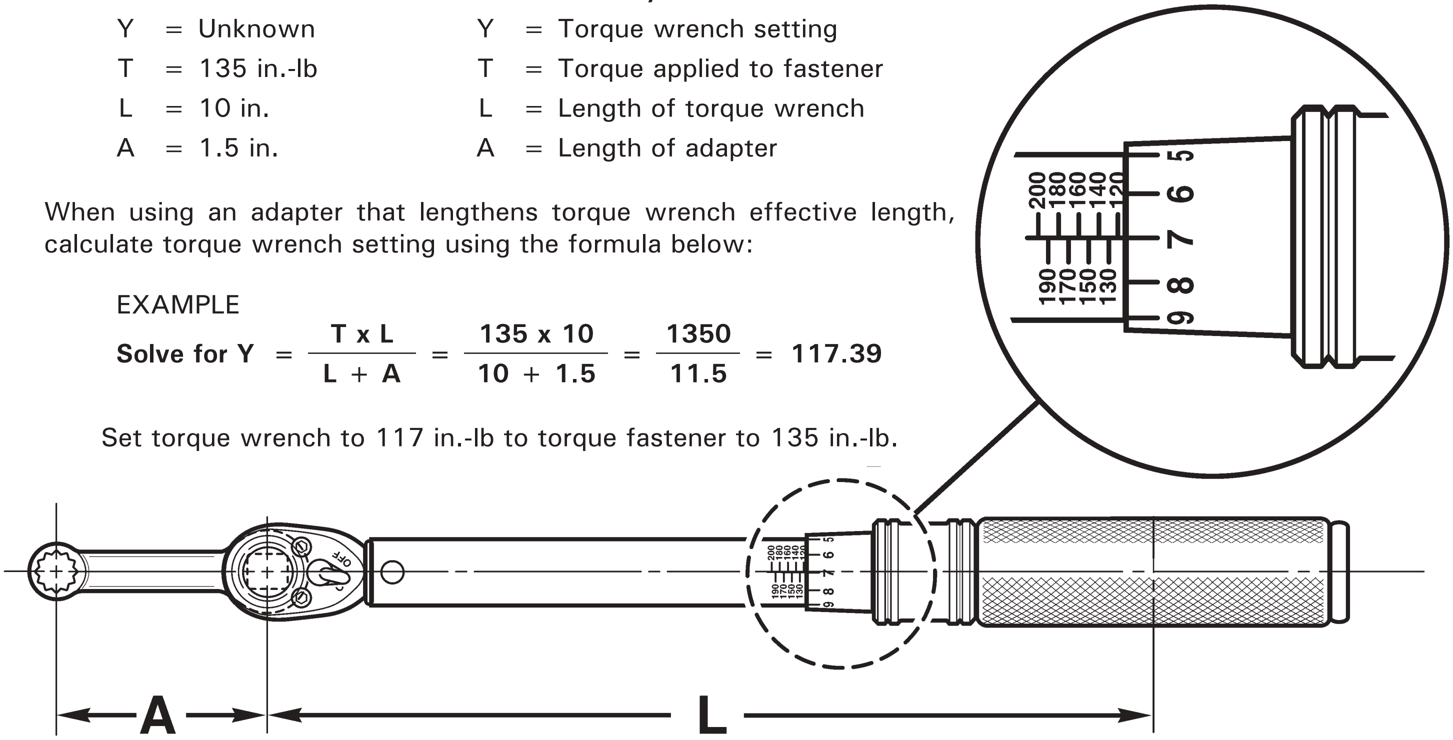

FIGURE 20-1 LENGTHENING TORQUE WRENCH EFFECTIVE LENGTH

Given	**Symbols**
Y = Unknown	Y = Torque wrench setting
T = 135 in.-lb	T = Torque applied to fastener
L = 10 in.	L = Length of torque wrench
A = 1.5 in.	A = Length of adapter

When using an adapter that shortens the torque wrench effective length, calculate torque wrench setting using the formula below:

EXAMPLE

$$\textbf{Solve for Y} = \frac{T \times L}{L - A} = \frac{135 \times 10}{10 - 1.5} = \frac{1350}{8.5} = 158.82$$

Set torque wrench to 159 in.-lb to torque fastener to 135 in.-lb.

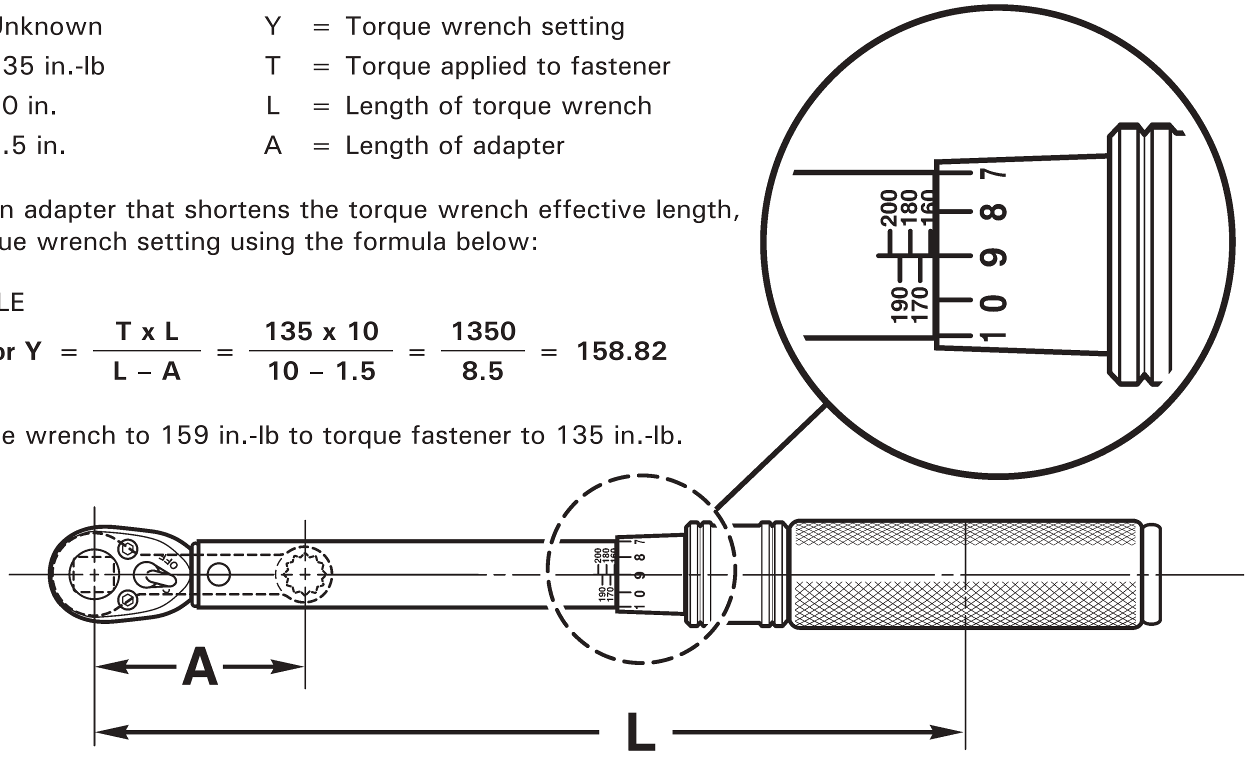

FIGURE 20-2 SHORTENING TORQUE WRENCH EFFECTIVE LENGTH

20-30 Torque Requirements (continued)

E. Torque Requirements

CAUTION
Never substitute AN bolts for NAS bolts. NAS bolts have higher tensile strength.

1. Any self-locking nut whose drag has deteriorated appreciably must be replaced. Damaged hardware must be replaced.
2. Bolt and nut are to be clean and dry except when assembly procedure specifies anti-seize or thread-locking compound.
3. If chattering or jerking occurs, disassemble and re-torque fastener.
4. If special adapters which change effective length of torque wrench are used, final torque value must be calculated using formulas in Figures 20-1 and 20-2.
5. Unless otherwise specified, proper thread engagement requires:
   a. If palnut is not required, one to four threads exposed beyond primary nut.
   b. If palnut is required, two to four threads exposed beyond primary nut.
   c. For B526-8 screws, one to five threads exposed beyond primary nut.

WARNING
Proper thread engagement ensures proper locking of fastener. Exceeding maximum thread exposure beyond primary nut may allow nut to seat against unthreaded shank, resulting in insufficient joint clamping.

6. Refer to Part A. Torque wrenches must be calibrated annually, when dropped, or when a calibration error is suspected.

20-31 Torque Stripe

WARNING
Refer to Safety Data Sheet (SDS) and observe precautions when working in proximity to hazardous materials.

Refer to Figure 5-1. Apply lacquer-paint Torque Seal® to all critical fasteners after palnut installation in a stripe ("torque stripe") extending from the fastener's exposed threads across both nuts and onto the component. Subsequent rotation of the nut or bolt can be detected visually. Position torque stripes for maximum visibility during preflight inspections. Approved Torque Seal® is listed in § 20-74.

If, during inspection, the remaining torque stripe on a fastener is insufficient to determine joint integrity, then remove accompanying palnut as required and apply specified torque to fastener. If fastener moves, disassemble joint and inspect parts for damage such as fretting, thread deformation, hole elongation, etc.; replace damaged parts. If fastener does not move, install new palnut as required & standard torque per § 20-32. Torque stripe fastener per Figure 5-1.

20-32 Standard Torques

NOTE

1. Torque values are in inch-pounds unless otherwise specified.
2. Torque values include nut self-locking torque.
3. Increase torque values 10% if torqued at bolt head.
4. Wet indicates threads lubricated with A257-9 anti-seize.
5. For elbow and tee fittings which require alignment, torque to indicated value, then tighten to desired position.
6. Tolerance is ± 10% unless range is specified.
7. Unless otherwise specified, thread sizes 8-32 and smaller are not used for primary structure and do not require control of torques.

FASTENER SERIES		SIZE	EXAMPLE FASTENER	TORQUE (IN.-LB)
NAS6603 thru NAS6608 Bolts NAS1303 thru NAS1308 Bolts NAS623 Screws NAS1351 & NAS1352 Screws NAS600 thru NAS606 Screws		10-32	NAS6603	50
		1/4-28	NAS6604	120
		5/16-24	NAS6605	240
		3/8-24	NAS6606	350
		7/16-20	NAS6607	665
		1/2-20	NAS6608	995
A142 screws AN3 Bolts AN4 Bolts AN6 Bolts AN8 Bolts	AN502 Screws AN503 Screws AN509 Screws AN525 Screws MS24694 Screws MS27039 Screws	10-32	A142-1, -3, -4; AN3	37
		1/4-28	AN4	90
		3/8-24	AN6	280
		1/2-20	AN8	795
STAMPED NUTS (PALNUTS) Palnuts are to be used only once and replaced with new when removed.		10-32	B330-7 (MS27151-7)	6–15
		1/4-28	B330-13 (MS27151-13)	11–25
		5/16-24	B330-16 (MS27151-16)	20–40
		3/8-24	B330-19 (MS27151-19)	29–60
		7/16-20	B330-21 (MS27151-21)	42–85
		1/2-20	B330-24 (MS27151-24)	54–110
TAPERED PIPE THREADS		1/8-27	See note 5	60
			Straight fittings only	120
		1/4-18	See note 5	85
			Straight fittings only	170
		3/8-18	See note 5	110
			Straight fittings only	220
		1/2-14	See note 5	160
			Straight fittings only	320
		3/4-14	See note 5	230
			Straight fittings only	460
ROD END JAM NUTS (AN315 and AN316)		10-32	AN315-3	15
		1/4-28	AN316-4	40
		5/16-24	AN316-5	80
		3/8-24	AN316-6	110

20-33 Special Torques

Special torques supersede standard torques listed in § 20-32.

NOTE

1. Torque values are in inch-pounds unless otherwise specified.
2. Torque values include nut self-locking torque.
3. Increase torque values 10% if torqued at bolt head.
4. Wet indicates threads lubricated with A257-9 anti-seize.
5. For elbow and tee fittings which require alignment, torque to indicated value, then tighten to desired position.
6. Tolerance is ± 10% unless range is specified.
7. Unless otherwise specified, thread sizes 8-32 and smaller are not used for primary structure and do not require control of torques.

AREA	FASTENER	TORQUE (IN.-LB)
AIR CONDITIONING (OPTIONAL EQUIPMENT)	(1) D795-8 line assembly, B-nuts	150
	(1) D799-2 switch assembly	90
	(1) D799-3 switch assembly	90
	(1) D799-9 switch assembly	90
	(1) G783 condenser, dessicant cap	100
	(1) G784-1 evaporator assembly, inlet B-nut to TXV	210
	(1) G794-1 hose assembly, B-nuts	210
	(1) G794-2 hose assembly, B-nuts	210
	(1) G794-3 hose assembly, B-nuts	150
	(1) G810-1 line assembly, B-nuts	210
	(1) G811-1 line assembly, B-nuts	150
	(2) AN924-8D nuts	360
	(8) MS27039C1-07 screws at condenser fans	20
	(2) 91292A135 screws (apply one drop B270-20 adhesive to threads)	70
COOLING SYSTEM (ENGINE AND MAIN ROTOR GEARBOX OILS)	(1) B289-2 bolt, drain	70
	(1) B563-2 sight gage	150
	(1) D205-19 hose assembly, B-nuts	200
	(1) D205-20 hose assembly, B-nuts	200
	(1) F723-1 line assembly, B-nuts	675
	(1) F723-2 line assembly, B-nuts	245
	(1) F723-3 line assembly, B-nuts	245
	(1) F723-4 line assembly, B-nuts	245
	(1) F724-1 line assembly, B-nuts	120
	(1) F724-2 line assembly, B-nuts	285
	(1) F724-3 line assembly, B-nuts	285
	(2) AN815-8D unions, on F649-1 oil cooler	300
	(2) AN832-8D unions, at firewall	230-260

20-33 Special Torques (continued)

AREA	FASTENER	TORQUE (IN.-LB)
COOLING SYSTEM (ENGINE & MAIN GEARBOX OILS) (Cont'd)	(1) AN832-10D union, at firewall	330-360
	(2) AN924-8D nuts, at firewall	150
	(1) AN924-10D nut, at firewall	180
	(2) AN924-6D nuts, securing F823-1 thermostat assembly to firewall	120
	(2) AS5169D04L fitting, on F649-1 oil cooler	58
	(1) MS28034-1 oil temperature sender, to tank	120
DOOR HINGES AND GAS SPRINGS	(16) MS51861-37C screws, securing door hinge assemblies	36
	(2) 21FKF-518 (or 94830A030) nuts, securing G904-1 gas spring ball studs at baggage compartment door	100
	(2) 21FKF-518 (or 94830A030) nuts, securing D575-1 gas spring ball studs at aft doors	100
	(2) C394-2 ball stud, at forward doors, to frame (B270-10 on thds)	150
	(2) D575-2 and (2) D575-3 ball joints, at forward doors' D573-4 rods	37
DRIVE SYSTEM	(2) F650-1 bolt, forward main rotor gearbox and G201 frame mounts	50 FT-LB, wet Bolt head or nut
	(2) F650-2 bolt, aft main rotor gearbox and G201 frame mounts	50 FT-LB, wet Bolt head or nut
ELECTRICAL SYSTEM	(2) MS21044B5 nut, securing A780 cable to B415-2 relay	80
	(1) NAS6605-3 bolt, securing B237-8 battery ground cable to G131-5 terminal assembly	70
EMPENNAGE	(8) NAS6604-6 bolts, securing vertical stabilizers to upper horizontal stabilizer	185
	(1) NAS1352-3-14P screw, securing guard assembly blocks to lower vertical stabilizer	40
	(2) AN814-10D plugs (upper weight only)	100
ENGINE CONTROLS	(1) Fuel control unit (FCU) lever nut	40-50
	(1) Power turbine governor (PTG) lever nut	40-60
	(4) MS21042L3 nut, securing control wires	25-30
ENGINE INDUCTION	(1) A457-16 fitting, IBF filter FMA line	20
	(1) A457-17 fitting, IBF filter FMA line	60
	(1) A457-18 fitting, IBF filter FMA line	3
	(1) G738-1 nozzle, compressor service	30
	(1) AN316-7R nut, compressor service line	150
	(1) AN929-4 cap, compressor service line	60
FUEL SYSTEM	(1) A761-2 valve, sump (B270-6 sealant on threads)	60
	(1) B254-3 strainer, fuel bladder outlet	150
	(1) B283-12 hose assembly, fuel valve to fuel pump inlet, B-nuts	110-130
	(5) B289 bolts, fuel sender	37
	(1) F550 fuel sender center stud nut	11
	(1) B330-6 palnut at fuel sender center stud	9

20-33 Special Torques (continued)

AREA	FASTENER	TORQUE (IN.-LB)
FUEL SYSTEM (Cont'd)	(1) F550 fuel sender ground stud nut	9
	(1) B330-5 palnut at fuel sender ground stud	9
	(1) D205-21 hose assembly, fuel bladder outlet to fuel valve, B-nuts	110-130
	(1) G254-8 (or G254-2) fitting, vent assembly	200
	(1) G254-6 retainer, vent assembly	200
	(1) A880-1005 or AN924-5D nut, low fuel warning switch assembly	150
	(1) D210-3 nut, securing control wire	27
AUXILIARY FUEL SYSTEM	(5) B289-4 bolts, fuel sender	37
	(1) D205-35 hose assembly, nuts (large tank; drain)	120
	(2) D205-36 hose assembly, nuts	120
	(1) D205-37 hose assembly, nuts (small tank; drain)	120
	(1) A761-2 valve (B270-6 sealant on threads)	60
	(2) G764-5 fittings	200
	(1) G768-11 sensor assembly	Finger tighten only
	(1) G768-3 sensor assembly	85
	(1) F550 fuel sender center stud nut	11
	(1) B330-6 palnut at fuel sender center stud	9
	(1) F550 fuel sender ground stud nut	9
	(1) B330-5 palnut at fuel sender ground stud	9
	(2) AN806-6D plugs (when tank assembly removed)	120
	(4) 90825A146 screw	10
	(2) A880-906 or AN815-6D fitting	200
PRESSURE FUELING SYSTEM	(1) A880-1005 nut, A521-6 low fuel switch assy (single)	150
	(1) A880-1005 nut, A521-7 low fuel switch assy (dual)	150
	(1) D205-44 hose assembly, nuts	500
	(1) D205-45 hose assembly, nuts	500
	(2) D745-7 switch assembly, fuel pressure	120
	(1) G989-6 fitting, at G239-1 panel	500
	(1) G990-4 (proximity) sensor assembly, hex nut	60
	(2) G992-1 valve assemblies, shut-off	500
	(4 per valve) G992-1 valve assembly, hex head screws	60
	(2) 10228 fittings (B270-6 or A701-11 pipe threads only)	650
	(1) 10375 adapter (B270-6 or A701-11)	500
FUEL FLOW METER INSTALLATION	(1) 564601 tube assembly, at AS4824N08 seal	325
	(1) 564601 tube assembly, at AS4824N04 seal	145
	(1) SS6565-8-4 fitting, at AS4824N08 seal	325
	(1) SS6565-8-4 fitting, at AS4824N04 seal	145
	(1) AS5178J04 nut, at G155-1 (aft) bracket	145

20-33 Special Torques (continued)

AREA	FASTENER	TORQUE (IN.-LB)
FUSELAGE	(1) D210-5 nut, ground handling ball	240
	(4) NAS6604-3 bolts, securing F050-2 stabilizer to tailcone	185
	(4) NAS6603-2 bolts, securing F050-2 stabilizer to F955-1 bracket	70
HEATER	(1) G391-1 line assembly B-nuts (apply A257-9 to upper nut threads)	245 wet
	(1) G391-2 line assembly B-nuts	100
	(1) G391-3 line assembly B-nuts	100
	(1) G391-4 line assembly B-nuts	100
	(1) G391-5 line assembly B-nuts	230-260
	(2) G392-3 diffuser assembly B-nuts	100
	(1) D210-3 nut, securing control wire	25–30
HYDRAULIC HOSES & FITTINGS	(2) AN815-3D union	95–105
	(2) AN815-4D union	135–150
	(1) AN820-4 cap, on reservoir AN804D4 T-fitting	60
	(1) AN820-6 cap, on reservoir AN834-6D T-fitting	120
	(2) D452-3 nuts, on aft and left hand servos	60
	(3) D452-4 nuts, on aft and left hand servos and on reservoir	90
	(1) D452-6 nut, on reservoir	150
	(2) B330-19 palnut, on aft and left hand servos	30
	(3) B330-21 palnut, on aft and left servos and on reservoir	45
	(1) B330-25 palnut, on reservoir	75
	(1) D205-14 line assembly B-nuts	95–105
	(1) D205-17 line assembly B-nuts	95–105
	(1) D205-18 line assembly B-nuts	135–150
	(1) D205-22 line assembly B-nuts	95–105
	(1) D205-23 line assembly B-nuts	135–150
	(1) D205-24 line assembly B-nuts	135–150
	(2) F902-1 line assembly B-nuts	135–150
	(2) F902-2 line assembly B-nuts	110–130
HYDRAULIC RESERVOIR	(1) D487-3, filler-vent	100
	(1) D516-1, filter cap	150
	(1) B563-2, sight gage	150
	(1) D507-2 solenoid	100
HYDRAULIC SERVOS	(1) D210-08 nut, attaching D200-2 scissors	25
	(1) B330-6 palnut on D200-2 scissor apex fastener	5-10
LANDING GEAR	(4) NAS6604-46 bolts, securing ground handling wheel support weldments to skid tubes	70
	(4) NAS6607P20 bolt, securing landing gear to fuselage supports and shackles	66 FT-LB
	(2) NAS6607P44 bolt, securing shackles to fuselage	66 FT-LB
	(4) B277-28 clamp, securing fairings to struts	15

20-33 Special Torques (continued)

AREA	FASTENER	TORQUE (IN.-LB)
POP-OUT FLOATS (OPTIONAL EQUIPMENT)	(2) D674-2 hose assembly, B-nuts	245
	(4) D674-6 hose assembly, B-nuts	245
	(2) D674-7 hose assembly, B-nuts	120
	(1) D674-9 hose assembly, B-nuts	245
	(2) D674-10 hose assembly, B-nuts	245
	(2) D674-11 hose assembly, B-nuts	245
	(1) D674-12 hose assembly, B-nuts	245
	(1) D674-13 hose assembly, B-nuts	245
	(2) D770-1 valve assembly	40
	(2) D770-2 valve assembly	40
	(2) D770-3 valve assembly	40
	(2) D770-4 valve assembly	40
	(2) D770-5 valve assembly	40
	(2) D770-6 valve assembly	40
	(1) D757-1 valve assembly	40 FT-LB
MAIN ROTOR BLADE	(2) B289-2 bolts, per blade, self-sealing	70
	(2) A722-4 screws, per blade, tip balance weight	40 wet
	(2) NAS1351N3-12P screws, per blade, tip cover	40 wet
MAIN ROTOR FLIGHT CONTROLS	(2) MS35206-324 screws, low rotor RPM horn V3-1 switch	4-5
MAIN ROTOR GEARBOX	(1) B254-3 strainer, main rotor gearbox sump	200
	(1) B563-2 sight gage	150
	(1) B566-1 chip detector, main rotor gearbox	150
	(1) D205-25 hose assembly, sump to pump B-nuts	120
	(8) D210-3 nuts, securing D500-2 (hydraulic) and D500-3 (main gearbox oil) pumps to main gearbox	37
	(1) F904-1 pinion plug, securing tail rotor output yoke to main gearbox	60 FT-LB, wet
	(1) A880-1208 or AN814-8D plug, main rotor gearbox filler plug	150
	(1) MS21245L8 nut, securing input yoke to main gearbox	40 FT-LB
	(2) nuts securing 103SR13A-3 sender	50
	(1) chip detector wire terminal nut	5
MAIN ROTOR HUB	(1) NAS634-105 bolt, teeter hinge and (2) NAS634-105 bolt, coning hinges **WARNING** **Scrap bolt & nut if bolt is elongated more than 0.024 inch during tightening.**	New bolt: 0.021-0.022 inch elongation, wet Used bolt: 0.020-0.022 inch elongation, wet, and cotter pin holes must align

20-33 Special Torques (continued)

AREA	FASTENER	TORQUE (IN.-LB)
MAST TUBE	(1) B277-064 clamp, lower rib to mast tube	50
PITCH LINKS	(2) 21FKF-813 or 27FKF-813 self-locking jam nuts, main rotor pitch links	300
POWERPLANT	(1) D745-3 (pressure) switch assembly	65
	(1) D38999/26FB98SA plug, N1 speed sensor connector	150
	(1) F170 fitting, engine gearbox vent	100
	(1) F727-1 line assembly, fuel pump drain	50-65
	(1) F727-2 line assembly, horizontal turbine-firewall shield assembly drain	50-65
	(1) F741-1 line assembly, fuel differential pressure switch	80
	(1) G426-1 (fuel differential pressure) switch assembly	100
	(2) nuts, securing harness wire to MGT thermocouple studs, engine-supplied	20
	(2) nuts, securing harness wires to starter-generator small terminals, starter-generator supplied	20
	(2) nuts, securing harness wires to starter-generator large terminals, starter-generator supplied	180
	(1) nut, securing harness wire to ignition exciter box, engine-supplied	15
	(2) nuts, securing harness and (2) MS21919WCH4 clamps to engine accesory gearbox, engine-supplied	40
	(2) nuts, securing F577-1 bracket assembly, engine-supplied	40
	(2) nuts, securing F577-3 bracket, engine-supplied	40
	(2) tee bolts, securing F173-1 struts to engine, engine-supplied	35-40
	(2) A880-908 or AN815-8D unions, engine oil outlet & oil tank vent	250
	(1) A880-910 or AN815-10D union, engine oil inlet	375
	(1) AN919-0D reducer and (1) AN919-2D reducer	100
	(2) NAS6605-3 bolt, securing G200-1 lug to engine (optional)	110
	(6) NAS6605H3 bolts, securing (2) F593-1 support assemblies to engine	110
	(2) NAS6605H4 bolts and (1) NAS6605H2 bolt, securing F174-1 weldment and F593-3 plate to engine	110
	(1) CV26-77 check valve, engine oil outlet (superseded; early R66s)	250
	(1) G732-4 bolt (clutch retaining)	130
SWASHPLATE	(26) NAS1352N08-8 screws, securing spacers, sleeve assembly, shield, and retainers	35 wet
	(2) NAS1352N08-4 screws, securing B769-2 bracket	35
TAIL ROTOR	(1) D210-4 nut, securing C119-2 bumper	120
	(1) NAS6606-53 bolt, teeter hinge	420
TAIL ROTOR FLIGHT CONTROLS	(1) D210-4 nut, outboard of F316-1 bellcrank assembly	90

20-33 Special Torques (continued)

AREA	FASTENER	TORQUE (IN.-LB)
TAIL ROTOR GEARBOX	(1) A610-1 vent assembly	100
	(1) B563-4 sight gage	150
	(1) B566-2 chip detector	100
	(1) Nut, securing C049-4 harness assembly to chip detector	5
	(1) D210-5 nut, pitch control housing	240
	(1) AN320-8 nut, input yoke	35-45 FT-LB
	(4) MS20074-04-06 bolts, input cap	60
	(8) MS20074-04-06 bolts, input housing and output cap	100
	(4) NAS1352-5-12P bolts (undrilled), gearbox-to-tailcone attachment	260
TAIL ROTOR GUARD	(1) NAS1352-3-14P screw, securing block assembly to stabilizer	40
WINDSHIELD	(23) AN526C832R12 screw, thru center brace	16
	(74) B526-6 screw, polycarbonate windshield fasteners	24
	(4) B526-8 screw, polycarbonate windshield fasteners	24
	(24) NAS1352-08-12P screw, polycarbonate windshield fasteners, with wire strike provisions	30

Intentionally Blank

20-34 Push-Pull Tube Rod End Adjustment

> NOTE
>
> Refer to § 18-13 to adjust C258 main rotor pitch links.

The following procedure is standard for adjusting push-pull tube rod ends:

1. Loosen palnut and jam nut on rod end shank.
2. Remove hardware securing push-pull tube rod end to attachment point per respective instructions.
3. Screw rod end in or out of push-pull tube as required to obtain proper rigging adjustment. Apply B270-21 (corrosion) protectant to exposed threads.
4. After any rod end adjustment, verify rod end threaded shank blocks passage of 0.020-inch diameter wire thru the witness hole in the push-pull tube per Figure 5-1. When no witness hole is provided, refer to Figure 5-1 for maximum rod end extension.
5. Install fastener securing push-pull tube to attachment point per respective instructions.
6. Refer to Figure 5-2. Position rod ends to allow as much push-pull tube rotation as possible without binding. Standard torque jam nuts & palnuts per § 20-32 & torque stripe per Figure 5-1.

20-35 D210-series Nuts on Critical Fasteners

When performing maintenance that involves disassembly of a critical fastener (joints with a secondary lock), reassemble the fastener using a D210-series nut.

If a fastener is disassembled that has an MS21042L-series or NAS1291-series nut with a B330-series palnut or B332-series lockwasher (secondary lock),

replace MS21042L08 nut or NAS1291-08 nut with D210-08 nut,
replace MS21042L3 nut or NAS1291-3 nut with D210-3 nut,
replace MS21042L4 nut or NAS1291-4 nut with D210-4 nut,
replace MS21042L5 nut or NAS1291-5 nut with D210-5 nut,
replace MS21042L6 nut or NAS1291-6 nut with D210-6 nut,
replace NAS1291-7 nut with D210-7 nut,
replace NAS1291-8 nut with D210-8 nut, or
replace NAS1291-10 nut with D210-10 nut.

20-36 A880 Flared Tube Components

A. Nuts – Flare

Dash Numbers	Allowable Part Numbers	Material REF	Tube OD REF
-102	AN818-2D, AN818-2W, AS5175W02	AL	1/8-inch
-103	AN818-3D, AN818-3W, AS5175W03	AL	3/16-inch
-104	AN818-4D, AN818-4W, AS5175W04	AL	1/4-inch
-105	AN818-5D, AN818-5W, AS5175W05	AL	5/16-inch
-106	AN818-6D, AN818-6W, AS5175W06	AL	3/8-inch
-108	AN818-8D, AN818-8W, AS5175W08	AL	1/2-inch
-110	AN818-10D, AN818-10W, AS5175W10	AL	5/8-inch
-202	AN818-2J, AS5175J02	CRES	1/8-inch
-203	AN818-3J, AS5175J03	CRES	3/16-inch
-204	AN818-4J, AS5175J04	CRES	1/4-inch
-205	AN818-5J, AS5175J05	CRES	5/16-inch
-206	AN818-6J, AS5175J06	CRES	3/8-inch
-208	AN818-8J, AS5175J08	CRES	1/2-inch
-210	AN818-10J, AS5175J10	CRES	5/8-inch

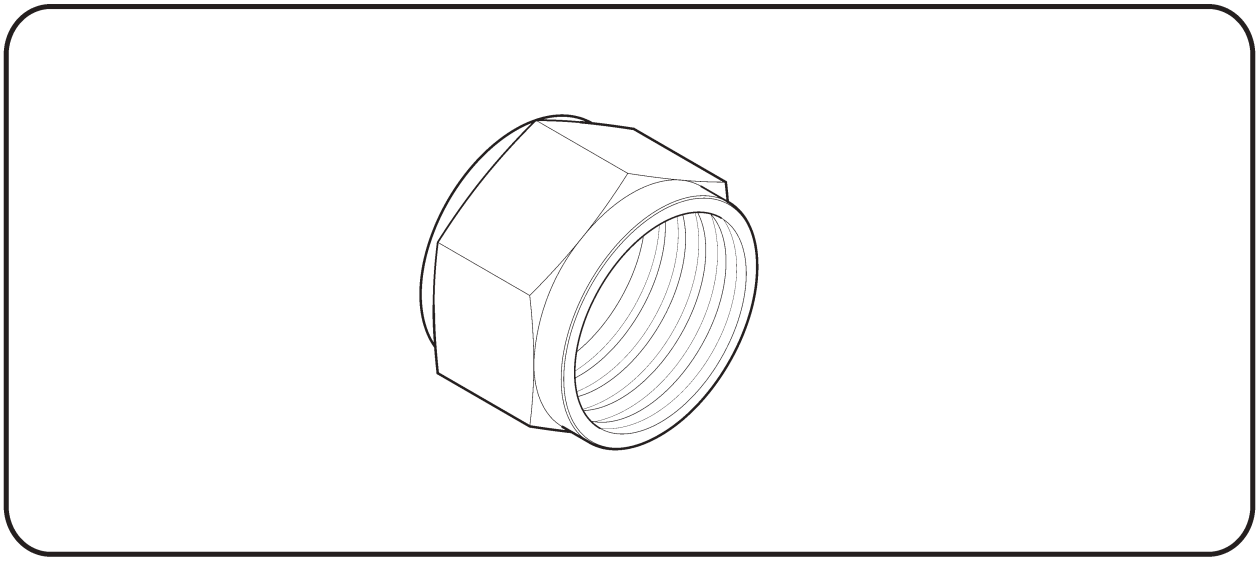

20-36 A880 Flared Tube Components (continued)

B. Sleeves

Dash Numbers	Allowable Part Numbers	Material REF	Tube OD REF
-302	MS20819-2D, AS3220D02, AS3220W02	AL	1/8-inch
-303	MS20819-3D, AS3220D03, AS3220W03	AL	3/16-inch
-304	MS20819-4D, AS3220D04, AS3220W04	AL	1/4-inch
-305	MS20819-5D, AS3220D05, AS3220W05	AL	5/16-inch
-306	MS20819-6D, AS3220D06, AS3220W06	AL	3/8-inch
-308	MS20819-8D, AS3220D08, AS3220W08	AL	1/2-inch
-310	MS20819-10D, AS3220D10, AS3220W10	AL	5/8-inch
-402	MS20819-2J, AS5176J02	CRES	1/8-inch
-403	MS20819-3J, AS5176J03	CRES	3/16-inch
-404	MS20819-4J, AS5176J04	CRES	1/4-inch
-405	MS20819-5J, AS5176J05	CRES	5/16-inch
-406	MS20819-6J, AS5176J06	CRES	3/8-inch
-408	MS20819-8J, AS5176J08	CRES	1/2-inch
-410	MS20819-10J, AS5176J10	CRES	5/8-inch

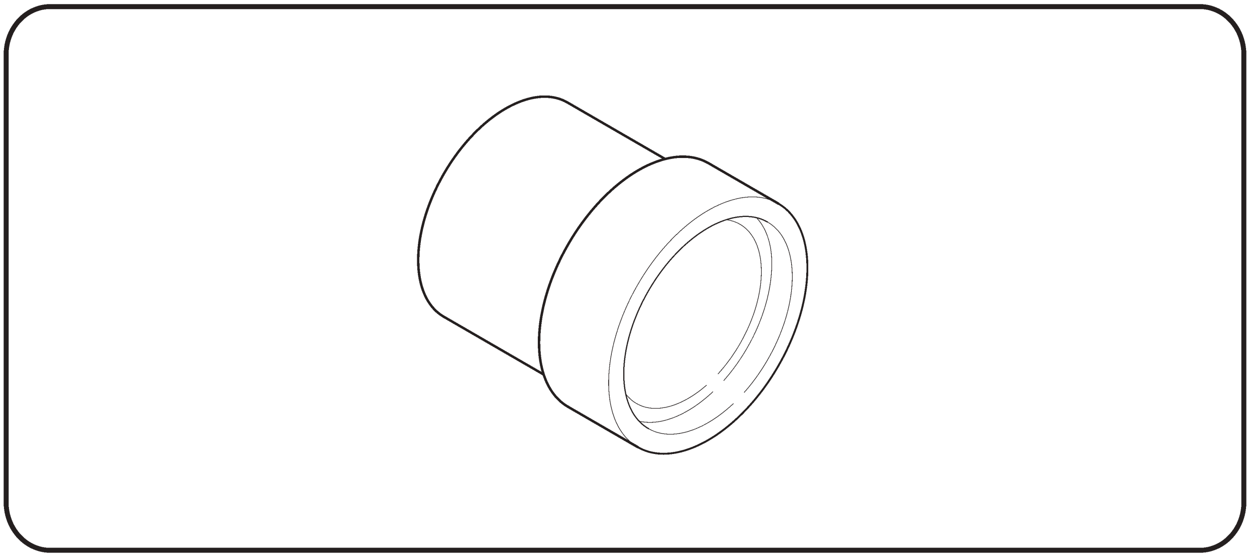

20-36 A880 Flared Tube Components (continued)

C. Adapters – NPT to Flare

Dash Numbers	Allowable Part Numbers	Material REF	Tube OD REF
-502	AN816-2D, AS5194D0202	AL	1/8-inch
-503	AN816-3D, AS5194D0302	AL	3/16-inch
-504	AN816-4D, AS5194D0402	AL	1/4-inch
-505	AN816-5D, AS5194D0502	AL	5/16-inch
-506	AN816-6D, AS5194D0604	AL	3/8-inch
-508	AN816-8D, AS5194D0806	AL	1/2-inch
-510	AN816-10D, AS5194D1008	AL	5/8-inch
-532	AN816-2J, AS5194J0202	CRES	1/8-inch
-533	AN816-3J, AS5194J0302	CRES	3/16-inch
-534	AN816-4J, AS5194J0402	CRES	1/4-inch
-535	AN816-5J, AS5194J0502	CRES	5/16-inch
-536	AN816-6J, AS5194J0604	CRES	3/8-inch
-538	AN816-8J, AS5194J0806	CRES	1/2-inch
-540	AN816-10J, AS5194J1008	CRES	5/8-inch
-562	AN816-2, AS5194-0202	STL	1/8-inch
-563	AN816-3, AS5194-0302	STL	3/16-inch
-564	AN816-4, AS5194-0402	STL	1/4-inch
-565	AN816-5, AS5194-0502	STL	5/16-inch
-566	AN816-6, AS5194-0604	STL	3/8-inch
-568	AN816-8, AS5194-0806	STL	1/2-inch
-570	AN816-10, AS5194-1008	STL	5/8-inch

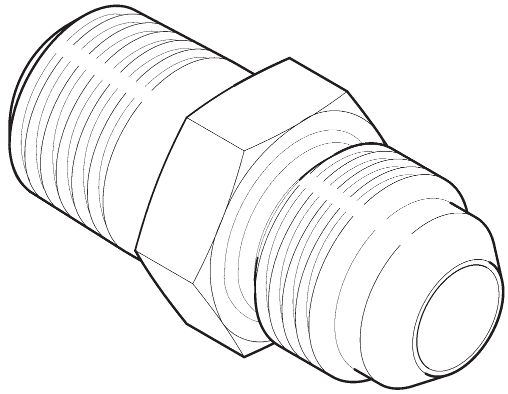

20-36 A880 Flared Tube Components (continued)

D. Elbows – 90°, NPT to Flare

Dash Numbers	Allowable Part Numbers	Material REF	Tube OD REF
-602	AN822-2D, MS20822-2D, AS5195W0202	AL	1/8-inch
-603	AN822-3D, MS20822-3D, AS5195W0302	AL	3/16-inch
-604	AN822-4D, MS20822-4D, AS5195W0402	AL	1/4-inch
-605	AN822-5D, MS20822-5D, AS5195W0502	AL	5/16-inch
-606	AN822-6D, MS20822-6D, AS5195W0604	AL	3/8-inch
-608	AN822-8D, MS20822-8D, AS5195W0806	AL	1/2-inch
-610	AN822-10D, MS20822-10D, AS5195W1008	AL	5/8-inch
-632	AN822-2J, MS20822-2J, AS5195J0202	CRES	1/8-inch
-633	AN822-3J, MS20822-3J, AS5195J0302	CRES	3/16-inch
-634	AN822-4J, MS20822-4J, AS5195J0402	CRES	1/4-inch
-635	AN822-5J, MS20822-5J, AS5195J0502	CRES	5/16-inch
-636	AN822-6J, MS20822-6J, AS5195J0604	CRES	3/8-inch
-638	AN822-8J, MS20822-8J, AS5195J0806	CRES	1/2-inch
-640	AN822-10J, MS20822-10J, AS5195J1008	CRES	5/8-inch
-662	AN822-2, MS20822-2, AS5195-0202	STL	1/8-inch
-663	AN822-3, MS20822-3, AS5195-0302	STL	3/16-inch
-664	AN822-4, MS20822-4, AS5195-0402	STL	1/4-inch
-665	AN822-5, MS20822-5, AS5195-0502	STL	5/16-inch
-666	AN822-6, MS20822-6, AS5195-0604	STL	3/8-inch
-668	AN822-8, MS20822-8, AS5195-0806	STL	1/2-inch
-670	AN822-10, MS20822-10, AS5195-1008	STL	5/8-inch

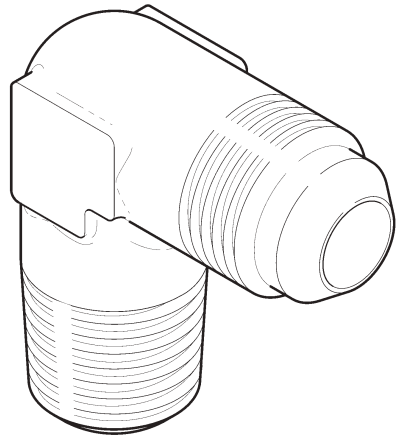

20-36 A880 Flared Tube Components (continued)

E. Elbows – 45°, NPT to Flare

Dash Numbers	Allowable Part Numbers	Material REF	Tube OD REF
-702	AN823-2D, MS20823-2D, AS5196W0202	AL	1/8-inch
-703	AN823-3D, MS20823-3D, AS5196W0302	AL	3/16-inch
-704	AN823-4D, MS20823-4D, AS5196W0402	AL	1/4-inch
-705	AN823-5D, MS20823-5D, AS5196W0502	AL	5/16-inch
-706	AN823-6D, MS20823-6D, AS5196W0604	AL	3/8-inch
-708	AN823-8D, MS20823-8D, AS5196W0806	AL	1/2-inch
-710	AN823-10D, MS20823-10D, AS5196W1008	AL	5/8-inch
-732	AN823-2J, MS20823-2J, AS5196J0202	CRES	1/8-inch
-733	AN823-3J, MS20823-3J, AS5196J0302	CRES	3/16-inch
-734	AN823-4J, MS20823-4J, AS5196J0402	CRES	1/4-inch
-735	AN823-5J, MS20823-5J, AS5196J0502	CRES	5/16-inch
-736	AN823-6J, MS20823-6J, AS5196J0604	CRES	3/8-inch
-738	AN823-8J, MS20823-8J, AS5196J0806	CRES	1/2-inch
-740	AN823-10J, MS20823-10J, AS5196J1008	CRES	5/8-inch
-762	AN823-2, MS20823-2, AS5196-0202	STL	1/8-inch
-763	AN823-3, MS20823-3, AS5196-0302	STL	3/16-inch
-764	AN823-4, MS20823-4, AS5196-0402	STL	1/4-inch
-765	AN823-5, MS20823-5, AS5196-0502	STL	5/16-inch
-766	AN823-6, MS20823-6, AS5196-0604	STL	3/8-inch
-768	AN823-8, MS20823-8, AS5196-0806	STL	1/2-inch
-770	AN823-10, MS20823-10, AS5196-1008	STL	5/8-inch

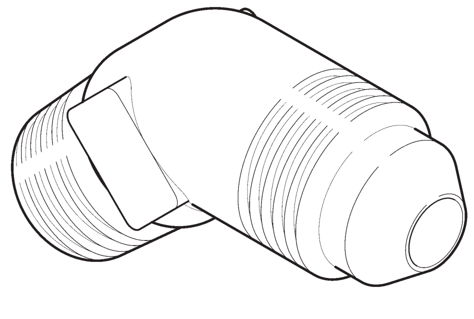

20-36 A880 Flared Tube Components (continued)

F. Elbows – 90°, Bulkhead Flare to Flare

Dash Numbers	Allowable Part Numbers	Material REF	Tube OD REF
-802	AN833-2D, AS1038D0202, AS1038W0202	AL	1/8-inch
-803	AN833-3D, AS1038D0303, AS1038W0303	AL	3/16-inch
-804	AN833-4D, AS1038D0404, AS1038W0404	AL	1/4-inch
-805	AN833-5D, AS1038D0505, AS1038W0505	AL	5/16-inch
-806	AN833-6D, AS1038D0606, AS1038W0606	AL	3/8-inch
-808	AN833-8D, AS1038D0808, AS1038W0808	AL	1/2-inch
-810	AN833-10D, AS1038D1010, AS1038W1010	AL	5/8-inch
-832	AN833-2J, AS1038J0202	CRES	1/8-inch
-833	AN833-3J, AS1038J0303	CRES	3/16-inch
-834	AN833-4J, AS1038J0404	CRES	1/4-inch
-835	AN833-5J, AS1038J0505	CRES	5/16-inch
-836	AN833-6J, AS1038J0606	CRES	3/8-inch
-838	AN833-8J, AS1038J0808	CRES	1/2-inch
-840	AN833-10J, AS1038J1010	CRES	5/8-inch
-862	AN833-2, AS1038-0202	STL	1/8-inch
-863	AN833-3, AS1038-0303	STL	3/16-inch
-864	AN833-4, AS1038-0404	STL	1/4-inch
-865	AN833-5, AS1038-0505	STL	5/16-inch
-866	AN833-6, AS1038-0606	STL	3/8-inch
-868	AN833-8, AS1038-0808	STL	1/2-inch
-870	AN833-10, AS1038-1010	STL	5/8-inch

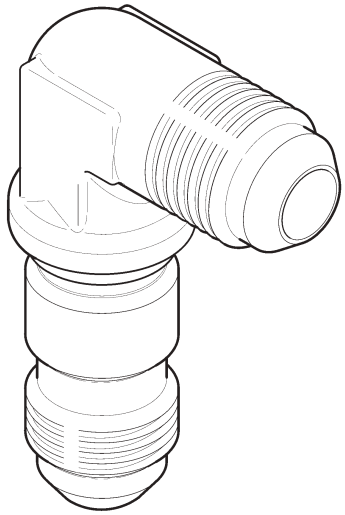

20-36 A880 Flared Tube Components (continued)

G. Unions – Flare to Flare

Dash Numbers	Allowable Part Numbers	Material REF	Tube OD REF
-902	AN815-2D, AS5174D0202, AS5174W0202	AL	1/8-inch
-903	AN815-3D, AS5174D0303, AS5174W0303	AL	3/16-inch
-904	AN815-4D, AS5174D0404, AS5174W0404	AL	1/4-inch
-905	AN815-5D, AS5174D0505, AS5174W0505	AL	5/16-inch
-906	AN815-6D, AS5174D0606, AS5174W0606	AL	3/8-inch
-908	AN815-8D, AS5174D0808, AS5174W0808	AL	1/2-inch
-910	AN815-10D, AS5174D1010, AS5174W1010	AL	5/8-inch
-932	AN815-2J, AS5174J0202	CRES	1/8-inch
-933	AN815-3J, AS5174J0303	CRES	3/16-inch
-934	AN815-4J, AS5174J0404	CRES	1/4-inch
-935	AN815-5J, AS5174J0505	CRES	5/16-inch
-936	AN815-6J, AS5174J0606	CRES	3/8-inch
-938	AN815-8J, AS5174J0808	CRES	1/2-inch
-940	AN815-10J, AS5174J1010	CRES	5/8-inch
-962	AN815-2, AS5174-0202	STL	1/8-inch
-963	AN815-3, AS5174-0303	STL	3/16-inch
-964	AN815-4, AS5174-0404	STL	1/4-inch
-965	AN815-5, AS5174-0505	STL	5/16-inch
-966	AN815-6, AS5174-0606	STL	3/8-inch
-968	AN815-8, AS5174-0808	STL	1/2-inch
-970	AN815-10, AS5174-1010	STL	5/8-inch

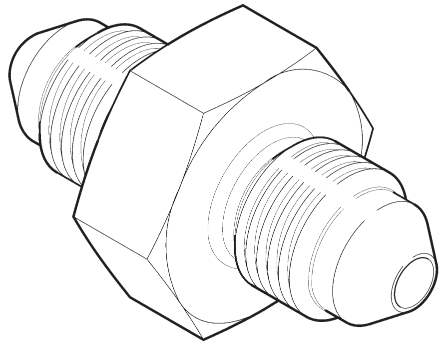

20-36 A880 Flared Tube Components (continued)

H. Nuts – Hex

Dash Numbers	Allowable Part Numbers	Material REF	Tube OD REF
-1002	AN924-2D, AN924-2W, AS5178W02	AL	1/8-inch
-1003	AN924-3D, AN924-3W, AS5178W03	AL	3/16-inch
-1004	AN924-4D, AN924-4W, AS5178W04	AL	1/4-inch
-1005	AN924-5D, AN924-5W, AS5178W05	AL	5/16-inch
-1006	AN924-6D, AN924-6W, AS5178W06	AL	3/8-inch
-1008	AN924-8D, AN924-8W, AS5178W08	AL	1/2-inch
-1010	AN924-10D, AN924-10W, AS5178W10	AL	5/8-inch
-1032	AN924-2J, AS5178J02	CRES	1/8-inch
-1033	AN924-3J, AS5178J03	CRES	3/16-inch
-1034	AN924-4J, AS5178J04	CRES	1/4-inch
-1035	AN924-5J, AS5178J05	CRES	5/16-inch
-1036	AN924-6J, AS5178J06	CRES	3/8-inch
-1038	AN924-8J, AS5178J08	CRES	1/2-inch
-1040	AN924-10J, AS5178J10	CRES	5/8-inch
-1062	AN924-2, AS5178-02	STL	1/8-inch
-1063	AN924-3, AS5178-03	STL	3/16-inch
-1064	AN924-4, AS5178-04	STL	1/4-inch
-1065	AN924-5, AS5178-05	STL	5/16-inch
-1066	AN924-6, AS5178-06	STL	3/8-inch
-1068	AN924-8, AS5178-08	STL	1/2-inch
-1070	AN924-10, AS5178-10	STL	5/8-inch

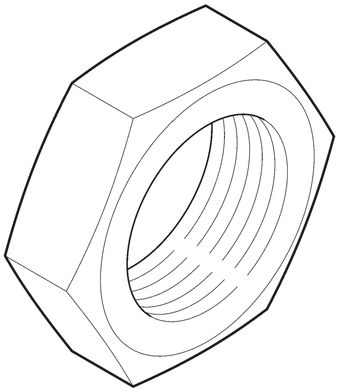

20-36 A880 Flared Tube Components (continued)

I. Tees – NPT to Flare

Dash Numbers	Allowable Part Numbers	Material REF	Tube OD REF
-1102	AN826-2D, MS20826-2D, AS5198W020202	AL	1/8-inch
-1103	AN826-3D, MS20826-3D, AS5198W030203	AL	3/16-inch
-1104	AN826-4D, MS20826-4D, AS5198W040204	AL	1/4-inch
-1105	AN826-5D, MS20826-5D, AS5198W050205	AL	5/16-inch
-1106	AN826-6D, MS20826-6D, AS5198W060406	AL	3/8-inch
-1108	AN826-8D, MS20826-8D, AS5198W080608	AL	1/2-inch
-1110	AN826-10D, MS20826-10D, AS5198W100810	AL	5/8-inch
-1132	AN826-2J, MS20826-2J, AS5198J020202	CRES	1/8-inch
-1133	AN826-3J, MS20826-3J, AS5198J030203	CRES	3/16-inch
-1134	AN826-4J, MS20826-4J, AS5198J040204	CRES	1/4-inch
-1135	AN826-5J, MS20826-5J, AS5198J050205	CRES	5/16-inch
-1136	AN826-6J, MS20826-6J, AS5198J060406	CRES	3/8-inch
-1138	AN826-8J, MS20826-8J, AS5198J080608	CRES	1/2-inch
-1140	AN826-10J, MS20826-10J, AS5198J100810	CRES	5/8-inch
-1162	AN826-2, MS20826-2, AS5198-020202	STL	1/8-inch
-1163	AN826-3, MS20826-3, AS5198-030203	STL	3/16-inch
-1164	AN826-4, MS20826-4, AS5198-040204	STL	1/4-inch
-1165	AN826-5, MS20826-5, AS5198-050205	STL	5/16-inch
-1166	AN826-6, MS20826-6, AS5198-060406	STL	3/8-inch
-1168	AN826-8, MS20826-8, AS5198-080608	STL	1/2-inch
-1170	AN826-10, MS20826-10, AS5198-100810	STL	5/8-inch

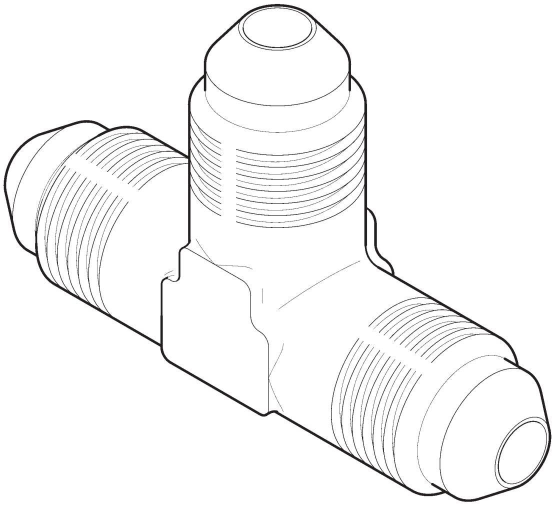

20-36 A880 Flared Tube Components (continued)

J. Plugs without Holes

Dash Numbers	Allowable Part Numbers	Material REF	Tube OD REF
-1202	AN814-2D, AN814-2W, AS5169D02, AS5169W02	AL	1/8-inch
-1203	AN814-3D, AN814-3W, AS5169D03, AS5169W03	AL	3/16-inch
-1204	AN814-4D, AN814-4W, AS5169D04, AS5169W04	AL	1/4-inch
-1205	AN814-5D, AN814-5W, AS5169D05, AS5169W05	AL	5/16-inch
-1206	AN814-6D, AN814-6W, AS5169D06, AS5169W06	AL	3/8-inch
-1208	AN814-8D, AN814-8W, AS5169D08, AS5169W08	AL	1/2-inch
-1210	AN814-10D, AN814-10W, AS5169D10, AS5169W10	AL	5/8-inch
-1232	AN814-2J, AS5169J02	CRES	1/8-inch
-1233	AN814-3J, AS5169J03	CRES	3/16-inch
-1234	AN814-4J, AS5169J04	CRES	1/4-inch
-1235	AN814-5J, AS5169J05	CRES	5/16-inch
-1236	AN814-6J, AS5169J06	CRES	3/8-inch
-1238	AN814-8J, AS5169J08	CRES	1/2-inch
-1240	AN814-10J, AS5169J10	CRES	5/8-inch
-1262	AN814-2, AS5169-02	STL	1/8-inch
-1263	AN814-3, AS5169-03	STL	3/16-inch
-1264	AN814-4, AS5169-04	STL	1/4-inch
-1265	AN814-5, AS5169-05	STL	5/16-inch
-1266	AN814-6, AS5169-06	STL	3/8-inch
-1268	AN814-8, AS5169-08	STL	1/2-inch
-1270	AN814-10, AS5169-10	STL	5/8-inch

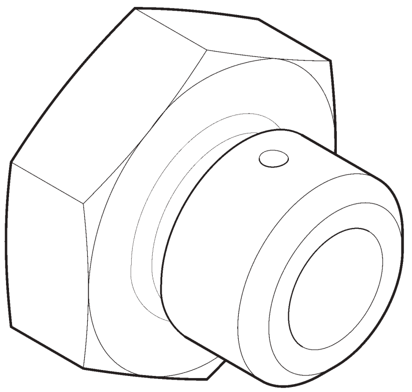

20-36 A880 Flared Tube Components (continued)

K. Plugs with Holes

Dash Numbers	Allowable Part Numbers	Material REF	Tube OD REF
-1302	AN814-2DL, AN814-2WL, AS5169D02L, AS5169W02L	AL	1/8-inch
-1303	AN814-3DL, AN814-3WL, AS5169D03L, AS5169W03L	AL	3/16-inch
-1304	AN814-4DL, AN814-4 WL, AS5169D04L, AS5169W04L	AL	1/4-inch
-1305	AN814-5DL, AN814-5WL, AS5169D05L, AS5169W05L	AL	5/16-inch
-1306	AN814-6DL, AN814-6WL, AS5169D06L, AS5169W06L	AL	3/8-inch
-1308	AN814-8DL, AN814-8WL, AS5169D08L, AS5169W08L	AL	1/2-inch
-1310	AN814-10DL, AN814-10WL, AS5169D10L, AS5169W10L	AL	5/8-inch
-1332	AN814-2JL, AS5169J02L	CRES	1/8-inch
-1333	AN814-3JL, AS5169J03L	CRES	3/16-inch
-1334	AN814-4JL, AS5169J04L	CRES	1/4-inch
-1335	AN814-5JL, AS5169J0SL	CRES	5/16-inch
-1336	AN814-6JL, AS5169J06L	CRES	3/8-inch
-1338	AN814-8JL, AS5169J0BL	CRES	1/2-inch
-1340	AN814-10JL, AS5169J10L	CRES	5/8-inch
-1362	AN814-2L, AS5169-02L	STL	1/8-inch
-1363	AN814-3L, AS5169-03L	STL	3/16-inch
-1364	AN814-4L, AS5169-04L	STL	1/4-inch
-1365	AN814-5L, AS5169-05L	STL	5/16-inch
-1366	AN814-6L, AS5169-06L	STL	3/8-inch
-1368	AN814-8L, AS5169-08L	STL	1/2-inch
-1370	AN814-10L, AS5169-10L	STL	5/8-inch

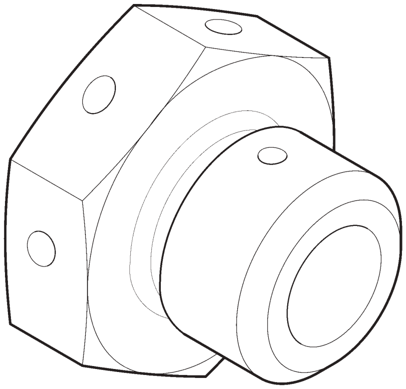

Intentionally Blank

20-40 Non-Destructive Testing

> **WARNING**
>
> **Review appropriate Safety Data Sheet (SDS) when working in proximity to hazardous materials. Specific recommendations for use of personal protective equipment are located in the SDS.**

20-41 Magnetic Particle Inspection

Ferromagnetic steel parts must be inspected for structural defects using magnetic particle inspection.

Steel parts covered by this specification shall be inspected per ASTM E 1444 wet process with ultra-violet light. Applicable requirements and limitations of the above standard shall apply. Parts shall be thoroughly demagnetized and cleaned after inspections. Record the size and location of all rejectable indications.

Procedures and equipment used to perform the inspection shall conform to requirements of ASTM E 1444. Whenever possible, parts shall be inspected with both circular and longitudinal magnetization.

A. Inspection Criteria

Parts (except gears) which are inspected by magnetic particle inspection shall be accepted or rejected according to the following criteria:

Acceptable indications:

- Indications smaller than 0.015 inch are not considered ratable.
- Indications caused by sharp changes in cross-section or part geometry.

Rejectable indications:

- Indications interpreted as cracks, seams, laps, shuts, or any flaws which are open to the surface.
- Indications oriented at an angle of more than 15 degrees from the longitudinal axis with length exceeding 0.125 inch.
- Circumferential indications on any shoulder or fillet (changes in diameter).
- Any indications which break over an edge, shoulder, fillet radius, keyway, spline, or an adjacent area of part more than 0.015 inch.
- Indications caused by undercuts at the toe of a weld.
- Indications caused by cracks in the weld or parent metal.
- Indications caused by inclusions in weld material exceeding 0.1 inch in length.

20-42 Fluorescent Penetrant Inspection

This specification provides for surface inspection of parts fabricated from nonmagnetic materials to detect discontinuities open to the surface, such as cracks, cold shuts, laps, porosity and other surface defects.

Applicable requirements and limitations of ASTM E1417 shall apply. After inspection is complete, solvent clean parts.

The step-by-step procedure and equipment used to perform the inspection shall be accomplished per ASTM E1417. The following types, methods, and sensitivity levels are recommended:

Type: 1–Fluorescent dye
Method: A–Water washable
Sensitivity: Level 2–Medium
Form: A–Dry powder

A. Inspection Criteria

Parts inspected by fluorescent penetrant method shall be accepted or rejected on basis of acceptance limits specified. If acceptance limits are not specified, rejectable surface defects and any of the following:

- Cracks
- Seams
- Cold shuts or laps
- Surface inclusions
- In castings, aligned discontinuous surface indications other than cracks, cold shuts and inclusions are rejectable if more than 3/8 inch in length.

20-50 Corrosion Control

20-51 Conversion Coat – Aluminum

Use the following procedures to prepare and apply conversion coat to aluminum alloys. Conversion coat improves corrosion resistance and adherence of paint and adhesives.

CAUTION

Do not allow Bonderite C-IC 33 Aero or M-CR 1201/1132 Aero to contact bonded joints.

A. Procedure

1. Unless otherwise specified, lightly scuff clean surface with 320-grit aluminum-oxide abrasive paper to remove corrosion or other contaminants.
2. Apply Bonderite C-IC 33 Aero to surface for 2–5 minutes. DO NOT allow Bonderite C-IC 33 Aero to dry; re-apply as required.
3. Rinse thoroughly with clean, potable water.

20-51 Conversion Coat – Aluminum (continued)

A. Procedure (continued)

4. Apply Bonderite M-CR 1201 Aero to surface for 2–5 minutes (should be light golden brown). DO NOT allow Bonderite M-CR 1201 Aero to dry; re-apply as required.

5. Rinse thoroughly with clean, potable water. Gently wipe with clean & dry cloth, blow dry, or allow to air dry.

B. Felt Tip Applicator

Apply Bonderite M-CR 1132 Aero per manufacturer's recommendations.

20-60 Priming and Painting

This specification outlines preparation and application requirements for primers and topcoat. Primers provide corrosion protection and a final finish or a base for topcoat. Use only approved materials listed in § 20-70.

Do not prime or paint with a topcoat finish the following areas (unless directed):

- Sliding friction joints.
- Stainless steel parts.
- Swivel joints and adjustable rod ends.
- Plastic, rubber, electrical components and wires or similar materials.
- Bolted joints where torque is a specific requirement for clamping action.
- Bearing press fit or close tolerance slip fit joints (except where wet primer is part of the assembly procedure).

WARNING

Review appropriate Safety Data Sheet (SDS) when working in proximity to hazardous materials. Specific recommendations for use of personal protective equipment are located in the SDS.

A. Priming

1. Preparing Aluminum

   Unless otherwise specified, conversion coating per § 20-51 is standard treatment before priming aluminum. If bare aluminum is primed without conversion coating, the following procedure must be used:

   a. Alkaline clean if immersion is practical, otherwise wipe clean with an approved degreasing agent. Do not allow alkaline cleaner to contact bonded joints.

   b. Lightly scuff the surface with Scotch-Brite pads.

   c. Wipe with a tack rag to remove any foreign material or damp wipe with an approved solvent.

   d. Air dry. Do not touch parts with bare hands until primed.

20-60 Priming and Painting (continued)

A. Priming (continued)

2. Preparing Steel

Alkaline clean is the preferred method for cleaning stainless steel. Alternately, stainless steel may be cleaned using an approved solvent. Do not allow alkaline cleaner to contact bonded joints.

Steel parts should only be cleaned using an approved solvent; using an alkaline cleaning process on steel may cause a corrosive reaction.

Where immersion is not practical or for extremely greasy or dirty parts, a preclean in a solvent vapor degreaser may be used.

Air or blow dry using filtered, dry, compressed air.

3. Application

Apply primer after mixing per manufacturer's recommendations. Primer coating is not to exceed 0.0005–0.0020 inch thickness per coat. For parts with internal openings, such as tubes, prime the inside as follows:

a. Thin primer to watery consistency using required reducer.
b. Pour in primer, slosh around, then drain immediately.
c. Dry parts at least (6) hours before using.

4. Inspection

Inspect for complete coverage and excessive thickness. If primer is excessively thick, strip part and re-prime. Refer to § 20-70 for approved materials.

> NOTE
>
> Primed areas that have been sanded to bare metal must have conversion coating (if required) and primer re-applied prior to topcoat to restore anti-corrosion properties.

B. Painting

Prior to liquid topcoat application, ensure surfaces have been cleaned and primed. In general, most parts will be cleaned and primed as detail parts. However, in some cases, such as the gearbox assembly, this is not practical and primer and topcoat are applied on the assembled component.

Previously primed surfaces, or primed surfaces that have completely cured require the following preparation before paint:

1. Lightly sand using 220-grit or finer sandpaper.
2. Lightly scuff with Scotch Brite pads (optional).
3. Wipe with clean cloth and approved solvent.
4. Wipe with tack cloth.
5. Apply topcoat.

20-70 Approved Materials

The following items are available from the noted manufacturer(s) or their distributor(s). Check with appropriate regulatory authority(s) for allowable usage of materials.

WARNING

Review appropriate Safety Data Sheet (SDS) when working in proximity to hazardous materials. Specific recommendations for use of personal protective equipment are located in the SDS.

CAUTION

Follow product manufacturer's instructions for handling and storage.

20-71 Paint Strippers

PRODUCT	MANUFACTURER/SUPPLIER	APPLICATION
Cee-Bee Stripper A-292NC-M	McGean-Rohco: Cee-Bee Division Downey, CA	Metal parts, except blades and flex plates. Do not use near mechanically fastened or bonded joints.
Plastic Media Blasting System, AMMO 301 size 20/30, type II (or equivalent polymer media)	Pauli Systems Inc. Fairfield, CA	Metal parts except blades and unsupported sheet metal less than 0.040 inch thick. Pressure for steel frames: 40–55 PSI Pressure for aluminum parts: 30–40 PSI

20-72 Solvents and Cleaners

PRODUCT	MANUFACTURER/SUPPLIER	APPLICATION
QSOL 220	Safety-Kleen Systems, Inc. Plano, TX	General use for cleaning prior to applying primer, topcoat, adhesive, or sealant.
Benzene, 1-Chloro-4 (Trifluoromethyl) PCBTF***	Any	
Acetone***	Any	
220 Low VOC Cleaner	Axalta, Wilmington, DE	
Final Klean 3909S	Du Pont Chemical Los Angeles, CA	
XP Aerospace Prep Surface Cleaner	AkzoNobel, Waukegan, IL	
EM-Citro*	LPS Laboratories, Inc. Tucker, GA	Removing adhesive residue on cabin and polycarbonate & acrylic windshield.
Lacolene (Aliphatic Hydrocarbon)	Any	Windshield and plastic cleaning and general residue removal.
Plexus®	B.T.I. Chemical Co. Oak Park, CA	
Exhaust Cleaner	Pacific Products, Inc. Sutter Creek, CA	Removing exhaust residue. Do not use on TR blades, TR hub, or TR gearbox, or on bonded joints or bearings.

20-72 Solvents and Cleaners (continued)

PRODUCT	MANUFACTURER/SUPPLIER	APPLICATION
Presolve	LPS Laboratories, Inc. Tucker, GA	Hydraulic components only.
Tetrachloroethylene (Perchloroethylene)	Any	Vapor degreaser.
815 GD SF50	Brulin Corporation Indianapolis, IN L&R Mfg. Co. Kearny, NJ	Ultrasonic cleaning, general use.**
#112 Ammoniated or #222 Nonammoniated cleaning solution #194 rinse solution	L&R Mfg. Co. Kearny, NJ	Ultrasonic cleaning, avionics components only.
Cleanup Wipe E-4365	Sontara Candler, NC	Cleaning and drying.
Snoop Liquid Leak Detector	Swagelok Salon, OH	Leak detector.

* May be used on acrylic plastic.
** Mix 5%–20% by volume; titration not required.
*** Acetone and PCBTF may be mixed 50–50.

20-73 Fillers and Putty

PRODUCT	MANUFACTURER/SUPPLIER	APPLICATION
05960 Glazing Putty 05860 Dry Guide Coat 31180 Finishing Glaze SBF1191 FE-351 Cream Hardener	3M St. Paul, MN Gearhead Products Indianapolis, IN Catalyst Systems Gnadenhutten, OH	Minor surface imperfections.

20-74 Torque Seal

PRODUCT	MANUFACTURER/SUPPLIER	APPLICATION
83314 thru 83321 Except 83316 (red)	Dykem Cross-Check ITW Pro Brands	Torque seal.

20-75 Primers

A. Non-chromate Primers

	Corlar 13580S*	Desoprime CA7502*	Desoprime CA7422*
Manufacturer	Axalta	PPG	PPG
Base	Corlar 13580S Epoxy Primer	CA7502A	CA7422A
Activator	Corlar 13180S Epoxy Activator	CA7502B	CA7422B
Reducer	13756S VOC-Exempt Reducer	CA7502C	CA7422C
Base: Activator: Reducer	4:1:1	4:4:1	4:4:1
Viscosity	17-21 sec in Zahn #2	15-19 sec in Zahn #2	15-19 sec in Zahn #2
Induction time	30 minutes	2 hours at 55–70°F 1 hour at 71–80°F 30 minutes > 70°F	2 hours at 55–68°F 1 hour at 69–95°F
Pot life	8 hours at 70°F	4 hours at 70°F	4 hours at 70°F
Flash off time	None	30 minutes	30 minutes
Dry time	2 hours at 70°F 1 hour at 130°F	3 hours at 70°F 30 minutes at 120°F	3 hours at 70°F 30 minutes at 120°F
Recoat window	48 hours	48 hours	48 hours

* Shelf life per manufacturer's recommendation.

B. Chromate Primers

	44GN007*	10P20-44*
Manufacturer	PPG	AkzoNobel
Base	44GN007	10P20-44
Activator	44GN007CAT	EC-265 or EC-273
Reducer	Distilled or deionized water	TR-114 or TR-102
Base: Activator: Reducer	3:1:8	3:1:1
Viscosity	18–22 seconds in Zahn #2	13–19 seconds in Zahn #2
Induction time	None	None
Pot life	4 hours at 70°F	4 hours at 77°F
Flash off time	15 minutes	30 minutes
Dry time	2 hours at 70°F 45 minutes at 120°F	30 minutes at 140°F
Recoat window	24 hours	24 hours

* Shelf life per manufacturer's recommendation.

20-76 Powder Coat

PRODUCT	MANUFACTURER
Interpon 100-AL101QF Gray Zinc Rich Epoxy Powder*	AkzoNobel Santa Fe Springs, CA
81-2158 Vitralon Grey Zinc Rich Epoxy Powder*	Pratt & Lambert Chemical Coatings Buffalo, NY
39/80020 Smooth Matte Black Polyester Topcoat Powder*	Tiger Drylac USA Cucamonga, CA
49/72460 Smooth Glossy Gray RAL 7043 Polyester Topcoat Powder*	Tiger Drylac USA Cucamonga, CA
49/22460 Smooth Glossy Yellow RAL 1028 Polyester Topcoat Powder*	Tiger Drylac USA Cucamonga, CA
PFWF104S9 White Polyester Topcoat Powder*	Dupont Co. Wilmington, DE

* Shelf life is 12 months from date of manufacture at ambient temperature.

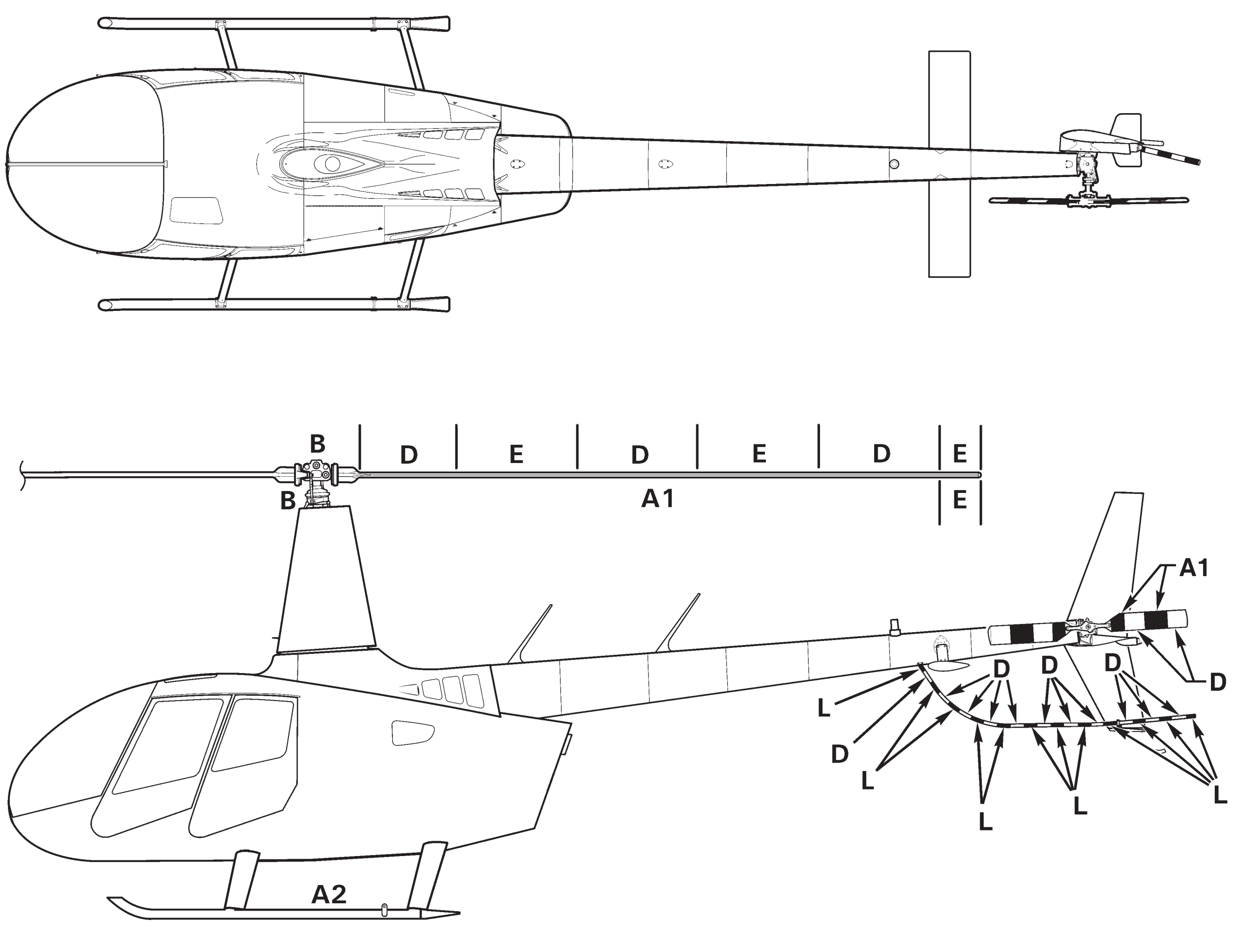

NOTE: Refer to Chapter 62 for rotor blade paint dimensions. Exterior surface codes are D & F unless otherwise specified.

FIGURE 20-3 PAINT CODES

20-77 Paints

Refer to Figures 20-3 & 20-4 for paint code application. Paint codes for specific helicopter serial numbers are listed on the inside cover of Airframe Maintenance Record (logbook).

FINISH CODE	MATERIAL*	ADDITIVES	MANUFACTURER	RHC PART NO.	APPLICATION
A1	Flat Black 18BK006	18BK006CAT Catalyst	PPG Aerospace; Irvine, CA	18BK006	Blade black
	Abrasion Resistant 23T3-90 Black	PC-216 Curing Solution	AkzoNobel; Waukegan, IL	23T3-90	
A2	FR2-55 Mat Topcoat	Thinner: water	Mapaero; Pamiers, France	557Z7038B005K	Interior, skid tube, windshield and window trim black
	Aerofine 8250 Topcoat	Thinner: water	AkzoNobel; Waukegan, IL	A8250/F9007	

20-77 Paints (continued)

FINISH CODE	MATERIAL*	ADDITIVES	MANUFACTURER	RHC PART NO.	APPLICATION
A3	Cardinal A-2000 Flat Black		Cardinal; Cleveland, OH	A-2000-BKE30903	Interior, skid tube, windshield and window trim touch up (Aerosol)
	Krylon 1613 Semi-Flat Black		Krylon; Colombus, OH	1613	
B	Dark Gray Imron AF400/AF700	13100S Activator 13110S Activator	Axalta; Wilmington, DE	DS020EP	Dark grey
D	White Imron AF400/AF700	13100S Activator 13110S Activator	Axalta; Wilmington, DE	N0774EP	White
E	Yellow Imron AF400/AF700	13100S Activator 13110S Activator	Axalta; Wilmington, DE	N0680EP	Yellow
F	Imron AF400/AF700 Colors	13100S Activator 13110S Activator	Axalta; Wilmington, DE	Refer to Airframe Maintenance Record	Exterior
G	Clear Imron AF740	13100S Activator 13110S Activator 13930S Reducer	Axalta; Wilmington, DE	AF740	Clear coat
	1311 Matte Clear Coat		Krylon; Columbus, OH	1311	Clear coat aerosol
J	White Imron 2.1 FT	9T00-A Activator D-121 Tint D-101 Tint 2100-P 2.1 Binder 9T20 Flattener	Axalta; Wilmington, DE	9T00-A D121 D101 2100P 9T20	Floats
K	Printcolor White Ink 750-9005 Printcolor Black Ink 750-8005 Printcolor Maize Yellow Ink 750-1205 Printcolor Carnation Red 750-3005	Printcolor Glass Hardener 700 Gensolve Thinner GS-017 Slow Retarder 10-03432	Deco; Orange, CA	7509005 7508005 7501205 7503005	Silkscreen
L	Red Imron AF400/AF700	13100S Activator 13110S Activator	Axalta; Wilmington, DE	N0759EP	Red
O	Light Gray Imron AF400/AF700	13100S Activator 13110S Activator	Axalta; Wilmington, DE	N0020	Baggage compartment
P	Silver Bullet AM Tracer Black 20-452AM-F1	16-CURE-F1 Activator	Burke; Ridgefield, WA	20-452AM-F1	R66 Middle seat
Q	ProtectaClear		Everbrite; Rancho Cordova, CA	Protecta	Optional on bare area of main rotor spar, refer to R66 SL-37

* Shelf life per manufacturer's recommendation.

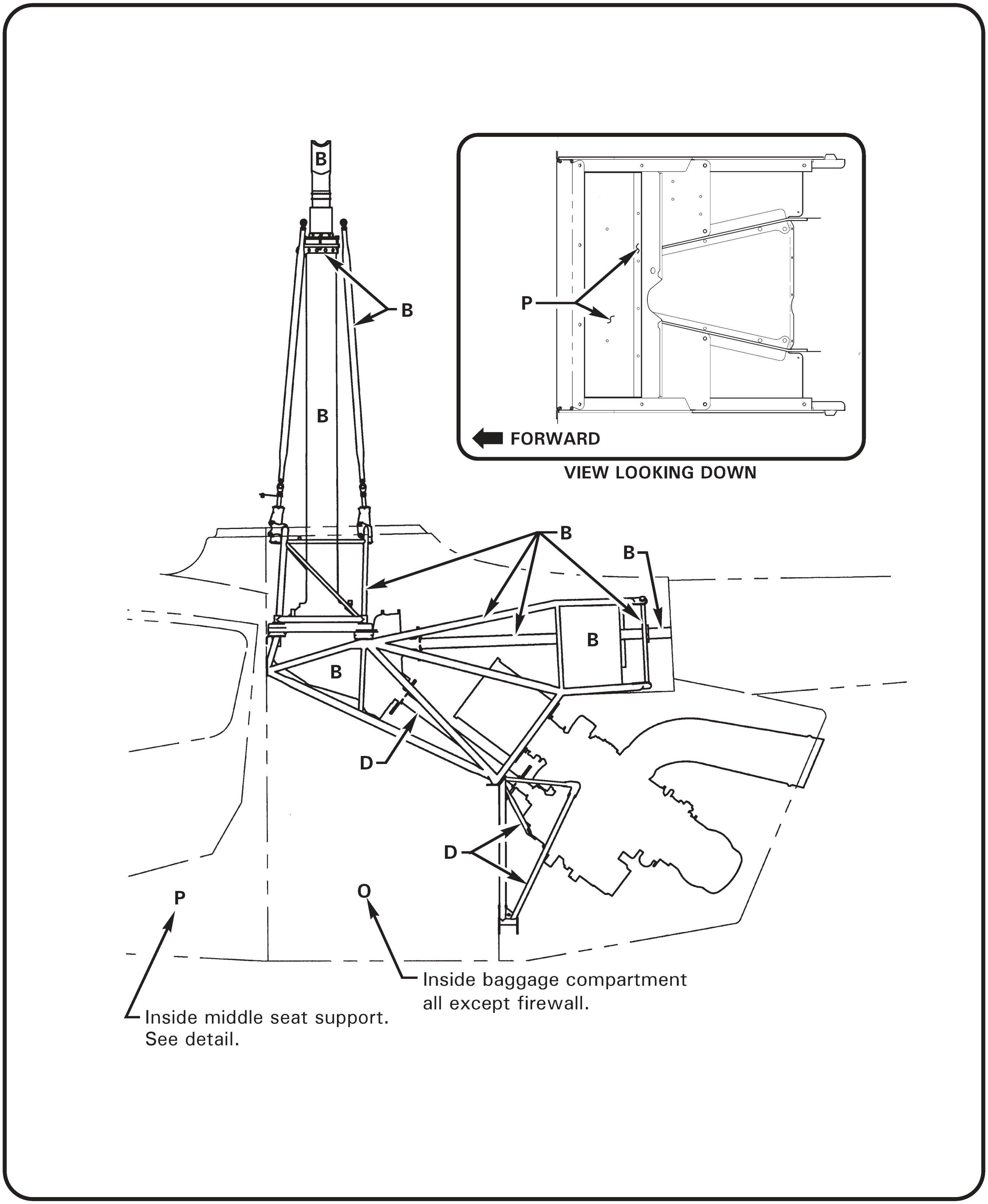

FIGURE 20-4 PAINT CODES

20-78 Lubricants

RHC PART NO.	LUBRICANT TYPE	MANUFACTURER'S PART NO.	MANUFACTURER
A257-1	Grease (general purpose)	101	Southwestern Petroleum Corp. Fort Worth, TX
A257-3	Grease	Aero Shell 14 MIL-G-25537	Shell Oil Co.
A257-4	Oil (automatic transmission fluid)	Dexron II or Dexron II/Mercon or Dexron III/Mercon	Any
A257-6	Grease (fuel resistant)	Fuelube EZ Turn	Fleet Supplies Inc. Cleveland, OH United-Erie Div. of Interstate Chemical Co. Erie, PA
A257-7	Dry film lubricant	Lubri-Kote Type A 1040 CR	Mealey Ind. Lubricants Cleveland, OH
A257-8	Rubber lubricant	P-80	International Products Corp. Trenton, NJ
A257-9	Anti-seize	Silver Grade	Loctite Corp. Newington, CT
A257-12	Grease	MobilGrease 28 MIL-PRF-81322	Exxon Mobil Corp.,
A257-15	Hydraulic fluid	Per MIL-PRF-5606	Any
A257-17	Substitute A257-19		
A257-18	O-ring lubricant	55	Dow Corning Corp. Midland, MI
A257-19	Valve lubricant and sealant compound	111	Dow Corning Corp. Midland, MI
A257-20	Pag oil	3420025-049 (Daphne Hermetic PR) or 3420025-067 (Nissan Type R)	Idemitsu Lubricants America Southfield, MI
A257-21	Petrolatum lubricant	P-16	Panef Corp. Milwaukee, WI
A257-22	Gear oil synthetic	Mobil SHC 629	Exxon Mobil Corp.
A257-23	Turbine oil	Per AS5780 Class HPC	Any

20-79 Adhesives and Sealants

RHC PART NO.	DESCRIPTION	COLOR	MFR. PART NO.	MANUFACTURER
B270-1	Sealant – manganese-cured, fuel resistant (2-part)	Gray	AC-730 B-*	3M Co. St. Paul, MN
B270-2	Substitute B270-1			
B270-4	Substitute B270-13			
B270-5	Sealant - synthetic rubber putty (1-part)	White Light Gray	Q4-2805 94-031	Dow Corning Corp. Midland, MI
B270-6	Sealant & lubricant - thread (1-part)	Gray	80631, 80632, 80633	Permatex, Inc. Solon, OH
			Titeseal 55	Radiator Spec. Co. Charlotte, NC
B270-7	Substitute B270-14			
B270-8	Adhesive - rubber, nitrile/acetone (1-part)	Tan	C 160	Stabond Corp. Gardena, CA
		Dark Brown	847	3M Co. St. Paul, MN
B270-9	Adhesive - epoxy, structural, flexible (2-part)	Gray	2216 B/A	3M Co. St. Paul, MN
B270-10	Adhesive/sealant - threadlocker, anaerobic, tight-fits (1-part)	Red	271	Henkel Loctite Corp. Rocky Hill, CT
B270-11	Adhesive/sealant - threadlocker, anaerobic, loose-fits (1-part)	Red	277	Henkel Loctite Corp. Rocky Hill, CT
B270-12	Sealant - electrical potting (2-part)	Any color except red	MIL-PRF-8516 Type II, Class 2, Category A or B	Any
B270-13	Sealant - silicone rubber, noncorrosive (1-part)	Translu-cent	3145	Dow Corning Corp. Midland, MI
B270-14	Substitute B270-8			
B270-15	Adhesive - plastic, for vinyl (1-part)	Clear	2262	3M Co. St. Paul, MN
B270-16	Substitute B270-14			
B270-17	Adhesive - cyanoacrylate, instant (1-part)	Clear	Super Bonder 495	Henkel Loctite Corp. Rocky Hill, CT
B270-18	Adhesive - weather strip (1-part)	Black	051135-08008	3M Co. St. Paul, MN
B270-19	Adhesive - epoxy structural, rigid (2-part)	Green	1838 B/A	3M Co. St. Paul, MN
B270-20	Adhesive/sealant - threadlocker, anaerobic, non-permanent (1-part)	Purple	222 or 222MS	Henkel Loctite Corp. Rocky Hill, CT

20-79 Adhesives and Sealants (continued)

RHC PART NO.	DESCRIPTION	COLOR	MFR. PART NO.	MANUFACTURER
B270-21	Protectant – corrosion, non-drying (1-part)	Amber	Max Wax	Corrosion Technologies Corp. Garland, TX
		Lt. Amber	LPS 3	LPS Laboratories, Inc. Tucker, GA
B270-22	Substitute B270-21			
	Protectant – corrosion, drying (1-part)	Amber	LPS Hardcoat	LPS Laboratories, Inc. Tucker, GA
B270-23	Sealant – gasket (1-part)	Purple	515	Henkel Loctite Corp. Rocky Hill, CT
B270-24	Activator/Primer – Anaerobic adhesive (1-part)	Translucent Green	7649	Henkel Loctite Corp. Rocky Hill, CT
B270-25	Clear Coat – automotive touch up, brush in bottle (1-part)	Clear	Clear Coat Touch up Bottle	Automotivetouchup Harahan, LA
B270-26	Sealant – Polysulfide, window glazing (2-Part)	Black	AC-251B-1	3M Co. St. Paul, MN
B270-27	Adhesive – Epoxy, High Strength Structural, Flexible (2-part)	Translucent Red Blue	EA 9309NA EA 9309.2NA	Henkel Loctite Corp. Rocky Hill, CT
B270-28	Substitute B270-27			

* Dash number for minimum hours application life may be –½, –2, –6, or –12.

20-80 Storage Limits

1. B283 hoses have a shelf storage life of 5 years. Hose service life is “on condition”, with a maximum of 12 years.
2. Elastic cords have a shelf storage life of 5 years. Elastic cord service life is “on condition”, with a maximum of 12 years. Use invoice or FAA Form 8130 date as start date.
3. Store V-belts at less than 85º F (30º C), with relative humidity below 70%. Avoid solvent and oil vapors, atmospheric contaminants, sunlight, and ozone sources (electric motors, arc welding, ionizing air purifiers, etc.). Belt shelf life is 4 years if preceding recommendations are followed. Use invoice date or FAA Form 8130-3 date as start date.
4. Oils and greases have a 5 year shelf life when stored and kept sealed in their original container. Use invoice date or FAA Form 8130 date as start date unless the manufacturer has marked container with manufacture date (in which case use manufacture date as start date).
5. Rubber o-rings, seals, and gaskets have a (20) quarter, five (5) year shelf life from the indicated cure date. Flourocarbon (Viton) and silicon rubber products shall adhere to manufacturer’s expiration date(s). Service life is “on condition” with a maximum of 12 years.
6. Store uninstalled fuel bladder in original container (if available) at 70°F to 80°F and below 70% humidity. Coat bladder with clean, non-detergent engine mineral oil to prevent rubber from drying out and cracking. Store bladder in relaxed condition free from tension, compression, or other deformation such as creases or folds.

20-90 Miscellaneous Practices

20-91 Part Interchangeability

Refer to R66 Illustrated Parts Catalog for part interchangeability information.

20-92 Thermal Fitting Parts

General Procedures for using heat to fit parts during assembly or evaluating parts that may have been overheated in service:

Aluminum parts must not be heated above 200ºF for more than 5 minutes. Higher temperatures or longer times adversely affect strength and corrosion properties. Scrap any aluminum parts suspected of going above 325ºF regardless of time at temperature.

Steel parts (bare) – Maximum temperature 300ºF. Higher temperature can reduce the strength or cause temper brittleness in some alloys.

Steel parts (cadmium plated) – Maximum temperature 300ºF. Higher temperatures will melt the plating and adversely affect steel strength by a process called liquid metal embrittlement.

Bearings and carburized parts such as gears, clutch shafts, and clutch housings should not be heated above 300ºF. Higher temperatures will reduce the surface hardness and increase wear rates.

Always heat parts in an oven with temperature control set no greater than the maximum temperature allowed for the part.

Always attach a pyrometer and thermocouple to the smallest aluminum part in the oven. Never depend on the oven control to determine part temperature.

Cooling a part for thermal fitting at assembly is not recommended. Water vapor from the air will condense on the part and frequently introduce water into the assembly causing severe internal corrosion over time.

20-93 Replacement Component Identification (Data) Plates

In order to issue a replacement component identification plate for field installation, RHC must first receive the old identification plate in legible condition. If old identification plate is lost or destroyed, then RHC must have an original letter (photocopies or faxes are NOT acceptable) from customer’s Civil Aviation Authority authorizing identification plate replacement AND stating component name, part number, and serial number for each requested identification plate. There is a charge for each plate issued.

Identification plates may be carefully removed using a sharp plastic scraper. If necessary, use a heat gun to soften plate adhesive. Retain in a dry, contaminate-free area until ready for reinstallation.

Damp wipe local area with acetone or equivalent solvent prior to reinstallation. Residual adhesive on identification plate is usually sufficient for good adhesion. If necessary, use B270-9 adhesive or equivalent to secure.

20-94 Crimp Inspection

Refer to Figure 20-5.

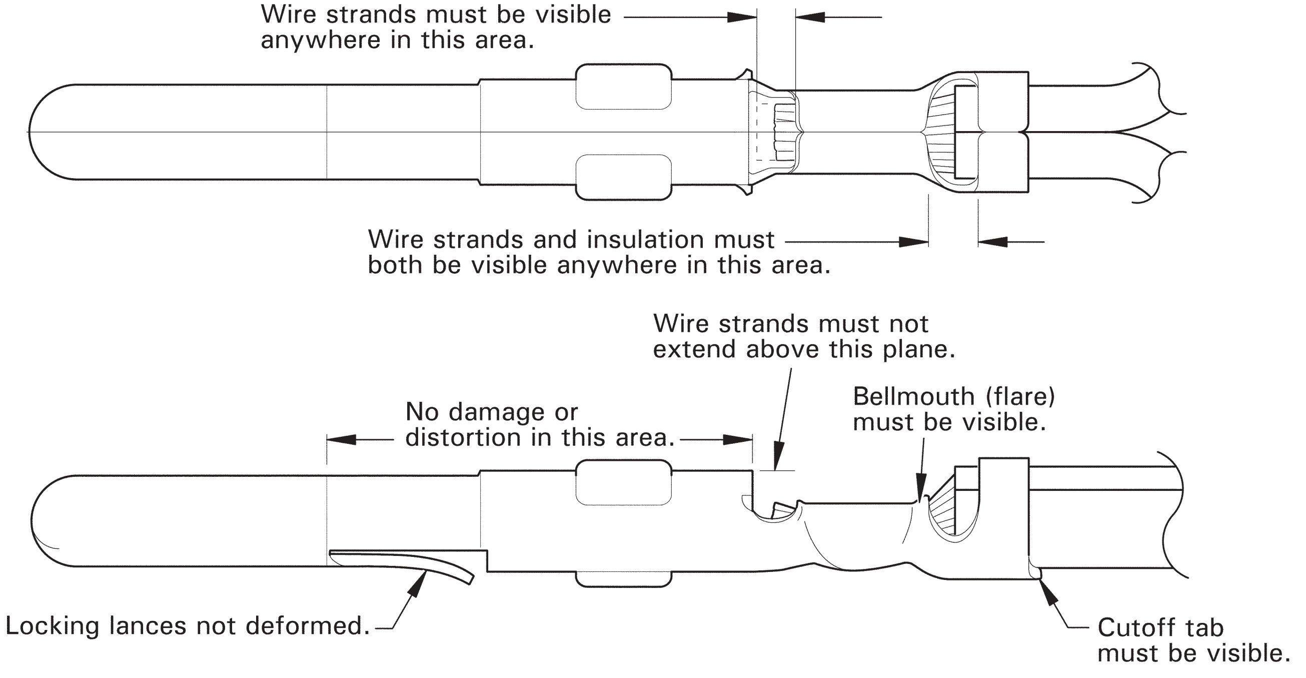

FIGURE 20-5 CRIMP INSPECTION

CHAPTER 21

ENVIRONMENT CONTROL

Section	Title	Page
21-00	Description	21.1
21-10	Ventilation	21.3
21-11	Nose Vent	21.3
21-20	Air Conditioning	21.5
21-21	Compressor Assembly	21.5
21-22	Condenser and Fan Assemblies	21.7
21-23	Evaporator Assembly	21.8
21-24	Troubleshooting	21.9
21-30	Cabin Heat	21.11
21-31	Valve Assembly and Control Rigging	21.11
21-32	Muffler Assembly	21.12
21-33	Diffuser and Tee Assemblies	21.12

Intentionally Blank

CHAPTER 21

ENVIRONMENT CONTROL

21-00 Description

Fresh air vents are located in each door and in the nose. Door vents are opened and closed using the knob near the vent door hinge. A rotating knob is provided to seal and lock vents closed. For maximum ventilation, open door vents wide during hover but only one inch or less during cruise. The rotating knob can be used to hold vents partially open.

See Chapter 52 for door vent maintenance instructions.

The fresh air inlet in the nose is opened by pulling the vent handle on the console face. Rotating the vent handle clockwise will lock its position. Air from the nose inlet is directed along the inside surface of the windshield for defogging as well as for ventilation.

The optional cabin air conditioning system, shown schematically in Figure 21-2, is similar to conventional automotive and light aircraft systems. The system consists of a compressor mounted immediately aft of the main gearbox, a condenser mounted to the vertical firewall in the engine compartment, an evaporator mounted to the front of the center seat support, a blower, an overhead outlet duct, and interconnecting lines and hoses. The system uses R134a refrigerant.

The compressor is belt-driven, by a pulley mounted to the main gearbox tail rotor drive yoke assembly, and is equipped with an electromagnetic clutch. When the system is off, the compressor clutch is disengaged, allowing the compressor pulley to freewheel.

Cooling air for the condenser is supplied via an opening in the belly. The engine cowling air scoop collects the necessary cooling air for the condenser during forward flight. In a hover, electric fans help to draw cooling air through the condenser.

The evaporator blower draws warm cabin air though the evaporator inlet grill and evaporator, where the air is cooled. Cool air is drawn through the blower and blown through ducts under the center seat, up the cabin aft wall, and to the overhead duct.

The system is controlled by a toggle switch on the overhead duct which allows selection of off, low, and high fan settings. The compressor requires main rotor gearbox oil pressure to engage. The compressor is automatically engaged by switching the fan on. A temperature (freeze) switch disengages the compressor when evaporator temperature drops below freezing. Safety (pressure) switches disengage the compressor if excessive refrigerant leakage occurs or if refrigerant pressure is excessive. When the collective is lowered to the full-down position another switch disengages the compressor for 10 seconds to ensure that aircraft performance is not affected. All circuits are protected by the 25 amp A/C circuit breaker; the evaporator blower, the condenser fans, and the compressor clutch circuits are further protected by fuses.

Bleed air from the engine compressor is used for cabin heat. Tubing routes hot air from the engine to outlets forward of the tail rotor pedals and in the rear footwells. A heater control knob located to the left of the cyclic stick actuates a valve in the aft end of the control tunnel through a push-pull cable to control cabin heat. Because the cabin heat uses engine compressor air, some performance degradation occurs with heat ON.

CAUTION

In case of engine fire, cabin heat should be turned off.

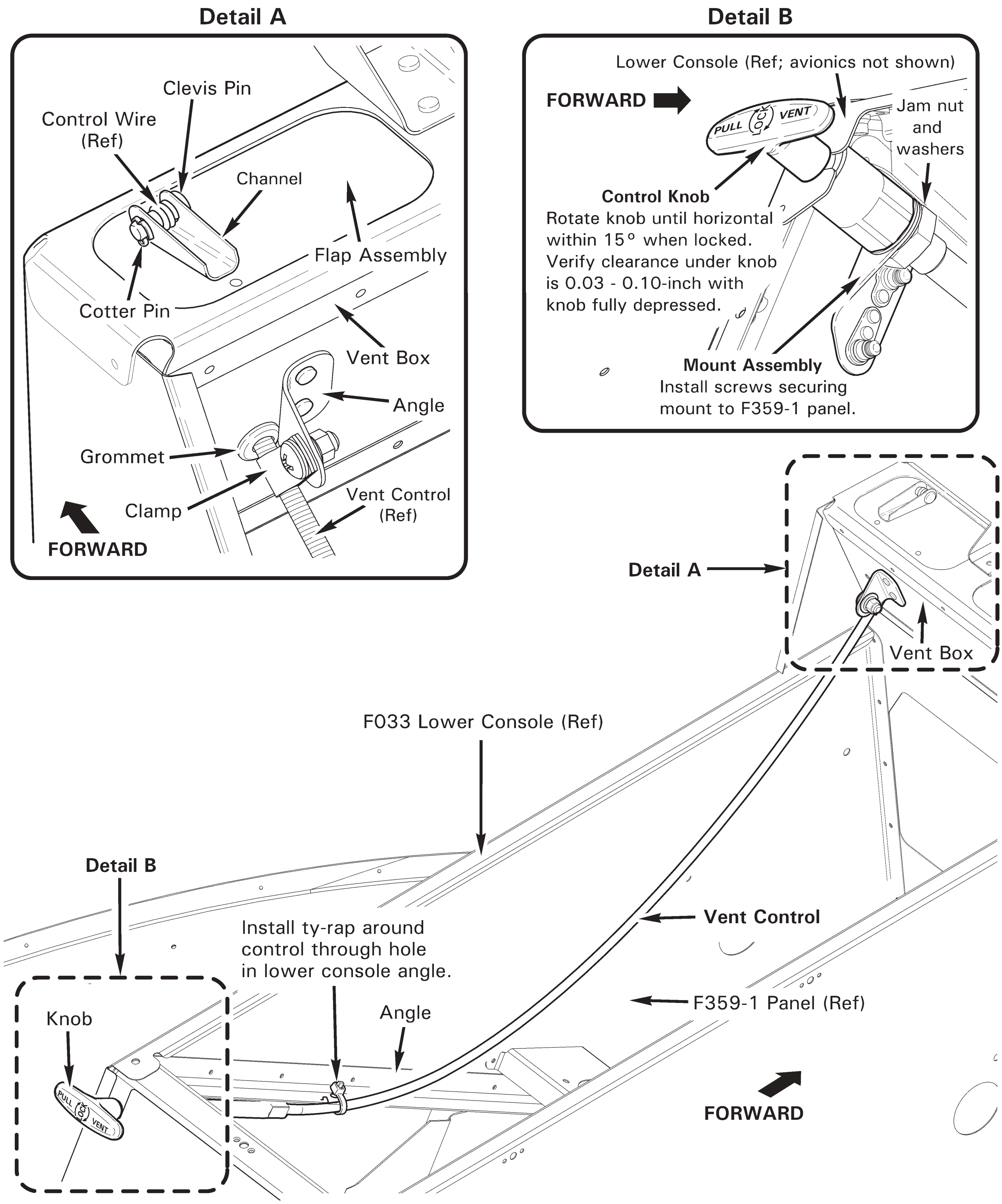

FIGURE 21-1 NOSE VENT

21-10 Ventilation

21-11 Nose Vent

Refer to R66 Illustrated Parts Catalog (IPC) Figures 21-1.

A. Removal

1. Remove hardware securing avionics face to F033-1 lower console and remove face. Unscrew and remove radios. Remove hardware securing radio trays to lower console and remove trays. Disconnect OAT wiring.

2. Refer to Figure 21-1. Remove screws attaching upper console to lower console and hinge console aft. Protect instrument face with foam support or equivalent.

3. Remove and discard cotter pin securing clevis pin and C522-5 (air vent) control inner wire to C062-1 vent box assembly channel. Remove and retain clevis pin.

4. Remove hardware securing AN742-3 clamp and control housing to vent box angle.

5. Cut and discard ty-rap securing control housing to lower console angle.

6. Remove screws securing C365-13 mount assembly to lower console and remove control. As required, remove MS35489-4 grommet and clamp; remove jam nut & lockwashers securing mount assembly to control housing, and remove mount assembly.

B. Installation

1. Refer to Figure 21-1. As required, install C365-12 mount assembly, lockwashers, and jam nut on C522-5 (air vent) control housing, but do not tighten jam nut. Install AN742-3 clamp and (new, as required) MS35489-4 grommet on control housing.

2. Position control in lower console and install screws securing mount assembly to lower console. Verify security.

3. Rotate control knob until horizontal within 15° when locked; tighten jam nut against mount assembly. Verify security.

4. Route control inner wire through C062-1 vent box assembly channel. Adjust grommet position as required, and install clevis pin through channel and control inner wire. Install cotter pin. Verify security.

5. Install clamp and hardware securing clamp and control housing to vent box angle.

6. Install ty-rap around control housing through hole in lower console angle. Cinch ty-rap until snug without over-tightening, and trim tip flush with head.

7. Actuate vent and adjust clamp position as required for proper vent operation. Verify control housing does not slip through clamp when opening and closing vent. Verify clearance under knob is 0.03-0.10 inch with knob fully depressed.

8. Close and secure upper console. Connect OAT wiring. Install radio trays and hardware securing trays to lower console. Verify security. Install and secure radios. Install avionics face and hardware securing face to lower console.

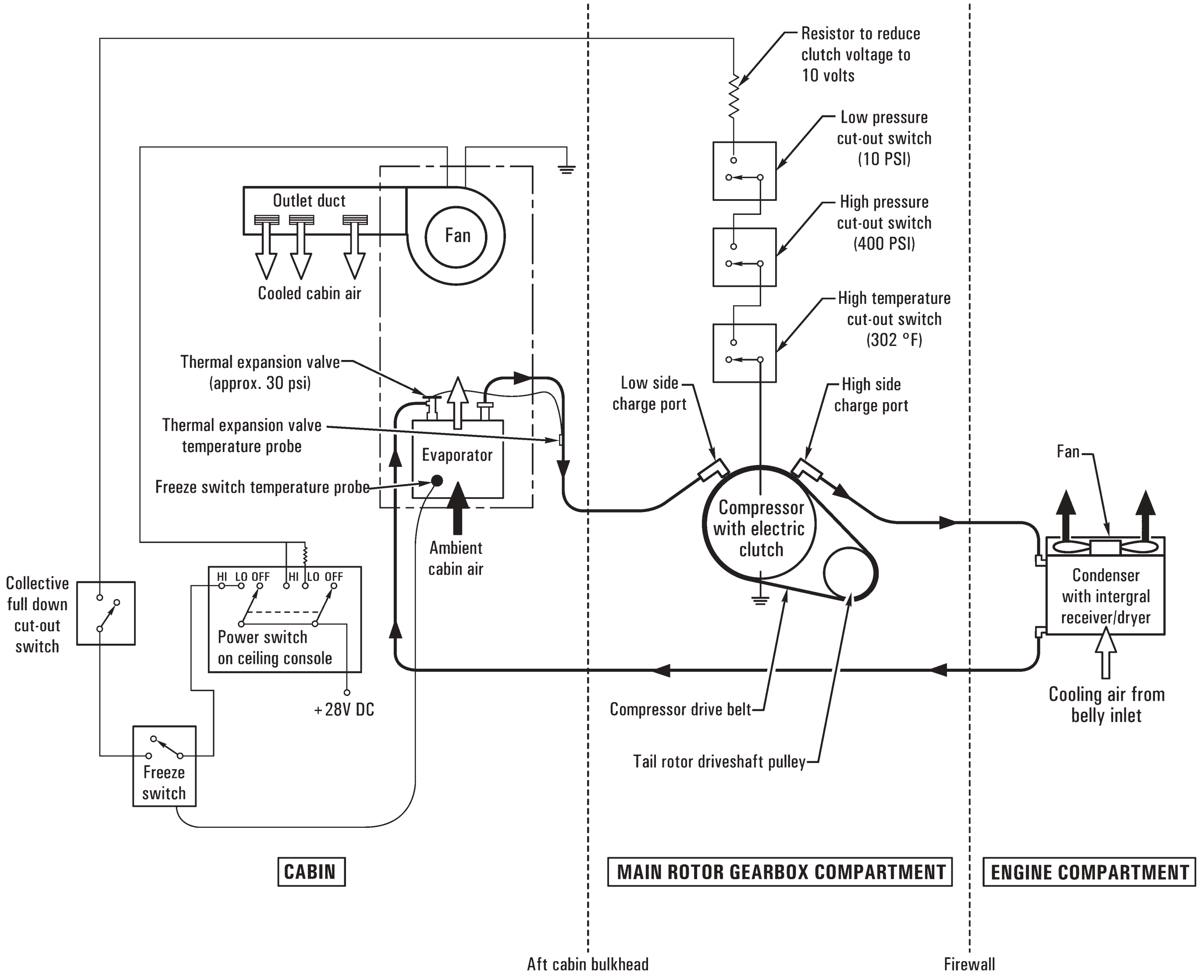

FIGURE 21-2 AIR CONDITIONING SCHEMATIC

21-20 Air Conditioning

21-21 Compressor Assembly

Refer to R66 Illustrated Parts Catalog (IPC) Figure 21-3.

A. Belt Replacement

1. Remove tailcone cowling per § 53-23.
2. Remove hardware securing F196-1 tail rotor drive fan shaft to C947-3 plate assemblies, noting hardware removed.
3. Loosen hardware securing G777-1 compressor assembly to G781-1 arm weldment.

CAUTION

Do not use refrigerant hose assemblies or fittings to rotate compressor. Do not rotate compressor further than necessary, to avoid damaging system wiring and refrigerant hoses or fittings.

4. Rotate compressor down and inboard as required to disengage B173-5 v-belt from pulleys. Route belt around drive shaft flange and remove belt.
5. Route new B173-5 v-belt around drive shaft flange and fit belt onto G779-1 pulley and compressor pulley.
6. Rotate compressor up and outboard to tension belt, then tighten hardware securing compressor to weldment. Adjust belt until 4.5-5.5 lb of force applied mid-span deflects belt 0.16-inch. Standard torque bolts per § 20-32 and torque stripe per Figure 5-1.
7. Install hardware securing drive shaft to plate assemblies, as removed. Standard torque bolts per § 20-32 and torque stripe per Figure 5-1.
8. Install tailcone cowling per § 53-23.

21-21 Compressor Assembly (continued)

B. Removal

1. Remove tailcone cowling per § 53-23.

2. Turn BATTERY switch OFF. Cut and discard ty-raps as required and disconnect compressor assembly wiring from airframe harness at connectors.

3. Recover refrigerant per § 12-81. Remove hardware securing refrigerant hose assemblies to G777-1 compressor assembly. Cap fittings.

4. Remove hardware securing compressor to G781-1 arm weldment and G782-1 mount weldment and remove compressor.

C. Installation

1. Remove G777-1 compressor assembly service port caps and completely drain oil. Using a syringe, service compressor with 120±10 cc A257-20 pag oil into the high pressure port. Install service port caps; verify security.

2. Refer to § 5-45. Inspect B173-5 v-belt condition and replace as required. Fit belt around G779-1 pulley and compressor pulley, and install hardware securing compressor to G782-1 mount weldment. Standard torque bolts per § 20-32.

3. Install hardware securing compressor to G781-1 arm weldment. Rotate compressor up and outboard to tension belt, then tighten hardware securing compressor to weldment. Adjust belt until 4.5-5.5 lb of force applied mid-span deflects belt 0.16-inch. Standard torque bolts per § 20-32, and torque stripe all compressor mounting hardware per Figure 5-1.

4. Remove caps and install refrigerant hose assemblies and hardware securing hoses to compressor. Special torque screws per § 20-33 and torque stripe per Figure 5-1.

5. Connect compressor assembly wiring to airframe harness at connectors and install ty-raps as required. Cinch ty-raps until snug without over-tightening, and trim tips flush with heads.

6. Perform leak detection per § 12-83.

7. Charge system with refrigerant per § 12-82.

8. Install tailcone cowling per § 53-23.

21-22 Condenser and Fan Assemblies

Refer to R66 Illustrated Parts Catalog (IPC) Figure 21-7.

A. Removal

1. Recover refrigerant per Section 12-82.
2. Remove engine cowling per Section 53-21.
3. Turn BATTERY switch OFF. Cut and discard ty-raps as required and disconnect G780-1 fan assembly wiring from airframe harness at connectors.
4. Remove hardware securing G786-1 box assembly to G783-1 condenser.
5. Using backup wrench, disconnect G810-1 and G811-1 line assembly b-nuts from condenser fittings.
6. Supporting condenser, remove hardware securing condenser to G787 support assemblies. Taking care not to damage line assemblies and condenser fittings, carefully remove condenser. Cap fittings.

B. Installation

1. Remove caps. Install hardware securing G783-1 condenser to G787 support assemblies. Verify security.
2. Connect G810-1 and G811-1 line assembly b-nuts to condenser fittings. Using backup wrench, special torque b-nuts per Section 20-33, and torque stripe per Figure 5-1.
3. Install hardware securing G786-1 box assembly to condenser. Verify security.
4. Connect G780-1 fan assembly wiring to airframe harness at connectors and install ty-raps as required. Cinch ty-raps until snug without over-tightening, and trim tips flush with heads.
5. Perform leak detection per Section 12-83.
6. Charge system with refrigerant per Section 12-82.
7. Install engine cowling per Section 53-21.

21-23 Evaporator Assembly

Refer to R66 Illustrated Parts Catalog (IPC) Figure 21-11.

A. Removal

1. Recover refrigerant per Section 12-82.
2. Refer to Section 6-70. Detach F931-1 seat assembly (secured via hook and loop tape) from F474-1 cover assembly and remove seat. Remove hardware securing cover assembly and F380-8 angle to F377-1 middle seat assembly; remove cover and angle.
3. Cut and discard ty-raps as required and disconnect D799-7 (freeze) switch assembly wiring from airframe harness at connector.
4. Remove screws securing G798-1 cover assembly to seat assembly. Remove hardware securing G784-1 evaporator assembly and switch to seat assembly.
5. Using backup wrench, disconnect D795-8 line assembly and evaporator line b-nuts from G794 hose assemblies.
6. Remove aluminum tape securing F380-7 cover to middle seat (if installed). Detach grommet from seat assembly and carefully remove evaporator and attached components forward through seat assembly vertical wall relief. Cap fittings.

B. Installation

1. Remove caps. Position G784-1 evaporator assembly and associated components in F377-1 middle seat assembly. Install screws securing evaporator and D799-7 (freeze) switch assembly to seat assembly. Install screws securing G798-1 cover assembly to seat assembly.
2. Connect D795-8 line assembly and evaporator line b-nuts to G794 hose assemblies. Using backup wrench, special torque hose b-nuts per Section 20-33, and torque stripe per Figure 5-1.
3. Connect freeze switch wiring to airframe harness at connector and install ty-raps as required. Cinch ty-raps until snug without over-tightening, and trim tips flush with heads.
4. Perform leak detection per Section 12-83.
5. Charge system with refrigerant per Section 12-82.
6. Install screws securing F474-1 cover assembly and F380-8 angle to middle seat. Attach F931-1 seat assembly (secured via hook and loop tape) to cover.

21-24 Troubleshooting

1. If air exiting overhead duct is not cold:

POSSIBLE CAUSE	TROUBLESHOOT/CORRECTIVE ACTION
Low Refrigerant Charge/ Refrigerant Leak	Recover refrigerant per § 12-82. System should operate normally on approximately 2.5 lb refrigerant. If less than 2.5 refrigerant is recovered, perform leak detection per § 12-83, repair leaks if any, and charge system with refrigerant per § 12-82.
Switch or Wiring Problem Interrupting Compressor Power	With aircraft not running, temporarily connect a jumper from ground to wire 1898 at main gearbox oil pressure switch. Raise collective to full-up position. Turn on Master switch and A/C switch on overhead duct (low or high setting ok). Have observer listen to and observe compressor clutch through cowl door. Clutch should engage (click and snap against pulley) whenever A/C is switched on. Remove temporary jumper. Check wiring at freeze switch (refer to § 21-23), high and low pressure switches (near compressor assembly), and full-down collective switch. Repair any damaged wiring or connectors. Check continuity through each switch. All switches should be closed with a properly charged system and aircraft at rest on ground. Replace any defective switch.
Failed Compressor V-Belt	Inspect belt. Replace belt per § 21-21 as required.
Insufficient Condenser Airflow	Inspect condenser installation. Verify no blockage and all seals in place. Remove blockage and/or repair seals to ensure airflow through core.
Extreme Environmental Conditions	Extreme temperature and humidity may result in cooling effect less than a typical automobile. No corrective action available.

2. If excessive condensation is found near evaporator assembly:

POSSIBLE CAUSE	TROUBLESHOOT/CORRECTIVE ACTION
Blocked or Kinked Evaporator Drain	Verify system is draining normally. After several minutes ground run in humid conditions with A/C on, water should be seen draining from the drain tube. If water drainage is not observed, inspect drain line (refer to § 5-45). Correct any damaged or kinked lines. Clean sediment trap as required. Verify proper function of check ball.
Extreme Humidity	Some condensation is unavoidable in extreme humidity. Ensure all fresh air vents closed. Limit opening and closing cabin doors as much as practical to limit humidity entering cabin.

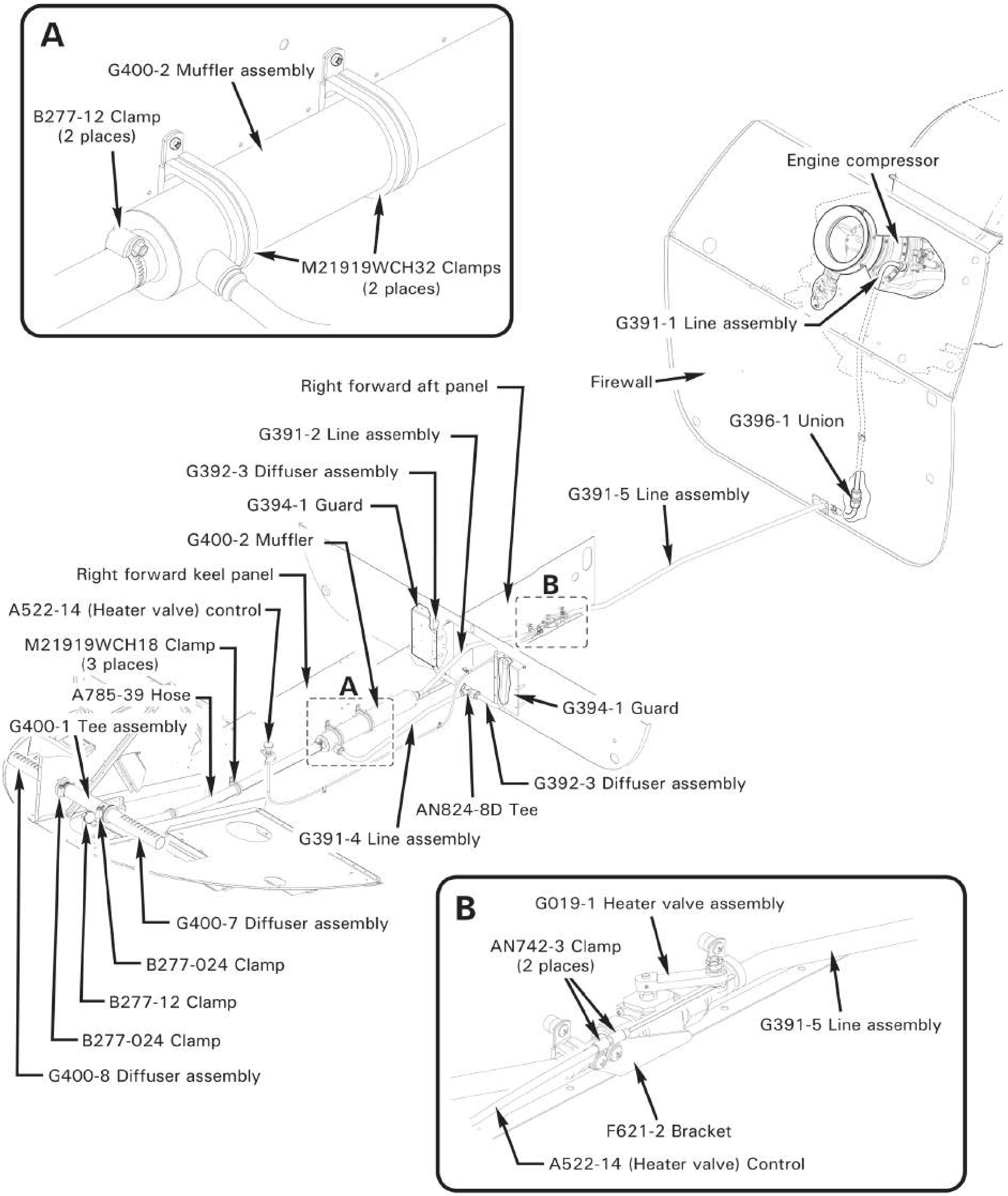

FIGURE 21-3 CABIN HEAT

21-30 Cabin Heat

21-31 Valve Assembly and Control Rigging

Refer to R66 Illustrated Parts Catalog (IPC) Figures 21-31 and 21-35.

A. Removal

1. Refer to Section 6-70. Remove hardware securing F794-1 and F794-2 (belly cover) panels and remove panels. Remove engine cowling per Section 53-21.
2. Refer to Figure 21-3. Remove hardware securing A522-14 (heater valve) control inner wire to G019-1 (heater) valve assembly arm.
3. Remove hardware securing AN742-3 clamps and control housing to F621-2 bracket.
4. Hinge aft right seat forward. Remove clamps, spacers, and hardware securing G391-2 and G391-5 line assemblies to aft right keel panel. Hinge seat back.
5. Loosen line assembly B-nuts from G400-2 muffler assembly & G396-1 union; disconnect lines from valve assembly fittings and remove valve. Plug lines & cap fittings.

B. Installation

1. Refer to Figure 21-3. Remove caps and plugs, install G019-1 (heater) valve assembly and connect G391-2 and G391-5 line assembly B-nuts to valve assembly fittings. Hand-tighten B-nuts at valve assembly, G400-2 muffler assembly, and G396-1 union, but do not torque.
2. Hinge aft right seat forward. Install clamps, spacers, and hardware securing line assemblies to aft right keel panel. Verify security. Hinge seat back.
3. Position valve assembly so F621-2 bracket is vertical within 5°; special torque line assembly B-nuts at valve assembly, muffler assembly, and union, and torque stripe per Figure 5-1.
4. Perform control rigging per Part C, steps 3 thru 6.
5. Install engine cowling per Section 53-21.

C. Control Rigging

1. Refer to Section 6-70. Remove hardware securing F794-1 and F794-2 (belly cover) panels and remove panels.
2. Refer to Figure 21-3. Remove palnut and loosen nut securing A462-4 fitting and A522-14 (heater valve) control inner wire to G019-1 (heater) valve assembly arm.
3. As required, loosen hardware securing AN742-3 clamps and control housing to F621-2 bracket. Position end of control housing flush-0.25 inch at or beyond edge of aft clamp and install fasteners. Verify security.
4. Refer to detail in Figure 76-3. Push heater valve knob ON then pull up slightly to create 0.03-0.10 inch clearance under knob. Position valve assembly arm in full open detent. Verify sufficient inner wire beyond aft edge of fitting and special torque fitting nut per Section 20-33.
5. Install fitting palnut, standard torque per Section 20-32, and torque stripe per Figure 5-1. Trim control wire 0.10-0.30 inch beyond aft edge of fitting.
6. Install (belly cover) panels, and install hardware. Verify security.

21-32 Muffler Assembly

Refer to R66 Illustrated Parts Catalog (IPC) Figure 21-35.

A. Removal

1. Refer to Section 6-70. Remove hardware securing F794-1 and F794-2 (belly cover) panels and remove panels.
2. Refer to Figure 21-3. Loosen B277-12 clamp and pull A785-39 hose off of G400-2 muffler assembly. Install temporary covers on muffler and hose openings.
3. Loosen G391-4 line assembly B-nut at AN824-8D tee; disconnect G391-2 and -4 line assemblies from muffler.
4. Remove hardware securing MS21919WCH32 clamps and muffler to forward right keel panel and remove muffler. Plug & cap fittings. As required, remove clamps from muffler.

B. Installation

1. Refer to Figure 21-3. As required, install MS21919WCH32 clamps on G400-2 muffler assembly. Install hardware securing clamps and muffler to forward right keel panel. Verify security.
2. Remove caps and plugs and connect G341-2 and G341-4 line assembly B-nuts to muffler assembly fittings. Special torque B-nuts at AN824-8D tee and muffler assembly, and torque stripe per Figure 5-1.
3. Remove temporary covers and slide B277-12 clamp and A785-39 hose onto muffler assembly and tighten clamp. Verify security.
4. Install (belly cover) panels, and install hardware. Verify security.

21-33 Diffuser and Tee Assemblies

Refer to R66 Illustrated Parts Catalog (IPC) Figure 21-33.

A. Forward Diffuser and Tee Assembly Removal

1. Refer to Figure 21-3. Remove screws attaching upper console to lower console and hinge console aft. Protect instrument face with foam support or equivalent.
2. Loosen two B277-24 clamps securing G400-1 tee assembly collars to G400-7 and G400-8 diffuser assemblies. Slide diffusers outboard from tee and lower console assembly.
3. Loosen B277-12 clamp securing A785-39 hose to tee assembly can weldment and pull hose and clamp off of can.
4. Remove hardware securing MS21919WCH16 clamp and tee assembly to angle and remove tee. As required, remove clamps from tee.

21-33 Diffuser and Tee Assemblies (continued)

B. Forward Diffuser and Tee Assembly Installation

1. Refer to Figure 21-3. As required, install MS21919WCH16 and (two) B277-24 clamps on G400-1 tee assembly. Install tee with clamps, and install hardware securing MS21919WCH16 clamp and tee to angle.

2. Insert G400-7 and G400-8 diffuser assemblies through lower console and into tee assembly. Orient diffuser holes vertically within 5°, and tighten clamps (against spacers) securing tee assembly collars to diffusers. Verify security.

3. Slide A785-39 hose and B277-12 clamp onto tee assembly can weldment and tighten clamp. Verify security.

4. Close and secure upper console.

C. Aft Diffuser Assemblies and Tee Removal

1. Refer to Section 6-70. Remove hardware securing F794-1 (belly cover) forward panel and remove panel.

2. Refer to Figure 21-3. Hinge aft right and left seats forward. Remove hardware securing G394-1 guards and G392-3 diffuser assemblies to aft seat assemblies and remove guards. Hinge seats back.

3. Disconnect diffuser assembly B-nuts from AN824-8D tee and remove diffusers. As required, disconnect G391-4 line assembly B-nut from tee and remove tee. Cap fittings.

D. Aft Diffuser Assemblies and Tee Installation

1. Refer to Figure 21-3. As required, remove caps, install AN824-8D tee, and connect G391-4 line assembly B-nut, but do not torque.

2. Remove caps and install G392-3 diffuser assemblies; connect diffuser assembly B-nuts to tee, but do not torque. Hinge aft right and left seats forward and install hardware securing diffusers to aft seat assemblies. Special torque line assembly and diffuser B-nuts per Section 20-33, and torque stripe per Figure 5-1.

3. Install G394-1 guards and hardware securing guards to aft seat assemblies. Verify security. Hinge seats back.

4. Install (belly cover) panel, and install hardware. Verify security.

Intentionally Blank

CHAPTER 22

AUTOPILOT

Section	Title	Page
22-00	Description	22.1
22-10	(Pitch) Servo Assembly	22.7
22-20	(Roll) Servo Assembly	22.8
22-30	Flight Control Computer (FCC)	22.9
22-40	Control Panel	22.10
22-50	Cyclic Grip Assembly	22.11
22-60	Maintenance	22.12
22-61	Ground Checks	22.12
22-62	Troubleshooting	22.14

Intentionally Blank

CHAPTER 22

AUTOPILOT

22-00 Description

The HeliSAS autopilot system consists of two electric servomotors, a flight control computer, an autopilot control panel, and control buttons on the cyclic grip. One servomotor controls pitch and is installed in the control tunnel forward of the cyclic stick. The other servomotor controls roll and is installed under the pilot's seat. The servomotors are connected to the cyclic through electromagnetic clutches.

The flight control computer is installed on the forward panel under the pilot's seat, and the autopilot control panel is installed in the avionics stack.

The autopilot senses aircraft attitude using a combination of sensors in the flight control computer and an independent onboard attitude source such as the Attitude Heading Reference System (AHRS) for the Primary Flight Display (PFD). The computer then sends signals to the servomotors which are connected to the bottom of the cyclic in the control tunnel.

The primary autopilot mode is Stability Augmentation System (SAS) mode which maintains a steady helicopter attitude by applying corrective inputs to the cyclic. This is felt as a light cyclic centering force. Additional modes may be layered on top of SAS mode and are described below. The pilot can override as desired for maneuvering without disengaging the system. Only a few pounds of force at the cyclic are required for override, and the system will not disconnect due to pilot cyclic inputs.

The control panel has a row of buttons to control autopilot modes and annunciators to indicate mode status. A dark annunciator indicates that a mode is off, a white annunciator indicates that a mode is armed or on standby, and a green annunciator indicates that a mode is active.

When the avionics master is switched on, the autopilot performs a self-test and then enters SAS standby mode. All of the control panel indicators flash alternating white and green during the self-test. Four headset beeps occur at the beginning of the self-test as a check of the aural warning function. The SAS annunciator on the control panel turns steady white when the self-test is complete.

> NOTE
>
> Autopilot will not enter standby mode if attitude indicator is not functioning or indicated bank angle is greater than 6 degrees.

The autopilot SAS mode is engaged either by pressing the SAS button on the control panel or by pressing the TRIM button on the cyclic for more than 1.25 seconds. Additional modes are engaged by pressing the appropriate button on the control panel. The additional modes are disabled and will not engage at airspeeds below 44 KIAS or above 140 KIAS.

22-00 Description (continued)

To disengage any mode, push the appropriate button on the control panel.

> NOTE
>
> Disengaging SAS mode will also disengage all other modes.

Modes may also be disengaged using the AP OFF button on the cyclic. If only SAS mode is engaged, push the AP OFF button once to disengage. If additional modes are engaged, push the AP OFF button once to disengage all modes except SAS and a second time to disengage SAS mode, or push and hold the AP OFF button to disengage all modes including SAS.

> NOTE
>
> SAS disengagement should always be accompanied by four beeps in the headset. If beeps do not occur, maintenance is required.

Safety monitors automatically disengage individual modes or the entire system if a fault is detected. Automatic disengagement of SAS mode (or the entire system) is indicated by four beeps in the headset. Automatic disengagement of any mode other than SAS is indicated by a single beep in the headset. There is no audio indication for intentional disengagement of modes other than SAS.

> NOTE
>
> The system also automatically reverts to SAS mode at airspeeds below 44 KIAS or above 140 KIAS, accompanied by a single beep. The high speed limit is not intended to provide V_{ne} protection. It is the pilot's responsibility to observe V_{ne} limits.

The TRIM button is used to re-set the target attitude (to re-trim) while in SAS mode. Use a small amount of force to override the autopilot and then push and release the TRIM button at the new desired condition. If the force to override is objectionable, the TRIM button may be held down during maneuvers. The system will re-trim to the attitude at which the TRIM button is released. For Version 52, stick forces felt during override will gradually wash out to near zero without use of TRIM button if override is maintained.

> NOTE
>
> The system will not re-trim to angles more than approximately 10° in pitch or roll.

22-00 Description (continued)

> NOTE
>
> When engaging SAS mode from standby, for angles of less than approximately 10° in pitch and roll, SAS holds the current angles. If either pitch or roll is larger than approximately 10°, the system assumes an unusual attitude and gently levels the helicopter.

The autopilot is protected by a dedicated circuit breaker on the avionics bus (autopilot is not powered with the avionics master switch off).

Heading Mode (HDG) – maintains the heading selected by the heading bug on the directional gyro or Horizontal Situation Indicator (HSI) display. Aircraft can be steered using the heading bug.

Altitude Mode (ALT) – maintains altitude at the time of engagement or of last TRIM button release. The target altitude is reset each time the TRIM button is pressed and released.

> NOTE
>
> The autopilot uses pitch attitude to maintain altitude or follow an approach glidepath. It does not have any control of power setting. The pilot must manage power with the collective to control speed and rate of climb or descent. Make small, smooth power changes to allow the system to adjust to new power settings.

Navigation Mode (NAV) – tracks the active GPS or VLOC course displayed on the Course Deviation Indicator (CDI). If no CDI is installed, NAV will only track the active GPS course displayed on the GPS.

NAV may be armed prior to intercepting the active course. NAV annunciator is white when NAV is armed and turns green at course intercept. If HDG is active when NAV is armed, the autopilot will fly the selected heading until course intercept. If HDG is not active, the autopilot will select a 45° intercept angle.

22-00 Description (continued)

Vertical Navigation Mode (VRT) – tracks an ILS glideslope or GPS approach vertical guidance. Arm VRT (annunciator turns white when armed) prior to intercepting the glidepath. VRT annunciator will turn green at glidepath intercept.

> NOTE
>
> Pushing the ALT button while VRT is armed or active will turn off VRT. VRT must be re-armed or re-engaged as desired.

> NOTE
>
> Reducing power to approach setting just prior to glidepath intercept is recommended.

Speed Mode (SPD) (Version 52 only)

Speed mode uses cyclic pitch to control airspeed. Exact behavior varies with configuration of airspeed and altitude bugs on the PFD as described below.

The altitude bug is displayed above the altitude tape and the airspeed bug is displayed above the airspeed tape. The appearance of all dashes or a blank field indicates a bug is not set.

If an airspeed bug is not set, selecting SPD holds the current airspeed. The target speed is reset each time the trim button is pressed and released.

If an airspeed bug is set, selecting SPD holds airspeed at the bug setting. Changing the bug will change the target airspeed.

If an altitude bug is set, selecting SPD will also arm ALT (ALT LED white) for altitude capture. The mode will switch from SPD to ALT if the selected altitude is crossed. There will be a brief period in capture mode with the ALT LED flashing white/green.

> NOTE
>
> Do not change the selected altitude during ALT capture (ALT LED flashing white/green). System may pitch up or down to chase bug and may not capture altitude.

> NOTE
>
> Different brands of PFD behave differently in terms of bug settings at power up and how bugs are manually set. Refer to PFD manufacturer's documents for proper use. Verify desired bug settings before engaging SPD mode.

22-00 Description (continued)

Backcourse Mode (BC) (Version 51 only) – reverse CDI sensing for backcourse approaches. Course on HSI should be set so that tail of course pointer points toward runway (set to inbound front course).

Airspeed Protection (Version 52 only) – Minimizes the possibility of the ALT mode to fly the helicopter to an airspeed below 44 KIAS due to insufficient power, or the VRT mode to fly the helicopter to an airspeed above 140 KIAS due to excess power when flying a precision approach glideslope. When triggered, it causes the longitudinal mode to change from ALT (at low airspeed) or VRT (at high airspeed) to SAS mode with a commanded pitch attitude of 2 degrees nose down. Since the mode change is not commanded by the pilot, a single warning beep is annunciated.

A. Removable Flight Controls

On later aircraft, disconnect the electrical connector for the left-hand trim button located near the quick release pin before removing the left cyclic grip. Reconnect the connector when installing the left cyclic grip.

B. Schematic

Refer to Figures 98-8A & 98-8B for D325-1 autopilot (HeliSAS) electrical schematic.

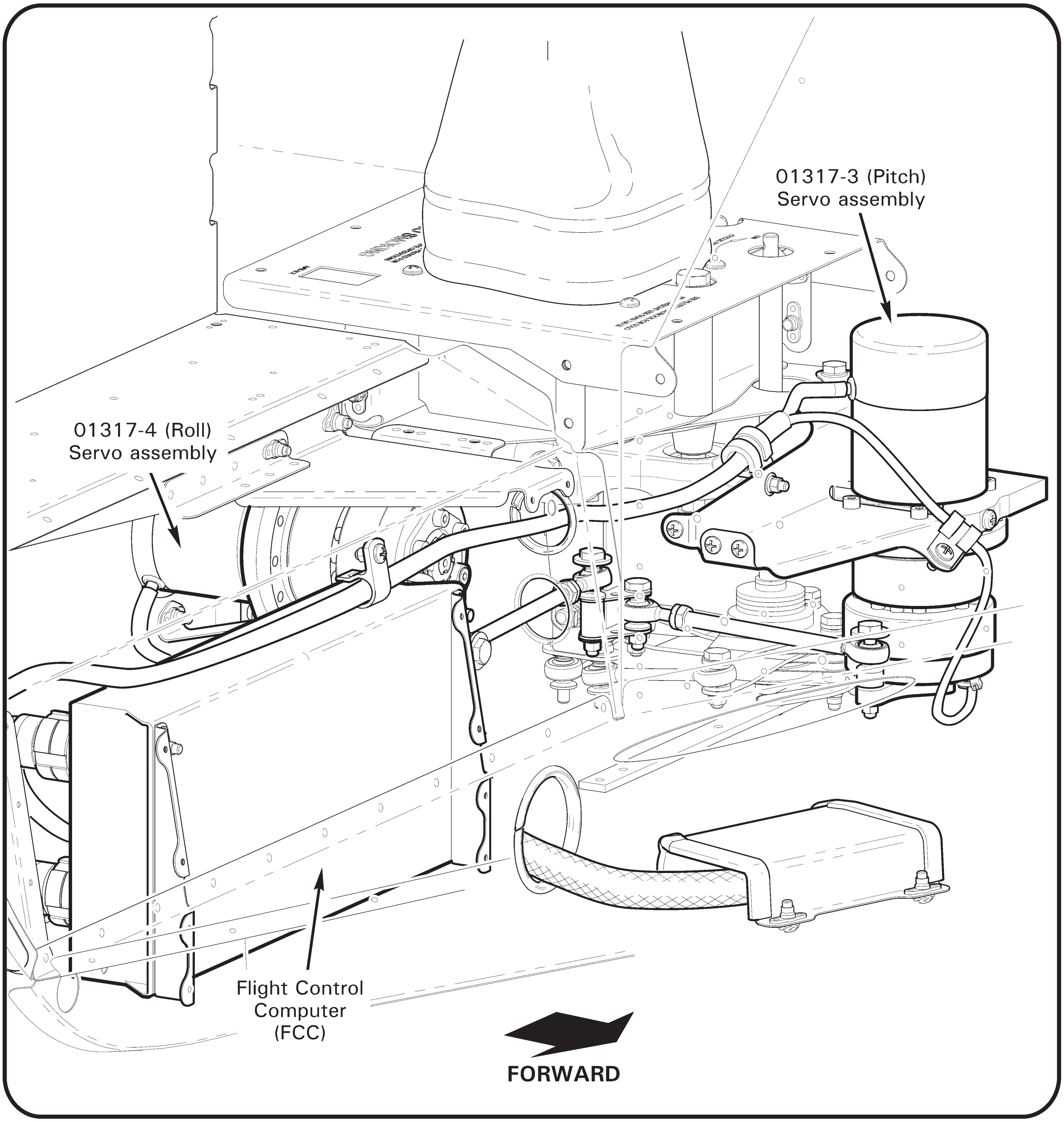

FIGURE 22-1 HELISAS AUTOPILOT SYSTEM

22-10 (Pitch) Servo Assembly

A. Removal

1. Turn battery & avionics switches off and pull out AUTOPILOT (5 amp) circuit breaker at panel.
2. Remove F680-3 and F445 collective covers and F444-1 cyclic cover. Hinge front right seat forward. Remove G702 cover assembly under pilot's seat.
3. Remove avionics and avionics trays as required from lower console.

CAUTION

For pitch servo, adjust length of A336-8 push-pull tube assembly to 4.20 ± 0.03 inches between rod end centers.

4. Position cyclic stick full aft and apply cyclic friction. Remove hardware (and C130-50 spacer) securing 01317-3 (pitch) servo assembly arm to A336-8 push-pull tube's rod end.
5. Disconnect servo harness from flight control computer's J1 PITCH receptacle. Cut and discard ty-rap(s) securing harness to M23190/1-2 clamp(s) and pull harness through access holes into control tunnel.
6. Support servo and remove hardware securing servo's brace to cyclic box and keel panels. Carefully remove servo from control tunnel.

B. Installation

1. Turn battery & avionics switches off and pull out AUTOPILOT (5 amp) circuit breaker at panel. Position cyclic stick full aft and apply cyclic friction.
2. Position 01317-3 (pitch) servo assembly in control tunnel and install hardware securing servo's brace to cyclic box. Standard torque bolts per § 20-32 and torque stripe per Figure 5-1. Install screws securing brace to keel panels. Verify security.
3. Route servo harness through access holes and connect harness to flight control computer's J1 PITCH receptacle. Install ty-rap(s) securing harness to M23190/1-2 clamp(s). Cinch ty-raps until snug without over-tightening, and trim tips flush with heads. Verify harness security.
4. Install hardware (and C130-50 spacer) securing servo arm to A336-8 push-pull tube's rod end. Standard torque bolt per § 20-32 and torque stripe per Figure 5-1. Verify security.
5. Verify length of A336-8 push-pull tube assembly connected to pitch servo is 4.20 ± 0.03 inches between rod end centers.
6. Verify freedom of flight controls through full travel with and without friction applied.
7. Install avionics trays and avionics if removed. Verify security.
8. Push in AUTOPILOT circuit breaker (5 amp) at panel. Perform ground checks as appropriate per § 22-61.
9. Install G702 cover assembly under pilot's seat. Install F444-1 cyclic cover, and F445 and F680-3 collective covers. Verify security.

22-20 (Roll) Servo Assembly

A. Removal

1. Turn battery & avionics switches off and pull out AUTOPILOT (5 amp) circuit breaker at panel.
2. Remove F680-3 and F445 collective covers. Remove G702 cover assembly under pilot's seat.

> **CAUTION**
>
> For roll servo, adjust length of A336-8 push-pull tube assembly to 4.30 ± 0.03 inches between rod end centers.

3. Position cyclic stick full left and apply cyclic friction. Remove hardware securing 01317-4 (roll) servo assembly arm to A336-8 push-pull tube's rod end.
4. Disconnect servo harness from flight control computer's J3 ROLL receptacle. Cut and discard ty-raps securing servo harness to autopilot harnesses.
5. Support servo and remove hardware securing servo's block assembly to keel panel and brace assembly. Carefully remove servo from under pilot's seat.

B. Installation

1. Turn battery & avionics switches off and pull out AUTOPILOT (5 amp) circuit breaker at panel. Position cyclic stick full left and apply cyclic friction.
2. Position 01317-4 (roll) servo assembly under pilot's seat and install hardware securing servo's block assembly to keel panel and brace assembly. Tighten screws. Verify security.
3. Connect servo harness to flight control computer's J3 ROLL receptacle. Install ty-raps securing servo harness to autopilot harnesses as required. Cinch ty-raps until snug without over-tightening, and trim tips flush with heads. Verify harness security.
4. Install hardware securing servo arm to A336-8 push-pull tube's rod end. Standard torque bolt per § 20-32 and torque stripe per Figure 5-1. Verify security.
5. Verify length of A336-8 push-pull tube assembly connected to roll servo is 4.30 ± 0.03 inches between rod end centers.
6. Verify freedom of flight controls through full travel with and without friction applied.
7. Push in AUTOPILOT circuit breaker (5 amp) at panel. Perform ground checks as appropriate per § 22-61.
8. Install G702 cover assembly under pilot's seat. Install F445 and F680-3 collective covers. Verify security.

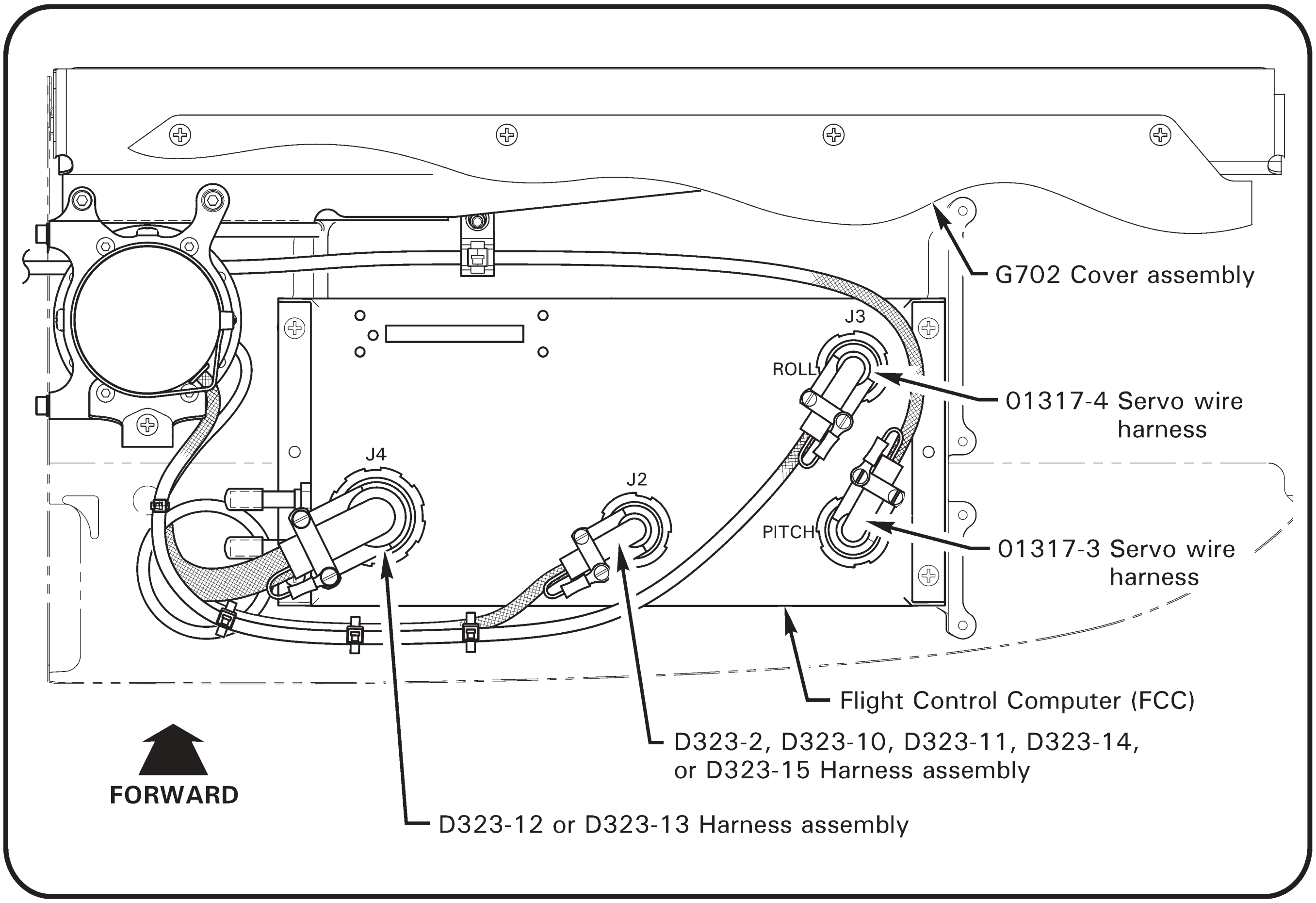

FIGURE 22-2 FLIGHT CONTROL COMPUTER

Version 51	
FCC part number	01311-03-11
Control panel part number	01309-01-01

Version 52	
FCC part number	01311-02-111
Control panel part number	01309-03-01

TABLE 22-1 SOFTWARE VERSIONS AND EQUIPMENT PART NUMBERS

22-30 Flight Control Computer (FCC)

NOTE

Refer to Table 22-1. Flight control computer (FCC) and control panels for Software Version 51 and Software Version 52 are not interchangeable. Verify part number compatibility prior to installation.

22-30 Flight Control Computer (FCC; continued)

A. Removal

1. Turn battery & avionics switches off and pull out AUTOPILOT (5 amp) circuit breaker at panel.
2. Remove G702 cover assembly under pilot's seat.
3. Disconnect D323 harness assemblies and servo assembly harnesses from flight control computer's J1 PITCH, J2, J3 ROLL, and J4 receptacles.
4. Support computer and remove screws securing computer to D358 support assemblies. Carefully remove computer from under pilot's seat.

B. Installation

> NOTE
>
> Prior to installation, verify affected FCCs were upgraded per R66 SB-37.

1. Turn battery & avionics switches off and pull out AUTOPILOT (5 amp) circuit breaker at panel.
2. Position flight control computer under pilot’s seat and install screws securing computer to D358 support assemblies. Tighten screws. Verify security.
3. Ensure pitot and static ports on FCC are capped.
4. Connect D323 harness assemblies and servo assembly harnesses to computer’s J1 PITCH, J2, J3 ROLL, and J4 receptacles. Install ty-raps securing harnesses as required. Cinch ty-raps until snug without over-tightening, and trim tips flush with heads. Verify harness security.
5. Verify freedom of flight controls through full travel with and without friction applied.
6. Push in AUTOPILOT circuit breaker (5 amp) at panel. Perform ground checks as appropriate per § 22-61.
7. Install G702 cover assembly under pilot’s seat.

22-40 Control Panel

> NOTE
>
> Refer to Table 22-1. Flight control computer (FCC) and control panels for Software Version 51 and Software Version 52 are not interchangeable. Verify part number compatibility prior to installation.

22-40 Control Panel (continued)

A. Removal

1. Turn battery & avionics switches off and pull out AUTOPILOT (5 amp) circuit breaker at panel.
2. Loosen quarter-turn fasteners securing control panel to console assembly.
3. Carefully unplug harness from control panel and remove panel.

B. Installation

1. Turn battery & avionics switches off and pull out AUTOPILOT (5 amp) circuit breaker at panel.
2. Carefully plug-in harness to control panel.
3. Tighten quarter-turn fasteners securing control panel to console assembly. Verify security.
4. Push in AUTOPILOT circuit breaker (5 amp) at panel. Perform ground checks as appropriate per § 22-61.

22-50 Cyclic Grip Assembly

A. Grip Angle Adjustment

1. Loosen cap screws securing pilot's cyclic grip, block assembly, and bar to grip weldment.
2. Rotate grip about weldment to desired angle. Special torque cap screws to 40 in.-lb.

B. Removal and Installation

To access grip switches:

1. Remove MS24693-S1 screws securing C214-27 plate to D379-1 grip. Remove switch nuts and lockwashers to free switches from plate.
2. Install switch lockwashers (new) and nuts and tighten switches to plate; verify switch security. Install screws securing plate to grip.
3. Turn battery switch on and perform ground checks as appropriate per § 22-61.

C. Schematic

Refer to Figure 98-1 for F024 electrical system schematic.

22-60 Maintenance

22-61 Ground Checks

> NOTE
>
> Perform the following ground checks after component replacement or other repairs have been performed on the autopilot system. Perform ground checks after any incident that may have affected autopilot or related equipment prior to return to service.

> NOTE
>
> Refer to § 22-62 for troubleshooting if any of the following ground checks cannot be verified.

1. Turn battery & avionics switches on. Verify four beeps in headset and control panel LEDS alternate white/green:

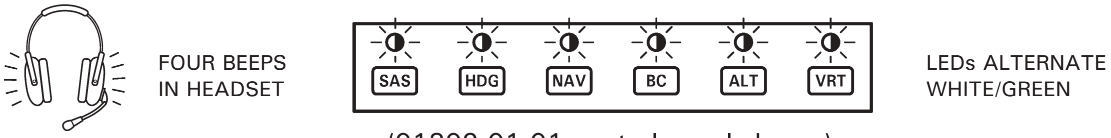

(01309-01-01 control panel shown)

2. Verify SAS enters standby mode approximately 6 seconds after PFD aligns. Verify no sound in headset and control panel SAS LED is white, other LEDs are dark:

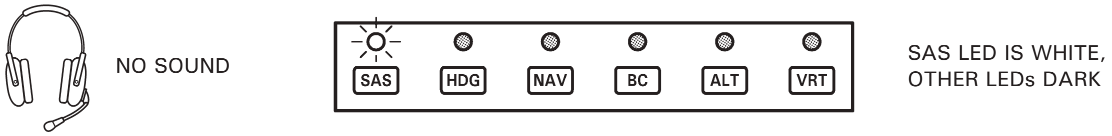

3. With cyclic friction full off, verify cyclic moves freely within hydraulic servo longitudinal and lateral deadbands.

4. Engage SAS mode (cyclic should feel "energized"). Verify no sound in headset and control panel SAS LED is green, other LEDs are dark:

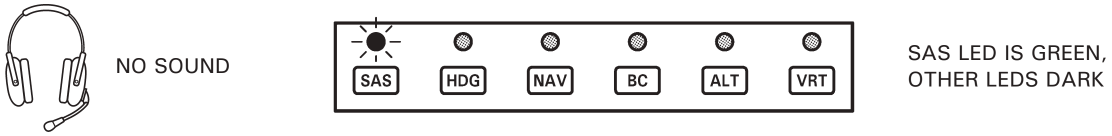

5. With SAS engaged, displace cyclic at least 1 inch from neutral position and verify a vibrating resistance is encountered. Perform check for roll & pitch axes.

22-61 Ground Checks (continued)

6. Refer to step 2. Engage SAS and verify SAS disengages when control panel's SAS button is depressed or when AP OFF button on the cyclic grip is depressed. Verify four beeps in headset and control panel SAS LED is white, other LEDs are dark:

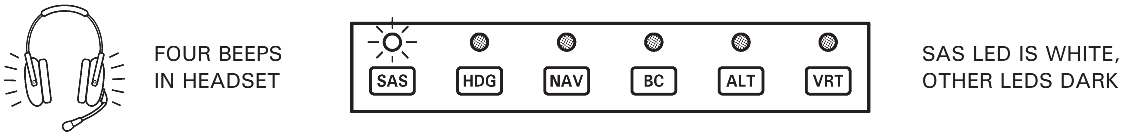

7. Perform pitot system leak test per § 95-10 and, while airspeed indicates > 50 knots: Engage SAS and ALT modes. Verify no sound in headset and SAS & ALT LEDs are green, other LEDs are dark:

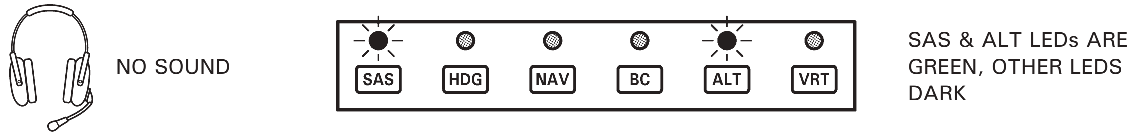

8. Disengage ALT mode. Verify no sound in headset and SAS LED is green, other LEDs are dark:

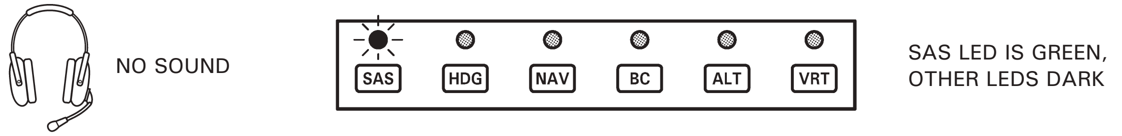

9. Refer to steps 7 & 8. Engage SAS and HDG modes. Verify no sound in headset and SAS & HDG LEDs are green, other LEDs are dark. Disengage HDG mode. Verify no sound in headset and SAS LED is green, other LEDs are dark.

10. Engage SAS, HDG, and ALT modes. Verify no sound in headset and SAS, HDG, and ALT LEDs are green, other LEDs are dark. Press AP OFF button on cyclic grip. Verify no sound in headset and SAS LED is green, other LEDs are dark.

11. Engage SAS, HDG, and ALT modes. Verify no sound in headset and SAS, HDG, and ALT LEDs are green, other LEDs are dark. Press AP OFF button twice on cyclic grip. Verify four beeps in headset and SAS LED is white, other LEDs are dark.

22-62 Troubleshooting

CAUTION

Adjustment to autopilot equipment is not permitted.

PROBLEM	ACTION
Control panel lights do not illuminate or flash when master switch is turned on.	Verify computer is getting power.
	Return computer to RHC.
System does not enter standby-mode (lights flash continuously).	Verify attitude indicator bank angle less than 6 degrees.
	Verify attitude indicator output between 13 and 14 pins is less than 0.3 volts at connector.
	Check wiring between attitude indicator and computer.
	Contact RHC Technical Support.
SAS does not engage when TRIM button depressed for longer than 1.25 seconds; pressing TRIM button does not reset reference attitude; pressing TRIM button does not reset reference altitude in altitude hold.	Check wiring between TRIM button and computer.
	Verify integrity of TRIM button.
	Return computer to RHC.
SAS does not disengage when cyclic grip AP OFF button depressed.	Check wiring between AP OFF button and computer.
	Verify integrity of AP OFF button.
	Return computer to RHC.
SAS does not engage or disengage when control panel buttons pressed.	Engage and/or disengage SAS using cyclic grip buttons. If system responds properly, failure is in control panel or associated wiring to computer.
	Contact RHC Technical Support.
SAS does not hold pitch attitude, but holds roll attitude or vice versa.	Check servo-to-cyclic linkage.
	Check wiring between faulty servo and computer.
	Return faulty servo and computer to RHC.
SAS disengages unintentionally (accompanied by four beeps in headset).	Contact RHC Technical Support.
Autopilot mode disengages unintentionally, and reverts to SAS mode (accompanied by single beep in headset).	Determine if navigation signal may have gone invalid due to operational reason.
	Check wiring between appropriate instrument/avionics and computer.
	Check instrument/avionics for failure flags (steady and intermittent).
Cyclic vibrates erratically, SAS does not disengage.	Manually override SAS, system should disengage automatically.
	Contact RHC Technical Support.
Helicopter enters low frequency pitch oscillation when ALT engaged; helicopter diverges nose-up or nose-down when ALT engaged.	Return computer to RHC.

22-62 Troubleshooting (continued)

PROBLEM	ACTION
ILS glideslope tracking performance is poor.	Check for excessive friction in longitudinal cyclic.
	Check GPS output to computer.
Cyclic force seems higher than normal with SAS disengaged.	Verify servo clutches are disengaged, and clutch arms do not move when SAS is Off or in stand-by-mode.
No aural warning in headset when SAS is disengaged.	Check wiring to unswitched audio input to audio panel.

Intentionally Blank

CHAPTER 25

FURNISHINGS

Section *Title* *Page*

25-00 Description 25.1
25-10 Seat Harnesses 25.3
25-11 Seat Harness Removal 25.3
25-12 Seat Harness Installation 25.4
25-20 Seat Assemblies and Back Rests 25.5
25-21 Seat Assembly Removal and Installation 25.5
25-22 Back Rest Assembly Removal and Installation 25.6
25-23 Back Rest Cushion Replacement 25.7
25-24 Heated Seats 25.8
25-30 Carpet 25.11
25-40 Insulation (Foam and Headliner) 25.12
25-50 General Maintenance 25.12
25-51 Pilot's Operating Handbook (POH) Strap Replacement 25.12
25-52 License Holder Replacement 25.13
25-53 Map Pocket Replacement 25.13
25-60 Emergency Equipment 25.14
25-61 Emergency Locator Transmitter (ELT) 25.14
25-62 Fire Extinguisher 25.15
25-70 Cargo Hook Installation 25.16
25-71 Description 25.16
25-72 Configurations 25.17
25-73 Cargo Hook 25.18
25-74 Cyclic Grips, Electric Cargo Hook Release, Remote Equipment Provisions, and Left-Seat Collective 25.22
25-75 Mechanical Cargo Hook Release Control Rigging 25.25
25-76 Load Cell and Meter 25.26
25-77 Left-Seat Instruments 25.27
25-78 Doors with Bubble Windows and Fans 25.28
25-79 Skid-Mounted Mirrors 25.30
25-80 Cabin Interior Hardpoint Installation 25.31
25-81 Arm Rest 25.31
25-90 Cyclic Guard 25.32

Intentionally Blank

CHAPTER 25

FURNISHINGS

25-00 Description

The seats are not adjustable but the pilot-side pedals are adjustable. Each helicopter is supplied with a removable back cushion to position the pilot farther forward. This allows shorter pilots to reach the pedals, the cyclic grip in its most forward position, and the controls on the center console.

Refer to § 25-24 for description of optional heated seats.

Each seat is equipped with a combined lap belt and inertia reel shoulder strap. The inertia reel is normally free but will lock if there is sudden movement as would occur in an accident.

Five-point harnesses are optional for the front seats. The lap belts on these harnesses should be adjusted to eliminate slack. The lower strap should be adjusted as necessary to ensure that the buckle does not interfere with the cyclic grip at aft cyclic. The harness is equipped with a webbing stop located above the inertia reel. The stop limits shoulder strap retraction and should be adjusted so the straps are comfortable without excessive slack.

Optional anchor loops located in the cabin ceiling above the door posts provide attachment points for a safety tether for equipment or occupants during doors-off operation.

Refer to § 25-90 for description of optional cyclic guard.

The main baggage compartment is located between the cabin and the engine compartment. It is accessed via a large door on the aircraft right side. The cowl door annunciator illuminates to warn the pilot when the door is not latched. A light illuminates the compartment when the battery switch is ON. Tie down anchors are provided for securing items in the baggage compartment. Observe placarded weight limits. Placard locations and illustrations are given in Chapter 11.

Additional compartments are located under each seat except the center rear seat. Seat cushions hinge forward for access to these compartments. Do not load these compartments above the maximum fill lines. The lines indicate required crush space for the seats in an accident. Baggage compartment dimensions are given in Chapter 6.

WARNING

Never repair or modify seat assemblies, including seat assembly fabric, seat pans, or hook and loop tape (Velcro) securing fabric to seat pans. Seat assembly energy-absorption design is critical to occupant safety. To preserve crashworthiness, maintenance is limited to seat assembly replacement.

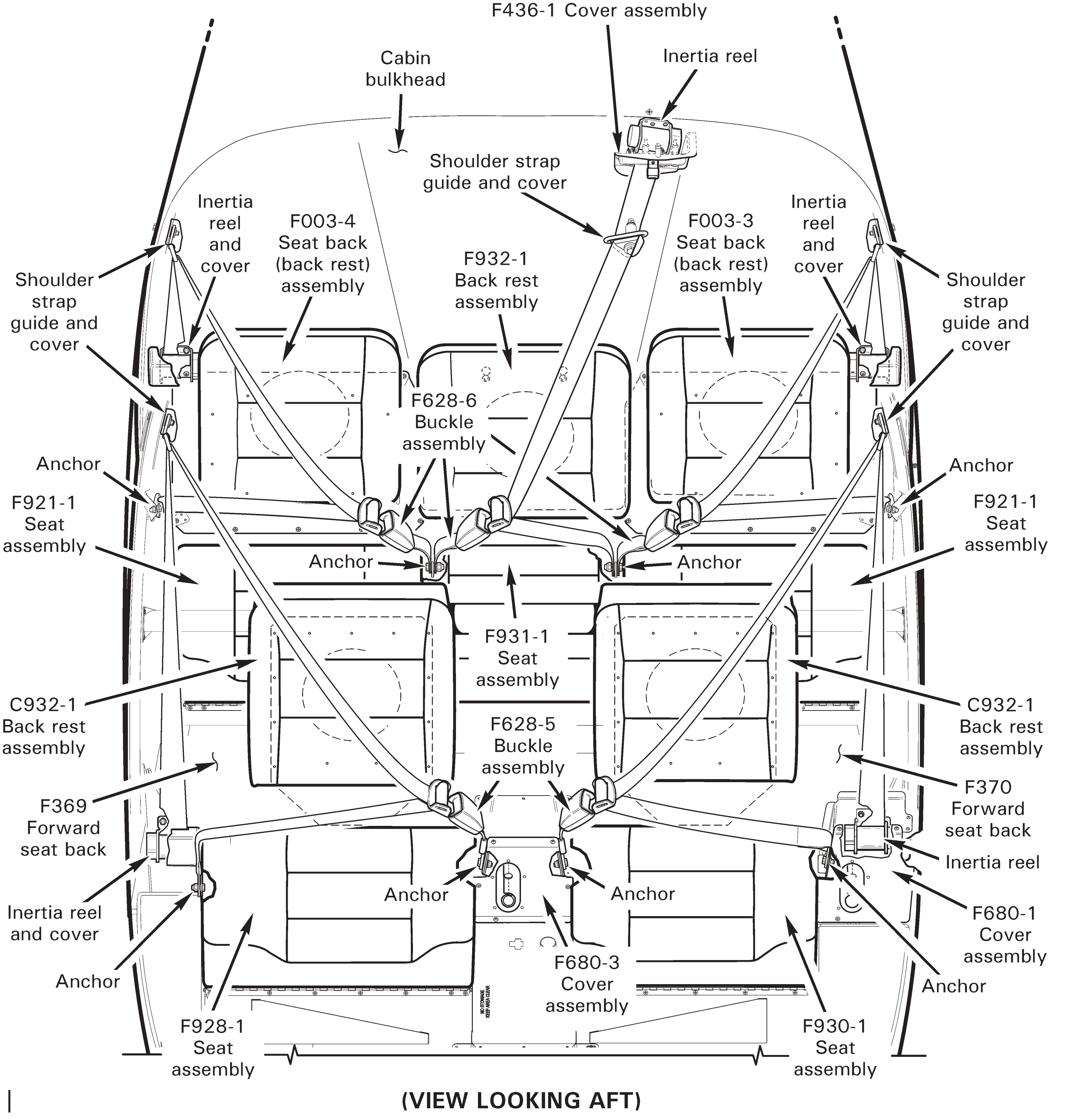

FIGURE 25-1 SEAT HARNESSES, SEAT ASSEMBLIES, AND BACK RESTS

25-10 Seat Harnesses

Refer to R66 Illustrated Parts Catalog (IPC) Figures 25-3 and 25-5. Refer to Figures 25-9, 25-11, and 25-13 for optional Five-Point Harness Installation.

25-11 Seat Harness Removal

A. Forward Seat Harness (Standard)

1. Refer to Figure 25-1. Remove F680-1 and F680-3 collective cover assemblies; hinge seat assemblies forward.
2. Remove hardware securing each F628-5 buckle assembly to inboard anchor, and hardware securing each lap belt fitting to outboard anchor.
3. Remove shoulder strap guide covers and hardware securing guides to door frames.
4. Remove right side inertia reel cover and hardware securing reels to F369 and F370 forward seat backs. Remove seat harnesses.

B. Five-Point Harness (Optional, not shown; for forward seats only)

1. Remove screws securing F424-1 bumper assembly to F423-4 tube assembly and remove bumper.
2. Refer to Figure 25-1. Remove F680-1 and F680-3 collective cover assemblies; hinge seat assemblies forward.
3. Remove hardware securing lap belts to inboard and outboard anchors. Remove hardware securing fifth-point belts to seat boxes.
4. Remove hole plugs, then remove inertia reel covers and hardware securing reels to F369 and F370 forward seat backs. Remove five-point harnesses.

C. Aft Left and Right Seat Harness

1. Refer to Figure 25-1. Remove F931-1 seat assembly; hinge left and right seat assemblies forward.
2. Remove hardware securing each F628-6 buckle assembly to inboard anchor, and hardware securing each lap belt fitting to outboard anchor.
3. Remove shoulder strap guide covers and hardware securing guides to door frames.
4. Remove inertia reel covers and hardware securing reels to cabin bulkhead.

D. Center Seat Harness

1. Remove tailcone cowling per Section 53-23.
2. Refer to Figure 25-1. Remove F931-1 seat assembly; hinge left and right seat assemblies forward.
3. Remove hardware securing F628-6 buckle assembly to inboard right side anchor and hardware securing lap belt fitting to inboard left side anchor.
4. Remove shoulder strap guide cover and hardware securing guide to cabin bulkhead and upper frame.
5. Remove F436-1 (headset jack) cover assembly and hardware securing inertia reel to cabin bulkhead.

25-12 Seat Harness Installation

A. Forward Seat Harness (Standard)

1. Refer to Figure 25-1. Install hardware securing inertia reels to F369 and F370 forward seat backs. Install right side reel cover.
2. Install hardware securing shoulder strap guides to door frames. Standard torque bolts per Section 20-32. Install guide covers.
3. Install hardware securing F628-5 buckle assemblies to inboard anchors, and lap belt fittings to outboard anchors. Position buckle swage between two forward rivets. Standard torque bolts per Section 20-32.
4. Install F680-1 and F680-3 collective cover assemblies.

B. Five-Point Harness (Optional, not shown; for forward seats only)

1. Attach inertia reels to F369 and F370 forward seat backs. Install covers and hole plugs. Verify security.
2. Attach lap belt fittings to inboard and outboard anchors. Standard torque bolts per Section 20-32.
3. Attach fifth point belts to seat boxes.
4. Refer to Figure 25-1. Install F680-1 and F680-3 collective cover assemblies; hinge seat assemblies forward.
5. Position F424-1 bumper assembly on F423-4 tube assembly and install screws. Verify security.

C. Aft Left and Right Seat Harness

1. Refer to Figure 25-1. Install hardware securing inertia reels to cabin bulkhead. Install reel covers.
2. Install hardware securing shoulder strap guides to door frames. Standard torque bolts per Section 20-32. Install guide covers.
3. Install hardware securing F628-6 buckle assemblies to inboard anchors, and lap belt fittings to outboard anchors. Standard torque bolts per Section 20-32.
4. Install F931-1 seat assembly.

D. Center Seat Harness

1. Refer to Figure 25-1. Install hardware securing inertia reel to cabin bulkhead. Install F436-1 (headset jack) cover assembly. Verify security.
2. Install hardware securing shoulder strap guide to cabin bulkhead and upper frame. Standard torque bolt per Section 20-32. Install guide cover.
3. Install hardware securing F628-6 buckle assembly to inboard right side anchor, and lap belt fitting to outboard left side anchor. Standard torque bolts per Section 20-32.
4. Install F931-1 seat assembly.
5. Install tailcone cowling per Section 53-23.

25-20 Seat Assemblies and Back Rests

25-21 Seat Assembly Removal and Installation

> **WARNING**
>
> **Never modify seat assemblies, including seat assembly fabric, seat pans, or hook and loop tape (Velcro) securing fabric to seat pans. Seat assembly energy-absorption design is critical to occupant safety.**

A. Left and Right Seat Assembly Removal

1. If heated seats are installed, turn battery switch off and pull out SEAT HEATERS circuit breaker (20 amp) on circuit breaker panel. Disconnect F940-3 (forward seats) or F940-4 (aft seats) wire harness from F940-1 module assembly wiring at connector.
2. Refer to Figure 25-1. Remove hardware securing seat assembly hinge to seat box and remove seat assembly.

B. Left and Right Seat Assembly Installation

1. If heated seats are installed, turn battery switch off and pull out SEAT HEATERS circuit breaker (20 amp) on circuit breaker panel.
2. Refer to Figure 25-1. Position seat assembly on seat box and install hardware securing hinge to box. Verify security.
3. If heated seats are installed, connect F940-3 (forward seats) or F940-4 (aft seats) wire harness to F940-1 module assembly wiring at connector. Verify security. Push in circuit breaker on circuit breaker panel and turn battery switch on. Verify proper function of switches at control panel. Verify temperature setting system functionality by toggling between high/low/off heat positions.

C. Center Seat Assembly

Refer to Figure 25-1. Attach or detach center seat assembly to or from the seat box via hook and loop tape (Velcro).

25-22 Back Rest Assembly Removal and Installation

A. Aft Left and Right Back Rest Assembly Removal

1. If heated seats are installed, turn battery switch off and pull out SEAT HEATERS circuit breaker (20 amp) on circuit breaker panel.
2. Refer to Figure 25-1. Remove hardware securing back rest assembly to cabin bulkhead.
3. If heated seats are installed, disconnect F940-3 (forward seats) or F940-4 (aft seats) wire harness from F939-2 pad assembly wiring at connector.
4. Remove back rest assembly.

B. Aft Left and Right Back Rest Assembly Installation

1. If heated seats are installed, turn battery switch off and pull out SEAT HEATERS circuit breaker (20 amp) on circuit breaker panel. Connect F940-3 (forward seats) or F940-4 (aft seats) wire harness to F939-2 pad assembly wiring at connector. Verify security.
2. Refer to Figure 25-1. Install hardware securing back rest assembly to cabin bulkhead. Verify security.
3. If heated seats are installed, push in circuit breaker on circuit breaker panel and turn battery switch on. Verify proper function of switches at control panel. Verify temperature setting system functionality by toggling between high/low/off heat positions.

C. Center Back Rest Assembly Removal

Refer to Figure 25-1. Detach back rest assembly hook and loop tape (Velcro) at bottom; slide back rest assembly up and out of keyhole slots.

D. Center Back Rest Assembly Installation

Refer to Figure 25-1. Install back rest assembly in keyhole slots and slide down. Press firmly on back rest assembly hook and loop tape (Velcro) at bottom. Verify security.

25-23 Back Rest Cushion Replacement

A. Forward Back Rest

1. If heated seats are installed, turn battery switch off and pull out SEAT HEATERS circuit breaker (20 amp) on circuit breaker panel. Disconnect F940-3 wire harness from F939-2 pad assembly wiring at connector.
2. Refer to Figure 25-1. Drill out rivets securing back rest cushion to seat back panel and deburr holes. Remove cushion.
3. Remove old adhesive residue from back rest support tube with plastic wedge. Wipe surface with clean cloth, wet with acetone.
4. Center and straighten new cushion on seat back panel. Match drill seat back panel #30 holes through cushion panel and deburr. Clean up debris.
5. Attach back rest cushion to seat back panel with B204-2 rivets.
6. Apply B270-18 adhesive to underside of back rest cushion flap and to mating portion of support tube. Pull flap around tube, smooth wrinkles, and trim excess flap. Remove excess adhesive prior to curing.
7. If heated seats are installed, push in circuit breaker on circuit breaker panel and turn battery switch on. Verify proper function of switches at control panel. Verify temperature setting system functionality by toggling between high/low/off heat positions.

B. Aft Left and Right Back Rest

1. Remove back rest assembly per § 25-22.
2. Drill out rivets securing back rest cushion to seat back panel and deburr holes. Remove cushion.
3. Center and straighten new cushion on seat back panel. Match drill seat back panel #30 holes through cushion panel and deburr. Clean up debris.
4. Attach back rest cushion to seat back panel with B204-2 rivets.
5. Install back rest assembly per § 25-22.

25-24 Heated Seats

A. Description

Heated seat bottoms and backrests for the forward seats and outboard rear seats are an option. Switches to control low and high heat settings for all four heated seats are located on the panel above the right-side collective boot.

The seat heaters operate only when the generator switch is in the ON position to reduce the likelihood of inadvertently draining the battery before the engine is started.

B. Schematics

Refer to Figure 98-28 for heated seats installation electrical schematic.

C. Removal and Installation

Seat Assemblies

Remove and install seat assemblies per § 25-21 Part A.

(Circuit Board) Module Assembly Replacement

1. Remove seat assembly per § 25-21 Part A.
2. Disconnect F940 harness from F941-1 module assembly at connector.
3. Drill out rivets securing module to seat assembly pan and remove module. Clean up debris.
4. Cleco (sheet metal fastener) new module to seat assembly pan. Progressively remove clecos and install B204-1 rivets securing module to pan. Verify security.
5. Connect F940 harness to module at connector. Verify security.
6. Install seat assembly per § 25-21 Part A.

D. Scheduled Maintenance and Inspections

Refer to § 5-45 100-Hour/Annual Inspection.

F. Special Maintenance and Inspections

1. Open circuit breaker panel and applicable access panels.
2. Verify correct fuses are installed in circuits: F940-2 harness assembly requires (4) AGC-5 fuses, one for each heated seat.
3. Inspect condition of and verify no obvious damage to F941-1 module assemblies, F940-1 switch assembly, wire harnesses, copper bus bars, circuit breaker, or circuit breaker wiring. Verify no loose, chafed, or broken wires or terminals. Verify no evidence of arcing. Verify installed equipment security.
4. Secure circuit breaker panel and removed access panels.
5. Verify proper function of switches at control panel. Verify temperature setting system functionality by toggling between high/low/off heat positions.

Intentionally Blank

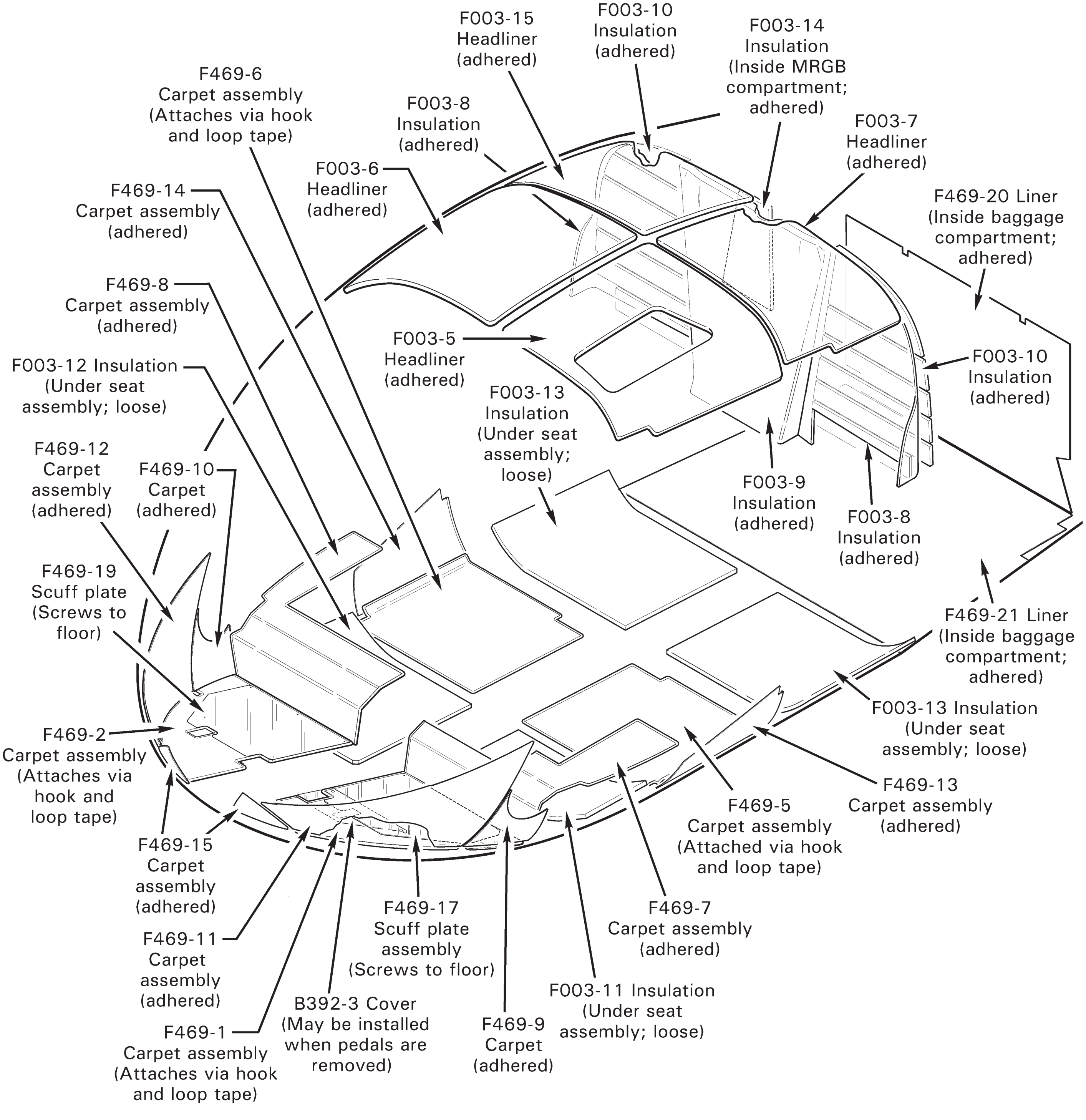

FIGURE 25-2 CARPET AND INSULATION

25-30 Carpet

A. Forward (Floor) Carpet Assembly Removal

1. Refer to Figure 25-2. Remove adjustable and/or removable pedals, as required.
2. Remove hardware securing scuff plates (and carpet) to cabin floor. Detach carpet from floor via hook and loop tape (Velcro).

B. Forward (Floor) Carpet Assembly Installation

1. Refer to Figure 25-2. Attach carpet to floor via hook and loop tape (Velcro).
2. Install scuff plates; install B392-3 left-side cover (may be installed when pedals are removed), as required.
3. Install adjustable and/or removable pedals, as required.

C. Aft (Floor) Carpet Assembly Removal and Installation

1. Refer to Figure 25-2. Attach or detach carpet to and from floor via hook and loop tape (Velcro).

D. Carpet and Liner

CAUTION

Use caution when removing adhered carpet if carpet is intended for reuse.

1. Removal
   a. Starting at corners, gently peel back carpet by hand, or with plastic wedge or putty knife.
   b. Dampen old adhesive with Dupont Prep-Sol (or equivalent) to facilitate removal.
2. Installation
   a. Verify proper carpet fit. Trim as required (do not trim carpet welt).
   b. Apply B270-8 adhesive to bonding surface and carpet backing. Press carpet to surface, smooth wrinkles, and remove excess adhesive prior to curing.

25-40 Insulation (Foam and Headliner)

A. Removal

> NOTE
>
> Use caution not to damage surface underneath insulation when removing insulation with tools.

> NOTE
>
> Insulation is installed using adhesive, except under seat assemblies. Order new insulation as required; reuse of removed insulation is not recommended.

1. Peel off insulation by hand.
2. Using plastic wedge or putty knife, carefully remove residual insulation and old adhesive.
3. Wipe bonding surface with clean cloth, wet with acetone.

B. Installation

1. Verify proper insulation fit. Trim as required.
2. Apply B270-8 adhesive to bonding surface and insulation backing. Press insulation to surface, smooth wrinkles, and remove excess adhesive prior to curing.

25-50 General Maintenance

25-51 Pilot's Operating Handbook (POH) Strap Replacement

A. Removal

1. Remove POH.
2. Drill out rivets securing POH retaining strap to cabin right side and remove strap. Deburr holes and clean up debris.

B. Installation

1. Cleco POH retaining strap to cabin right side holes. Remove clecos and install rivets. Verify security.
2. Install POH.

25-52 License Holder Replacement

A. Removal

1. Remove aircraft documents from license holder.
2. Drill out rivets securing license holder to cabin under left side windshield frame and remove license holder. Deburr holes and clean up debris.

B. Installation

1. Cleco license holder to cabin holes under left side windshield frame. Remove clecos and install rivets. Verify security.
2. Insert aircraft documents into holder and tuck upper flap into frame.

25-53 Map Pocket Replacement

A. Removal

1. Drill out rivets securing map pocket to front wall of forward seat box. Remove pocket, washers, and retaining strips. Deburr holes and clean up debris.

B. Installation

1. Fold (long) outboard pocket edge around (long) A913-1 strip, align holes, and align holes with front of forward seat box. Cleco in place.
2. Pull material taut, fold (short) inboard pocket edge around (short) A913-2 strip, align holes, and align holes with front of forward seat box. Cleco in place. Trim excess material.
3. Remove clecos and install washers and rivets.

25-60 Emergency Equipment

25-61 Emergency Locator Transmitter (ELT)

A. Description

The ELT activates when subjected to a significant change in velocity (as in a crash), by remote control switch located on the cyclic control panel, or by a switch on the ELT transmitter. Refer to § 96-90 for system description.

Refer to Kannad Aviation AF Integra / AF-H Integra or 406 AF-Compact/406 AF-Compact (ER) ELT Installation and Operation Manual for maintenance requirements and procedures. Refer to § 1-90 for scheduled maintenance.

Register an ELT when first purchased, when contact information changes, or when aircraft ownership, or tail number changes. Registration information is available online at: www.cospas-sarsat.org.

Dongles contain a memory chip that must be programmed with aircraft-specific information prior to installation for the ELT to function. The dongle may be removed and shipped to RHC or a Kannad Service Center for reprogramming. Kannad Aviation's Programming Data Sheet is available online at: www.robinsonheli.com.

B. Transmitter

Removal

1. Release D693-4 strap assembly or B359-2 (reusable) ty-rap.
2. Release Velcro strap; disconnect dongle and antenna wiring from transmitter at connectors and remove transmitter.

Installation

1. Connect dongle and antenna wiring to transmitter at connectors. Verify security.
2. Position transmitter on mounting bracket and secure with Velcro strap. Secure D693-4 strap assembly or install B359-2 (reusable) ty-rap around transmitter and bracket. Verify security.

C. Dongle

Removal

Cut and discard ty-raps as required, disconnect dongle from transmitter and airframe harness at connectors, and remove dongle.

Installation

1. Connect programmed dongle to transmitter and airframe harness at connectors.
2. Install ty-raps as required. Cinch ty-raps until snug without over-tightening, and trim tips flush with heads. Verify security.

25-62 Fire Extinguisher

CAUTION

Extinguisher is rated for a max storage and operating temperature of 120°F (49°C). If operating conditions would expose extinguisher to higher temperatures (e.g. long term parking in the sun in a hot climate), remove extinguisher and store it in a cooler area between flights.

A. Inspection

Every month: Visually inspect fire extinguisher and perform weight check (a scale with 1 gram precision or better is required). Remove extinguisher from service if total weight falls below 500 grams. If desired, order one G654-15 decal (blank maintenance log) and attach to extinguisher, to record weight checks.

Every 12 years: Remove fire extinguisher from service. Year of manufacture is labeled on bottom of extinguisher; remove extinguisher from service at end of 12th year from labeled date.

B. Bracket Removal

1. Unlatch fire extinguisher bracket and remove extinguisher.
2. Remove hardware securing bracket to chin and remove bracket.

C. Bracket Installation

1. Install hardware securing fire extinguisher bracket to chin. Select screw length as required to provide 0.00–0.06 inch thread exposure. Verify security.
2. Install fire extinguisher and latch bracket.

Intentionally Blank

25-70 Cargo Hook Installation

25-71 Description

See R66 Pilot's Operating Handbook Cargo Hook Supplement (Section 9) for complete system description.

The cargo hook installation includes a cargo hook, electric release buttons on left and right side cyclic, mechanical release knobs at left and right front seat, hydraulic and radio buttons and switches on left side cyclic, a start button on left side collective, a load meter, gas temperature gauge, and torque meter at left front seat, and provisions for remote control of external load equipment on left and right side cyclic. Optional equipment includes forward doors with large bubble windows and skid-mounted mirrors.

Doors with large bubble windows are designed such that pilots may lean their head into the bubble in order to look straight down at an external load. The left door contains a second, lower window that allows the pilot to look back inside at the load meter, gas temperature gauge, and torque meter. Each door contains an electric fan to aid with defogging.

A padded elbow rest is provided above the left side collective. This allows the left-side pilot to brace against the elbow rest for stability while leaning out to see external loads. The elbow rest is adjustable up and down via a friction knob.

A cabin interior hardpoint installation is for use with safety harnesses.

The cargo hook is suspended from a hard point on the helicopter belly. For overhaul requirements for the cargo hook itself, refer to Onboard Systems overhaul manual (refer to § 25-73 Part D).

The load weigh system consists of a load cell incorporated in the hook attaching hardware and a load meter installed at left front seat.

25-72 Configurations

See R66 Pilot's Operating Handbook Cargo Hook Supplement (Section 9) for approved flight configurations.

25-73 Cargo Hook

A. Schematic

Refer to Figure 98-29 for cargo hook wiring schematic.

B. Removal

1. Turn battery switch off and pull out (10 amp) HOOK RELEASE and (10 amp) EXT LOAD (if installed) circuit breaker(s) on circuit breaker panel.
2. Disconnect G140-6 (installations without load cell) or G140-7 (installations with load cell) harness assembly from 528-029-00 cargo hook at hook connectors.
3. Remove cotter pin, castellated nut, washers, and bolt (G132-1) or load cell (G132-2 or G132-4) securing hook to hard point's D136-2 support. Remove hook.
4. Remove screws securing (mechanical release) cover to hook and remove cover. Disconnect D676-3 (control) cable assembly's ball from mechanical release's fork.
5. Loosen jam nut and unthread hook from cable assembly.
6. Configure helicopter for flight with hook removed per Part F as required.

C. Installation

1. Turn battery switch off and pull out (10 amp) HOOK RELEASE and (10 amp) EXT LOAD (if installed) circuit breaker(s) on circuit breaker panel.
2. Configure helicopter for flight with hook installed per Part F as required.
3. Loosen jam nut and thread 528-029-00 cargo hook onto D676-3 cable assembly. Verify threads protrude beyond plate flange.
4. Insert bolt and washer (G132-1) or load cell (G132-2 or G132-4) securing hook to hard point's D136-2 support. Install washers and castellated nut, and tighten nut finger tight (back off as required to align cotter pin holes, but do not install cotter pin). Verify security.

CAUTION

Overtightening castellated nut can damage load cell.

5. Rig mechanical release control per § 25-75.
6. Install cotter pin at hook-to-hard point fastener.
7. Connect G140-6 (installations without load cell) or G140-7 (installations with load cell) harness assembly to hook at hook connectors. Verify security.

25-73 Cargo Hook (continued)

C. Installation (continued)

CAUTION
The cargo hook must be able to swing freely in all directions. Incorrect restraining of the mechanical release control cable could cause uncommanded cargo hook release if hook were to strain against cable's inner wire.

8. Maneuver cargo hook and verify wire harness and control cable have sufficient slack through full range of travel.
9. Refer to Figure 25-3. Push-in (10 amp) HOOK RELEASE and (10 amp) EXT LOAD (if installed) circuit breaker(s) on circuit breaker panel. Turn battery switch on. Verify proper function of electrical release. Reset load beam by hand. Verify lock indicator returns to locked position. Turn battery switch off.
10. Verify proper function of mechanical release control. Reset load beam by hand. Verify lock indicator returns to locked position.

D. Scheduled Inspections

NOTE
Track time of external load operations when anything is attached to the cargo hook and the helicopter is flying.

Every 100 hours of external load operations or annually, whichever occurs first:

1. Push-in (10 amp) HOOK RELEASE and (10 amp) EXT LOAD (if installed) circuit breaker(s) on circuit breaker panel. Turn battery switch on. Refer to Figure 25-3. Verify proper function of electrical hook release. Reset load beam by hand. Verify lock indicator returns to locked position. Turn battery switch off.
2. Verify proper function of mechanical release control. Reset load beam by hand. Verify lock indicator returns to locked position.
3. Maneuver cargo hook and verify wire harness and control cable have sufficient slack through full range of travel.
4. Verify proper routing and security of mechanical release control cable; verify smooth actuation without binding.
5. Remove screws securing (mechanical release) cover to 528-029-00 cargo hook and remove cover. Refer to Figure 25-4. Rotate release lever clockwise to remove free play (lock indicator will begin to move) and measure gap between fork and ball as shown. Adjust gap per § 25-75 as required to obtain measurement between 0.15–0.25 inch.
6. Inspect condition of cargo hook equipment for damage. Verify equipment security.

25-73 Cargo Hook (continued)

D. Scheduled Inspections (continued)

Every 1000 hours of external load operations or 5 years, whichever occurs first:

1. Overhaul cargo hook per Onboard Systems Component Maintenance Manual Document No. 122-017-00. Contact Onboard Systems for assistance locating authorized overhaul facilities.

E. Special Inspections

For troubleshooting of the cargo hook only, refer to Onboard Systems Troubleshooting Guide Document No. 125-004-00 available for download on their website at www.onboardsystems.com.

F. Configurations for Flight

1. Configuration for Flight with Cargo Hook Removed

   a. Remove cargo hook per Part B.

   b. Disconnect G140-6 (installations without load cell) or G140-7 (installations with load cell) harness assembly at connector on belly. Install FTC-4 caps (labeled “FC-4”) over open belly receptacle(s); verify cap security. Cut and discard ty-raps as required and remove harness assembly (leave D676-3 [control] cable assembly looped to A215-149 o-ring).

   c. Remove hardware securing D136-3 bumpers and D136-2 support to G137-1 hardpoint installation rod ends and remove bumpers and support.

   d. Remove (2) B526-6 (or MS27039C0806) screws (select two fasteners spaced apart to provide best cable security) securing F794-2 (access) panel to belly; install (2) MS27039C0816 screws, (2) AN742-4 clamps, and (2) A130-38 spacers to secure control cable assembly to belly. Verify cable and hardware security.

   e. Revise Weight and Balance Record in R66 Pilot’s Operating Handbook (POH) Section 6 to incorporate the following data:

   Subtract:

Weight	Long. Arm	Long. Moment	Lat. Arm	Lat. Moment
3.90 lb	90.84 in.	354.28 in.-lb	–4.10 in.	–15.99 in.-lb

25-73 Cargo Hook (continued)

F. Configurations for Flight (continued)

2. Configuration for Flight with Cargo Hook Installed

a. Remove (2) MS27039C0816 screws, (2) AN742-4 clamps, and (2) A130-38 spacers securing D676-3 (control) cable assembly to F794-2 (access) panel and belly; install (2) B526-6 (or MS27039C0806) screws. Verify security.

b. Install hardware securing D136-3 bumpers and D136-2 support to G137-1 hardpoint installation rod ends. Standard torque fastener per § 20-32 and torque stripe per Figure 5-1.

c. Remove FTC-4 cap (labeled "FC-4") from hook harness assembly receptacle on belly. Connect G140-6 (installations without load cell) or G140-7 (installations with load cell) harness assembly to receptacle; verify security. Loop A215-149 o-ring around harness and control cable assembly. Install ty-raps as required; cinch ty-raps until snug without over-tightening, and trim tips flush with heads.

d. Install cargo hook per Part C steps 3 thru 10.

e. Revise Weight and Balance Record in R66 Pilot's Operating Handbook (POH) Section 6 to incorporate the following data:

Add:

Weight	Long. Arm	Long. Moment	Lat. Arm	Lat. Moment
3.90 lb	90.84 in.	354.28 in.-lb	–4.10 in.	–15.99 in.-lb

25-74 Cyclic Grips, Electric Cargo Hook Release, Remote Equipment Provisions, and Left-Seat Collective

A. Schematics

Refer to Figure 98-29 for cargo hook wiring schematic.

Refer to Figure 98-30 for external load controls wiring schematic.

Refer to Figure 98-31 for copilot instrument installation wiring schematic.

B. Removal and Installation

Refer to § 67-12 for cyclic grip assembly removal and installation procedures.

For removable cyclic grip, disconnect the electrical connectors located near the quick release pin before removing the left cyclic grip. Reconnect the connectors when installing the left cyclic grip.

For removable collective stick:

a. Removal: Unplug push-to-start button cable from jack. Unbutton boot and depress locking pins to disengage and remove collective stick.

b. Installation: Depress locking pins and insert collective stick in control. Verify both locking pins engage holes to secure stick; re-button boot. Plug in push-to-start button cable to jack.

C. Scheduled Inspections

Refer to § 5-45 100-Hour/Annual inspection.

Intentionally Blank

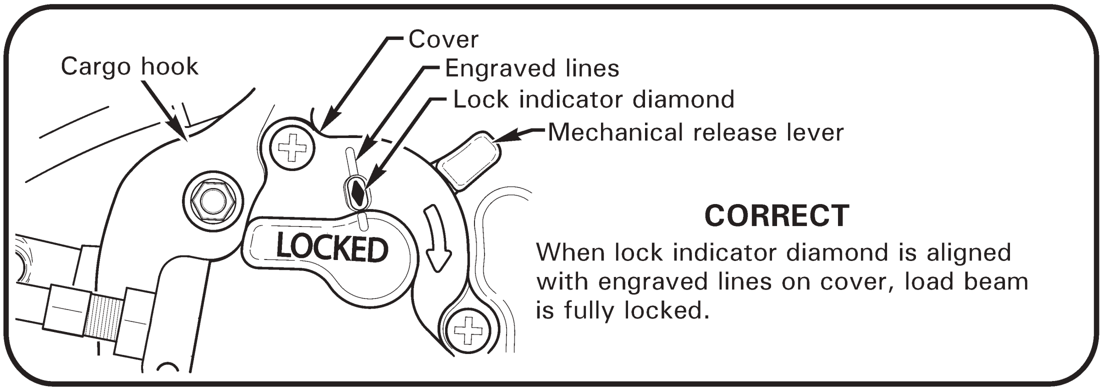

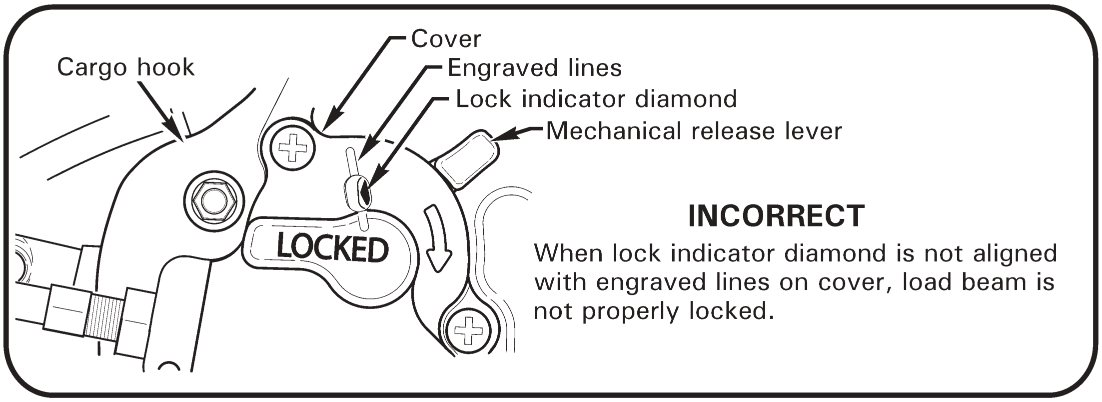

FIGURE 25-3 LOCK INDICATOR

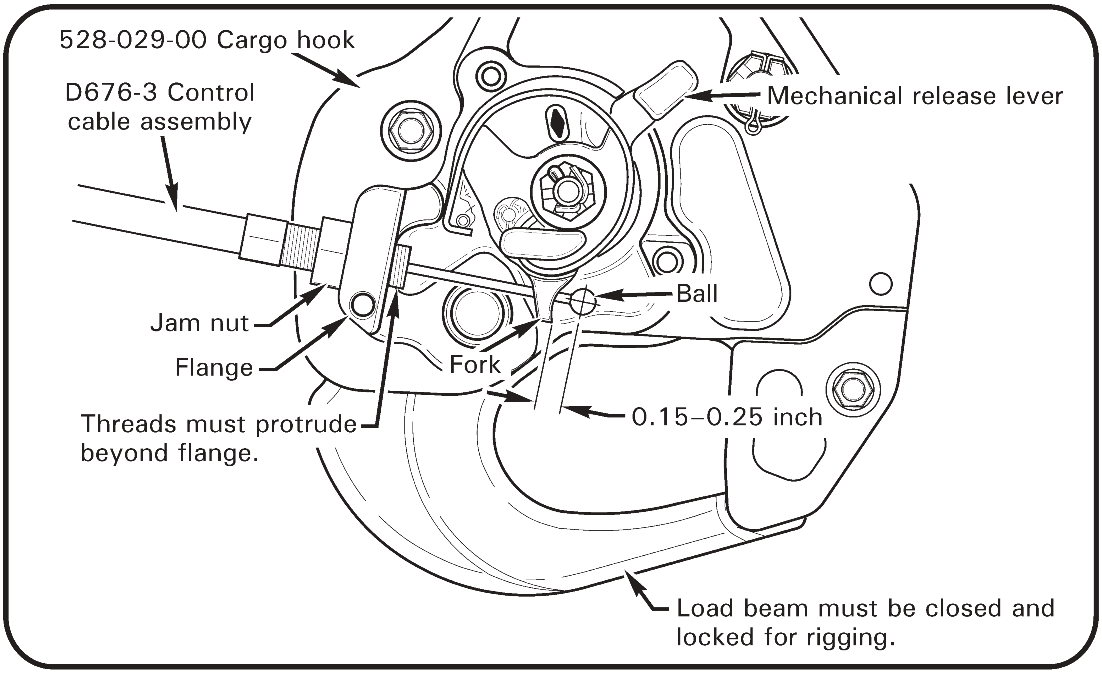

FIGURE 25-4 MECHANICAL RELEASE CONTROL RIGGING
(Shown with cover removed)

25-75 Mechanical Cargo Hook Release Control Rigging

CAUTION

Cargo hook load beam must be closed and locked when rigging mechanical release control.

1. Verify HOOK RELEASE knob adjacent to collective stick is positioned full down. Verify cargo hook load beam is closed and locked.
2. If not previously accomplished, remove screws securing (mechanical release) cover to 528-029-00 cargo hook and remove cover.
3. Refer to Figure 25-4. If not previously accomplished, connect D676-3 (control) cable assembly's ball to mechanical release's fork. Rotate release lever clockwise to remove free play (lock indicator will begin to move) and measure gap between fork and ball as shown.
4. Adjust gap as required to obtain measurement between 0.15–0.25 inch. To adjust gap:
   a. Disconnect cable assembly's ball from release lever assembly's fork.
   b. Remove cotter pin (if installed), castellated nut, washers, and bolt (G132-1) or load cell (G132-2 or G132-4) securing hook to hard point's D136-2 support. Remove hook.
   c. Thread or unthread hook onto cable as required to meet gap dimensions. Verify threads protrude beyond plate flange.
   d. Reassemble hook to hardpoint per § 25-73 Part C step 3.
   e. Repeat steps 3 and 4.
5. Special torque jam nut to 80 in.-lb. Install screws securing release lever assembly's cover to hook. Verify security.
6. Finish hook installation per § 25-73 Part C steps 6 thru 10.

25-76 Load Cell and Meter

A. Schematic

Refer to Figure 98-29 for cargo hook wiring schematic.

B. Removal

Load Cell

Remove load cell per § 25-73 Part B steps 1 thru 3. Insert thru bolt temporarily to support cargo hook while load cell is removed. Remove G140-7 harness assembly as required; do not adjust control cable.

Load Meter

1. Turn battery switch off & pull out (10 amp) HOOK RELEASE circuit breaker on circuit breaker panel.
2. Remove hardware securing G135-5 cover (copilot installation only) and G138 face to F353 panel and remove face with attached 210-095-00 load meter.
3. Disconnect G140-2 (RH or LH Solo PIC) or G140-8 (RH Solo PIC) harness assembly from load meter. Remove hardware securing load meter to face and remove load meter.

C. Installation

Load Cell

1. Install G140-7 harness assembly if removed; loop A215-149 o-ring around harness and D676-3 (control) cable assembly. Install ty-raps as required; cinch ty-raps until snug without over-tightening, and trim tips flush with heads.
2. Remove temporary thru bolt & install load cell per § 25-73 Part C steps 4 thru 10.

Load Meter

1. Turn battery switch off & pull out (10 amp) HOOK RELEASE circuit breaker on circuit breaker panel.
2. Install hardware securing 210-095-00 load meter to G138 face. Connect G140-2 (RH or LH Solo PIC) or G140-8 (RH Solo PIC) harness assembly to load meter. Verify security.
3. Install hardware securing face with attached load meter to F353 panel; install hardware securing G135-5 cover (copilot installation only) to face and panel. Verify security.

D. Scheduled Inspections

Refer to § 25-73 Part D for scheduled inspections.

E. Special Inspections

Refer to Onboard Systems Owners Manual C-39 Indicator Document No. 120-095-00 available for download on their website at www.onboardsystems.com.

25-77 Left-Seat Instruments

A. Schematic

Refer to Figure 98-31 for copilot instruments installation wiring schematic.

B. Removal

1. Turn battery switch off and pull out (10 amp) HOOK RELEASE circuit breaker on circuit breaker panel.
2. Remove hardware securing G135-5 cover and G138-4 face to F353-1 panel and remove face with attached F600-2 torquemeter and T1221MK900C010 MGT gage (and 210-095-00 load meter).
3. Disconnect G140 harness assembly from torquemeter and/or MGT gage, as required. Remove hardware securing torquemeter and/or MGT gage to face, as required, and remove torquemeter and/or MGT gage.

C. Installation

1. Turn battery switch off and pull out (10 amp) HOOK RELEASE circuit breaker on circuit breaker panel.
2. Install hardware securing F600-2 torquemeter and T1221MK900C010 MGT gage to G138-4 face. Connect G140 harness assembly to torquemeter and/or MGT gage, as required. Verify security.
3. Install hardware securing face with attached torquemeter and MGT gage (and 210-095-00 load meter) to F353-1 panel; install hardware securing G135-5 cover to face and panel. Verify security.

D. Scheduled Inspections

Refer to § 5-45 100-Hour/Annual inspection.

E. Special Inspections

Refer to § 95-25 Part F for torquemeter and § 95-31 Part F for MGT gage special inspections.

25-78 Doors with Bubble Windows and Fans

A. Schematic

Refer to Figure 98-32 for bubble door fans installation wiring schematic.

B. Removal

Bubble Door

1. Turn battery switch off and pull out AUX PWR (10 amp) circuit breaker on circuit breaker panel.
2. Disconnect D580 fan assembly wiring from G140-9 harness assembly at connectors.
3. Refer to § 52-10. Pull D573-4 rod up and off of arm assembly ball joint.
4. Remove rings from door hinge pins, lift pins up from door frame hinge assemblies, and remove door.
5. Perform weight and balance for doors off operation per Part E as required.

Fan Assembly

1. Turn battery switch off and pull out AUX PWR (10 amp) circuit breaker on circuit breaker panel.
2. Disconnect D580 fan assembly wiring from G140-9 harness assembly at connectors.
3. Remove hardware securing fan assembly to door stiffener and remove fan.

C. Installation

Bubble Door

WARNING
Failure to install a ring in each door's two hinge pins may allow door to depart aircraft in flight.

1. Turn battery switch off and pull out AUX PWR (10 amp) circuit breaker on circuit breaker panel.
2. Refer to § 52-10. Align and insert door hinge pins in door frame hinge assemblies.
3. Align D573-4 rod with arm assembly ball joint and push down to lock.
4. Install rings in door hinge pins.
5. Connect D580 fan assembly wiring to G140-9 harness assembly at connectors; verify security.
6. Push in AUX PWR (10 amp) circuit breaker on circuit breaker panel and turn battery switch on. Verify proper operation of fan. Turn battery switch off.
7. Perform weight and balance for doors on operation per Part E as required.

25-78 Doors with Bubble Windows and Fans (continued)

C. Installation (continued)

Fan Assembly

1. Turn battery switch off and pull out AUX PWR (10 amp) circuit breaker on circuit breaker panel.
2. Install hardware securing fan assembly to door stiffener; verify security.
3. Connect D580 fan assembly wiring to G140-9 harness assembly at connectors; verify security.
4. Push in AUX PWR (10 amp) circuit breaker on circuit breaker panel and turn battery switch on. Verify proper operation of fan. Turn battery switch off.

D. Scheduled Inspections

Refer to § 5-45 100-Hour/Annual inspection.

E. Configurations for Flight

1. Door(s) Off Operation

a. Remove bubble door(s) per Part B.

b. Revise Weight and Balance Record in R66 Pilot's Operating Handbook (POH) Section 6 to incorporate the following data:

Right Door Subtract:

Weight	Long. Arm	Long. Moment	Lat. Arm	Lat. Moment
Weigh door (lb)	49.50 in.	(Weight x Long. Arm)	26.80 in.	(Weight x Lat. Arm)

Left Door Subtract:

Weight	Long. Arm	Long. Moment	Lat. Arm	Lat. Moment
Weigh door (lb)	49.50 in.	(Weight x Long. Arm)	–26.80 in.	(Weight x Lat. Arm)

2. Door(s) On Operation

a. Install bubble door(s) per Part C.

b. Revise Weight and Balance Record in R66 Pilot's Operating Handbook (POH) Section 6 to incorporate the following data:

Right Door Add:

Weight	Long. Arm	Long. Moment	Lat. Arm	Lat. Moment
Weigh door (lb)	49.50 in.	(Weight x Long. Arm)	26.80 in.	(Weight x Lat. Arm)

Left Door Add:

Weight	Long. Arm	Long. Moment	Lat. Arm	Lat. Moment
Weigh door (lb)	49.50 in.	(Weight x Long. Arm)	–26.80 in.	(Weight x Lat. Arm)

25-79 Skid-Mounted Mirrors

A. Removal

1. Remove bolt and lock washer securing 97819 mirror to G138 strap & remove mirror.
2. As required, remove screws securing G138 support to skid tube & remove support.
3. Configure helicopter for flight with skid-mounted mirrors removed per Part D as required.

B. Installation

1. If removed, install screws securing G138 support to skid tube. Verify security.
2. Install bolt and (new) lock washer securing 97819 mirror to G138 strap. Special torque bolt to 150 in.-lb and torque stripe per Figure 5-1.
3. Configure helicopter for flight with skid-mounted mirrors installed per Part D as required.

C. Scheduled Inspections

Every 100 hour/annual inspection: Inspect straps for security and any evidence of cracking or corrosion. Inspect mirrors for cracks, cleanliness, and clarity.

D. Configurations for Flight

1. Configuration for flight with skid-mounted mirror(s) removed
   a. Remove skid-mounted mirror(s), including G138 support(s) per Part A.
   b. Reinstall screws in skid tube(s) to prevent debris and moisture from entering tube(s).
   c. Revise Weight and Balance Record in R66 Pilot's Operating Handbook (POH) Section 6 to incorporate the following data:

Right Skid-Mounted Mirror Subtract:

Weight	Long. Arm	Long. Moment	Lat. Arm	Lat. Moment
0.80 lb	32.00 in.	25.60 in.-lb	41.00 in.	32.80 in.-lb

Left Skid-Mounted Mirror Subtract:

Weight	Long. Arm	Long. Moment	Lat. Arm	Lat. Moment
0.80 lb	32.00 in.	25.60 in.-lb	−41.00 in.	−32.80 in.-lb

25-79 Skid-Mounted Mirrors (continued)

D. Configurations for Flight (continued)

2. Configuration for Flight with Skid-Mounted Mirror(s) Installed

   a. Remove screws from skid tube(s) and install skid-mounted mirror(s) per Part B.

   b. Revise Weight and Balance Record in R66 Pilot's Operating Handbook (POH) Section 6 to incorporate the following data:

Right Skid-Mounted Mirror Add:

Weight	Long. Arm	Long. Moment	Lat. Arm	Lat. Moment
0.80 lb	32.00 in.	25.60 in.-lb	41.00 in.	32.80 in.-lb

Left Skid-Mounted Mirror Add:

Weight	Long. Arm	Long. Moment	Lat. Arm	Lat. Moment
0.80 lb	32.00 in.	25.60 in.-lb	–41.00 in.	–32.80 in.-lb

25-80 Cabin Interior Hardpoint Installation

A. Removal

Peel back headliner and remove hardware securing G949-2 ring to F087-1 frame; remove ring.

B. Installation

Peel back headliner and install hardware securing G949-2 ring to F087-1 frame. Standard torque fasteners per § 20-32 and torque stripe per Figure 5-1. Position seam of grommet at top of hole, in-line with middle fastener.

25-81 Arm Rest

NOTE

Flight with G135-7 support assembly & 2454K71KNOB removed is permissible. No change to helicopter weight and balance.

A. Removal

Remove 2454K71KNOB knob. Remove hardware securing G135-7 support assembly to G135-8 cover assembly and remove support.

B. Installation

Position G135-7 support assembly on G135-8 cover assembly and install hardware; verify security. Install 2454K71KNOB knob. Verify proper operation; position support as desired and tighten knob.

25-90 Cyclic Guard

> NOTE
>
> Flight with handle assembly & mounting hardware removed or with handle in either position is permissible.

A. Description

The optional cyclic guard is a bar that extends from the inboard corner of the left front seat to the instrument console. It is intended to act as a barrier to help prevent inadvertent interference with the cyclic control. The guard also provides a hand grip for a passenger's right hand.

In order to access the under seat compartment with the guard installed, pull the silver spring knob at the forward end of the guard and allow the aft end to rotate down away from the seat hinge. To re-secure the guard, lift the aft end and allow the spring knob to lock back in place.

It is recommended that the guard be installed whenever a non-pilot passenger occupies the left front seat. A pilot flying from the left seat may find that the guard contacts the right leg when feet are on the pedals. The guard should be removed prior to flight if the pilot finds it objectionable.

B. Removal

1. Extend G721-1 guard assembly into upper position and remove hardware securing guard to left hand forward seat. Pull plunger and slide guard forward out of G722-6 plate.
2. Open console assembly (ref. § 95-50). Remove hardware securing plate to lower console and remove plate.

C. Installation

1. Open console assembly (ref. § 95-50). Position G722-6 plate on lower console and install hardware; verify security. Close and secure console.
2. As required, install 56-99-196-20 plunger in G721-1 guard assembly; install supplied sleeve wet with B270-11 adhesive and special torque to 25 in.-lb.
3. Pull plunger, insert guard assembly in plate and slide aft. Extend guard assembly into upper position and install hardware securing G722-5 mounts to left hand forward seat. Verify security.
4. Actuate guard assembly and verify proper operation. As required, adjust set screw in plate to reduce forward/aft play (plunger must fully engage).

D. Scheduled Inspections

Refer to § 5-45 100-Hour/Annual Inspection.

CHAPTER 28

FUEL SYSTEM

Section *Title* *Page*

28-00 Description 28.1
28-10 Bladder Assembly 28.3
28-11 Rollover Valves 28.5
28-12 Sump Valve 28.6
28-20 Fuel Quantity 28.7
28-21 Fuel Quantity Sender 28.7
28-22 Low-Fuel Switch Assembly 28.10
28-23 Fuel Flow Meter Installation 28.11A
28-30 Fuel Valve 28.13
28-31 Fuel Valve Control Rigging 28.13
28-40 Fuel Flow Check 28.14
28-50 Aux Fuel System 28.17
28-51 Tank Assembly 28.18
28-52 Support Assembly 28.20
28-53 Bladder 28.21
28-54 Fuel Quantity Sender 28.25
28-55 Pump Assembly 28.25
28-60 Pressure Fueling System 28.29
28-61 A521 (Fuel Quantity) Switch Assemblies 28.31
28-62 D745-7 (Fuel Pressure) Switch Assemblies 28.33
28-63 G987-1 (Fuel Port) Valve Assembly 28.35
28-64 G990-4 (Proximity) Sensor Assembly 28.36
28-65 G992-1 Shut-off Valve Assemblies 28.39
28-66 Residual Fuel Removal 28.41
28-67 Maintenance 28.42

Intentionally Blank

CHAPTER 28

FUEL SYSTEM

28-00 Description

A single bladder-type crash-resistant fuel cell supplies fuel via gravity flow to the engine. The fuel cell incorporates vent fittings, a filler port, a fuel gage sender, a low-fuel sender, a sump drain, and a finger strainer at the fuel outlet.

The low-fuel sender is a float switch which activates the LOW FUEL annunciator, indicating approximately five gallons of usable fuel remaining. On later aircraft, a second float switch activates the <12 GAL FUEL annunciator, indicating approximately 12 gallons of usable fuel remaining. At moderate to high power settings, the 12 gallon annunciator will illuminate approximately 15 to 20 minutes prior to the LOW FUEL annunciation.

> NOTE
>
> Due to fuel tank geometry, the level at which the <12 GAL FUEL annunciator illuminates varies with helicopter pitch and roll attitude and is therefore affected by helicopter CG. 12 gallon annunciation is accurate in a level attitude but may be inaccurate by as much as four gallons if helicopter is loaded to CG limits. Aft, left loadings cause annunciation with less than 12 gallons remaining and forward, right loadings cause annunciation with more than 12 gallons remaining.

The fuel cell is secured inside an aluminum structure. The filler cap is located under a cowl door. The left and right vent fittings are interconnected and are vented though two risers within the mast fairing. The vent fittings each have a rollover valve to prevent fuel leakage in any attitude. A fuel valve is located on the forward side of the firewall and is controlled by a push-pull cable control at the base of the pilot's collective stick.

The engine incorporates a fuel pump assembly with an inlet filter. A differential pressure switch illuminates the FUEL FILTER annunciator if the filter becomes contaminated.

A single drain allows fuel sampling from the low point in the fuel cell. The drain tube is accessible via a left side cowl door. The drain is opened by extending the plastic tube clear of the aircraft and pushing up on the drain. On later helicopters, a glass tube stowed inside the upper left cowl door is provided which may be used to catch fuel samples.

Refer to § 28-50 for optional aux fuel tank installation system description.

Refer to § 28-60 for optional pressure fueling system installation system description.

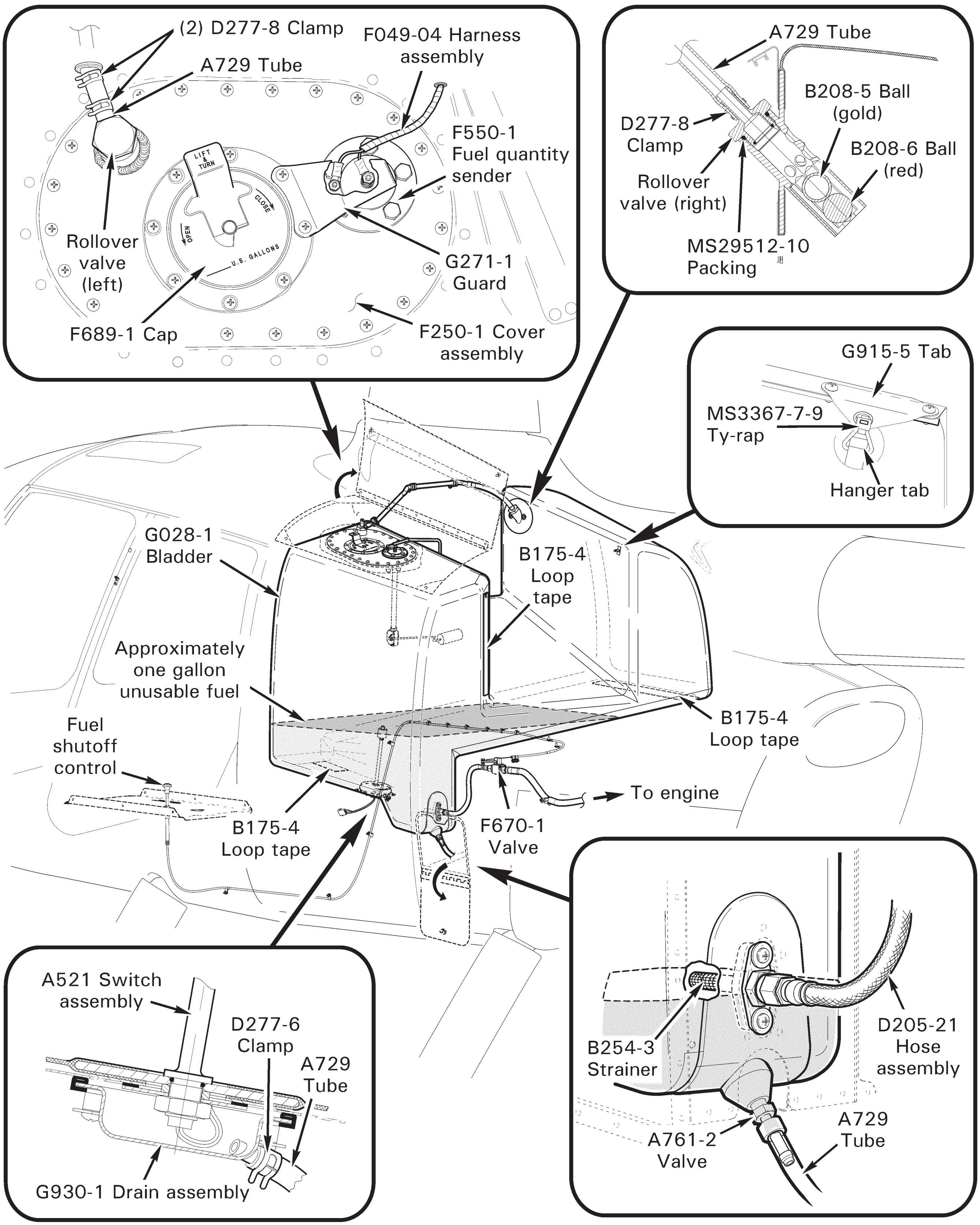

FIGURE 28-1 MAIN FUEL SYSTEM (STANDARD)

28-10 Bladder Assembly

CAUTION

G028-1 bladder assembly temperature should be above 65°F before removing, installing, or flexing bladder.

A. Removal

1. Defuel helicopter per § 12-42.
2. Remove tailcone cowling assembly per § 53-23.
3. Remove fuel quantity sender per § 28-21.
4. Refer to Figure 28-1. Remove D277-8 clamps or cut and discard safety wire securing A729 tube to left rollover valve and pull tube off of valve. Remove screws securing F250-1 cover assembly to G028-1 bladder assembly and F028-1 support assembly and remove cover. Remove and discard o-ring.
5. Remove D277-8 clamp or cut and discard safety wire securing A729 tube to right rollover valve and pull tube off of valve. Remove screws and washers securing valve to bladder and support. Cut and discard ty-rap securing 35486 hanger tab to G915-5 tab.
6. Remove low-fuel switch assembly per § 28-22. Tape bladder openings.
7. Disconnect D205-21 (fuel outlet) hose assembly from B254-3 strainer and cap fittings. Remove screws and washers securing strainer to bladder and support. Remove strainer and tape bladder opening.
8. Remove sump valve per § 28-12.
9. Remove hardware securing G004-4 (right side, aft fuselage) skin to cabin and remove skin. Detach bladder hook tape from support loop tape, and remove bladder through right side opening.

28-10 Bladder Assembly (continued)

B. Installation

1. Refer to Figure 28-1. Dust exterior of G028-1 bladder assembly and F028-1 support assembly floor with talcum powder to facilitate bladder slippage along metal surface. Do not allow powder to enter bladder.
2. Note locations of hook and loop tape on bladder lower surface and support floor. Orient bladder, fold into thirds, place in center of support, and unfold into position.
3. Apply light coat A257-9 anti-seize to screw threads and install screws and washers securing right rollover valve to bladder and support; verify security. Secure A729 tube to valve using D277-8 clamp; verify security.
4. Install (new) MS3367-7-9 ty-rap securing 35486 hanger tab to G915-5 tab. Cinch ty-rap until snug without over-tightening, and trim tip flush with head.

NOTE

Verify bladder is free of wrinkles across lower surface and properly located before attaching hook and loop tape. Bladder may be pressurized with air to 1 psi max to assist installation.

CAUTION

Avoid contaminating bladder assembly interior. Cover arms with sleeves and use lint-free gloves when working inside bladder.

5. Remove tape from bladder assembly openings. Insert a clean, smooth, blunt wooden dowel through bladder's fuel port opening and press on bladder lower surface to attach hook and loop tape. Verify security.
6. Install low-fuel switch assembly per § 28-22.
7. Apply light coat A257-9 anti-seize to screw threads and install screws and washers securing bladder outlet to support. Lubricate new MS29512-06 packing using A257-6 grease and install on B254-3 strainer. Install strainer in bladder and special torque strainer per § 20-33.
8. Remove caps and connect D205-21 hose assembly to strainer. Using backup wrench, special torque hose nut per § 20-33, and torque stripe per Figure 5-1.
9. Install sump valve per § 28-12.
10. Lubricate (new) MS29513-270 packing using A257-6 grease and install packing in recess at bladder's fuel port opening. Apply light coat A257-9 anti-seize to screw threads and install screws securing F250-1 cover assembly to bladder and support; verify security. Secure A729 tube to left rollover valve using D277-8 clamps; verify security.
11. Install fuel quantity sender per § 28-21.

28-10 Bladder Assembly (continued)

B. Installation (continued)

12. Service helicopter with minimum two gallons fuel per § 12-41. Verify no leaks, especially at bladder outlets. Install G004-4 (right side, aft fuselage) skin and install hardware securing skin to cabin; verify security.
13. Perform fuel flow check per § 28-40.
14. Install tailcone cowling assembly per § 53-23.

28-11 Rollover Valves

WARNING

Orientation of rollover valve balls is critical to valve operation. The gold ball on top (earlier ball on top was blue) floats and seals the vent in the event of inadvertent over-filling or in-flight sloshing. The red ball on bottom presses the top ball against the vent seat if the aircraft is inverted.

A. Packing Replacement and Valve Inspection

1. Remove tailcone cowling assembly per § 53-23, as required.
2. Refer to Figure 28-1. Remove D277-8 clamp(s) or cut and discard safety wire securing A729 tube to rollover valve and pull tube off of valve.
3. Remove G254-2 fitting or G254-6 retainer. Remove and discard MS29512-10 packing (G254-2 fitting only) and A215-015 o-ring.
4. Carefully remove B208-5 and B208-6 balls using a suction cup attached to a syringe. Inspect condition of balls, valve body, and fitting or retainer. Clean parts and verify no nicks, scratches, gouges, dents, cracks, or corrosion.
5. Carefully install B208-6 ball (red, solid) on bottom and B208-5 ball (gold or blue, hollow) on top in valve body using a suction cup attached to a syringe.
6. Install new A215-015 o-ring in groove inside fitting or retainer. Lubricate new MS29512-10 packing using A257-6 grease and install over G254-2 fitting threads.
7. Install fitting or retainer and special torque per § 20-33.
8. Secure A729 tube to valve using D277-8 clamp; verify security.
9. Install tailcone cowling assembly per § 53-23, as required.

28-12 Sump Valve

A. Removal

1. Defuel helicopter per § 12-42.
2. Refer to Figure 28-1. Cut and discard safety wire (if installed) securing A729 tube to A761-2 or 1250H (sump) valve and remove tube.
3. Remove valve from G154-1 outlet assembly; tape bladder opening.
4. Actuate and lock valve to expose stem; remove and discard o-ring.

B. Installation

1. Actuate and lock A761-2 or 1250H (sump) valve to expose stem; install (new) o-ring in stem seat.
2. Refer to Figure 28-1. Lightly coat valve threads using B270-6 sealant. Remove tape and install valve in bladder outlet. Special torque A761-2 valve per § 20-33, or standard torque 1250H valve per § 20-32, and torque stripe per Figure 5-1.
3. Secure A729 to valve stem. Note: safety wire is not required.
4. Service helicopter with minimum two gallons fuel per § 12-41. Verify no leaks.

28-20 Fuel Quantity

28-21 Fuel Quantity Sender

CAUTION

Avoid contaminating bladder interior. Cover arms with sleeves and use lint-free gloves when working inside bladder.

A. Removal

1. Turn battery switch off and pull out (2 amp) GAGES circuit breaker at panel.
2. a. Main tank: Refer to Figure 28-1. Remove screws securing G271-1 guard to F250 cover assembly and remove guard.

   b. Aux tank: Pull out (5 amp) AUX FUEL PUMP circuit breaker at panel. Remove screws securing G271-1 guard to G759 cover assembly and remove guard.

CAUTION

Rotation of fuel sender center stud or base nut is not permitted.

3. a. Main tank: Using a backup wrench, remove hardware securing F049-04 harness assembly to F550-1 fuel quantity sender.

   b. Aux tank: Disconnect G768 harness assembly from airframe harness and G759 cover assembly at connectors.
4. Remove bolts securing fuel sender to cover assembly. Carefully pull fuel sender lever through opening. Tape bladder opening.

B. Installation

1. Perform fuel sender check per Part C.
2. Turn battery switch off and pull out (2 amp) GAGES circuit breaker at panel.
3. a. Main tank: Refer to Figure 28-1. Remove tape and carefully lower F550-1 fuel quantity sender lever through F250-1 cover assembly opening.

   b. Aux tank: Pull out (5 amp) AUX FUEL PUMP circuit breaker at panel. Remove tape and carefully lower F550-2 (large tank) or F550-3 (small tank) fuel quantity sender lever through G759 cover assembly opening.
4. Install bolts securing fuel sender to cover assembly. Special torque bolts in criss-cross pattern per § 20-33 and torque stripe per Figure 5-1.

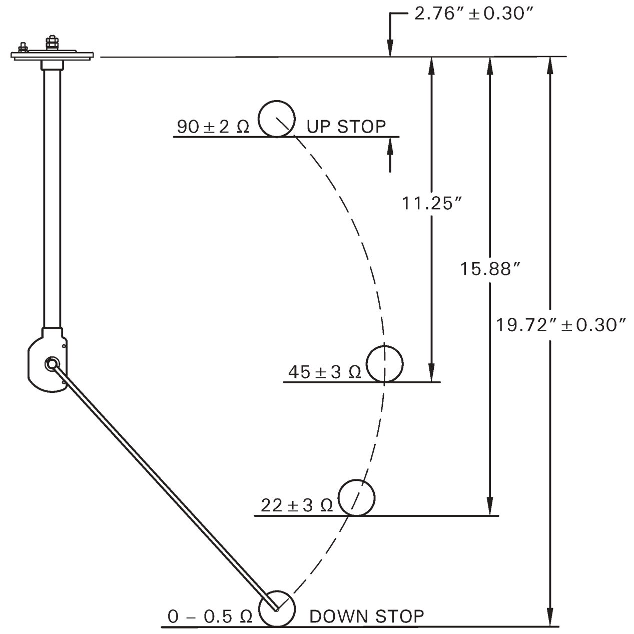

F550-1 Fuel Quantity Sender (Main Tank)

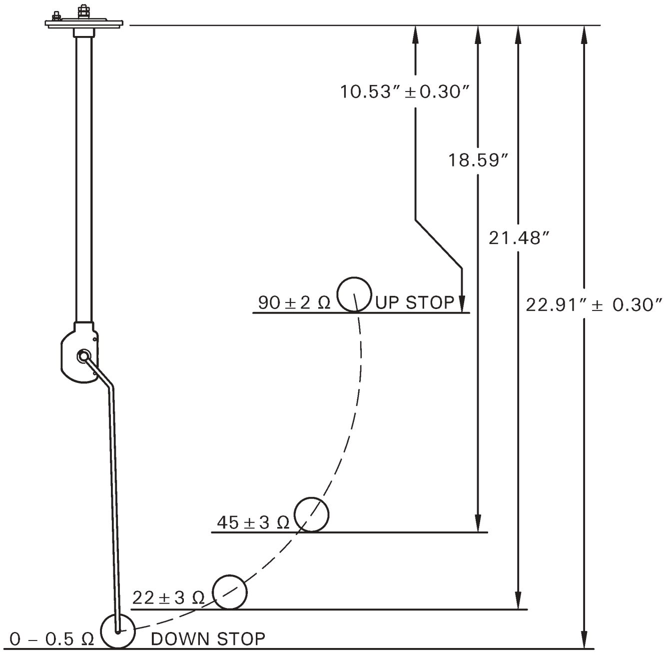

F550-2 Fuel Quantity Sender (Large Aux Tank)

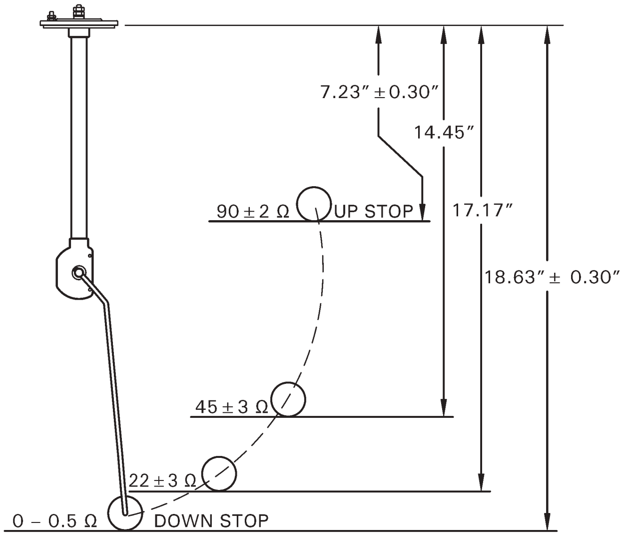

F550-3 Fuel Quantity Sender (Small Aux Tank)

FIGURE 28-2 FUEL SENDER CHECK

28-21 Fuel Quantity Sender (continued)

B. Installation (continued)

CAUTION

Rotation of fuel sender center stud or base nut is not permitted.

5. a. Main tank: Using a backup wrench, install hardware securing F049-04 harness assembly to fuel sender. Special torque nuts per § 20-33, standard torque palnuts per § 20-32, and torque stripe per Figure 5-1.

   b. Aux tank: Connect G768 harness assembly to G759 cover assembly and airframe harness at connectors. Verify security.

6. Apply light coat A257-9 anti-seize to threads and install screws securing G271-1 guard to cover assembly. Verify security.

7. Perform fuel indication check per Part D.

C. Fuel Sender Check

1. Remove fuel sender per Part A.

2. Simulate mounting position of appropriate F550 fuel quantity sender per Figure 28-2. Position float arm as shown and measure the resistance with a multimeter. Verify resistance is within tolerance at each noted height.

3. If resistance is out of tolerance at any height, bend float arm up for a fuel sender with excessive resistance, or bend float arm down for a fuel sender with too little resistance. Repeat steps until fuel sender resistance is within tolerance.

4. Install fuel sender per Part B.

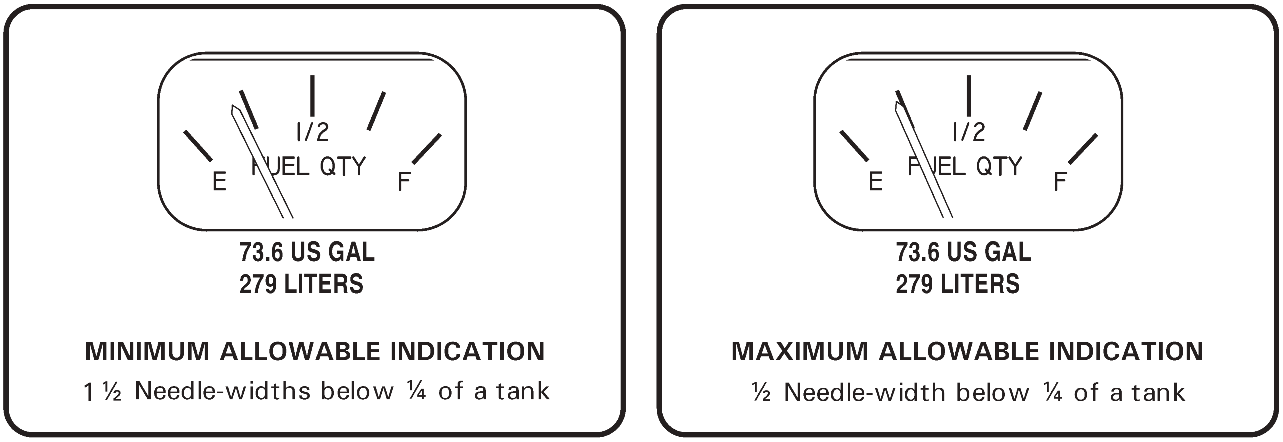

FIGURE 28-3 FUEL INDICATION CHECK

28-21 Fuel Quantity Sender (continued)

D. Fuel Indication Check

1. a. Main bladder fuel indication check: Defuel main bladder per § 12-42.

   b. Aux tank fuel indication check: Verify main bladder has no more than 65 gallons fuel; defuel main bladder per § 12-42, as required.

2. Pull fuel valve into off position.

3. a. Main bladder fuel indication check: Fuel main bladder with 19.4 gallons ± 0.5 gallon per § 12-41.

   b. Aux tank fuel indication check: Fuel aux tank with 10.1 gallons ± 0.5 gallon (large tank) or 5.9 gallons ± 0.5 gallon (small tank) per § 12-41.

4. Refer to Figure 28-3. Push in (2 amp) GAGES circuit breaker at panel and turn battery switch on. (Press QUANTITY button on aux fuel control panel for aux tank quantity, displayed on fuel quantity gage.) Verify gage reads one-half needle width to one & one-half needle widths below one-quarter mark. If fuel gage indication is correct, proceed to step 6.

5. If fuel gage indication is incorrect, remove fuel quantity sender per Part A. Slightly bend sender lever up for a gage that reads too high, or down for a gage that reads too low. Install fuel quantity sender per Part B.

6. Turn battery switch off and push fuel valve into on position.

Intentionally Blank

28-22 Low-Fuel Switch Assembly

> **CAUTION**
>
> Avoid contaminating bladder interior. Cover arms with sleeves and use lint-free gloves when working inside bladder.

A. Schematic

Refer to Figure 98-1 or 98-2 for (single) low fuel warning installation wiring schematic.

Refer to Figure 98-33 for (dual) low fuel warning installation wiring schematic.

B. Removal

1. Defuel helicopter per § 12-42.
2. Open baggage compartment door. Remove G248 (battery compartment) cover.
3. Refer to Figure 28-1. Remove D277-6 clamp or cut and discard safety wire securing A729 tube to G930-1 drain assembly. Remove screws securing G930-4 retainer and drain assembly to G250-1 sump tray.
4. Remove fuel cap. Carefully capture A521-2 (single) or A521-4 (dual) switch assembly body with clean mechanical fingers (avoid capturing float).
5. Inside baggage compartment, remove nut, washer assembly, and spacer securing switch assembly to tray. Disconnect F049 harness assembly from switch assembly at connectors; extract switch assembly pins from housing.
6. Carefully pull switch assembly through (fuel cap) opening, avoiding fuel sender. Install fuel cap and tape bladder opening.

C. Installation

1. Lubricate (new) MS29512-05 packing with A257-6 grease and install packing over switch assembly threads.
2. Refer to Figure 28-1. Remove fuel cap. Tape A521-2 (single) or A521-4 (dual) switch assembly wiring to 4-ft length of lockwire; insert other end of wire through fuel cap opening and through switch assembly opening. Carefully grip switch assembly body with mechanical fingers and lower switch assembly to bottom of bladder. Inside baggage compartment, remove tape, guide wiring through opening, and install spacer, washer assembly, and nut securing switch assembly to G250-1 sump tray. Special torque nut per § 20-33 and torque stripe per Figure 5-1. Remove tape and lockwire. Release and remove mechanical fingers, and install fuel cap.
3. Assemble switch assembly pins in housing per Figure 98-1; connect F049 harness assembly to switch assembly at connectors. Fit wiring through gap in G930-1 drain assembly seal; install G930-4 retainer and screws securing retainer and drain assembly to tray. Verify security. Seal gap in drain assembly seal where wires pass thru using B270-5 sealant.

28-22 Low-Fuel Switch Assembly (continued)

C. Installation (continued)

4. Secure A729 tube to drain assembly using D277-6 clamp; verify security.
5. Perform operation check per Part D.

D. Operation Check

1. Service helicopter with 7 gallons fuel per § 12-41.
2. If not previously accomplished, remove G248 (battery compartment) cover. Verify no leaks around switch assembly. Open sump drain access door and verify no leaks from (low-fuel switch) drain tube.
3. Turn battery switch on.
4. Remove fuel cap. Insert a clean, non-sparking rod through (fuel cap) opening and gently depress A521 switch assembly's float (lower float, if dual switch is installed); verify LOW FUEL annunciator segment illuminates.
5. Dual switch only: Remove rod. Service helicopter with additional 5 gallons fuel (12 gallons total) per § 12-41. Insert clean, non-sparking rod through opening and gently depress switch assembly's upper float; verify <12 GAL FUEL light illuminates.
6. Remove rod and install fuel cap.
7. Turn battery switch off.
8. Secure access doors and install battery compartment cover; verify security.

E. Scheduled Maintenance

Every 12 Months: Perform operation check per Part D.

28-23 Fuel Flow Meter Installation

A. Description

The fuel flow meter installation consists of a fuel flow transducer installed in the engine fuel line, and a fuel flow signal adapter installed behind the left rear seatback on the cabin bulkhead. The output signal from the adapter provides fuel information including flow rate, calculated fuel remaining, and fuel range rings on either Garmin GTN-series or Avidyne IFD-series moving-map navigation displays.

The fuel flow meter transducer is installed between the engine fuel control unit (FCU) and an engine fuel check valve. A short, rigid fuel line is installed between the transducer and the FCU. A longer, rigid fuel line (delivered with the helicopter), may be installed to put the engine in its original configuration.

Fuel gages and low fuel warning light(s) are independent of the fuel flow meter installation and are the primary indicators of fuel quantity. Fuel flow meter data is for electronic display purposes only.

B. Schematic

Refer to Figure 98-33 for fuel flow meter installation electrical schematic.

C. Removal

Transducer

1. Remove engine cowling assembly per § 53-21.
2. Turn battery & avionics switches off and pull out GPS (5 amp) circuit breaker on panel. Pull fuel shut off valve off.
3. Disconnect airframe harness electrical connector from 660534HR-01 transducer assembly.
4. Refer to Rolls-Royce OMM Task 73-00-00-000-801 and observe precautions. Place a drip pan under the engine to catch fuel leakage.
5. Remove hardware securing G155-1 (aft) and G155-2 (forward) brackets to engine horizontal shield assembly. Remove hardware securing forward bracket to transducer and remove bracket.
6. Loosen nuts securing fuel tube and transducer sub-assembly to fuel control unit and check valve using back-up wrench. Remove transducer sub-assembly and engine nut, washers, and G155-1 aft bracket; discard AS4824N0 seals. Cap and plug all open fittings.
7. Further disassemble parts from transducer as required; discard AS4824N08 seals.
8. As required, install the fuel check valve per Rolls-Royce OMM Task 73-11-15-400-801. Install fuel control-to-check valve fuel tube per OMM Task 73-00-00-420-005; install new AS4824N04 seals.

28-23 Fuel Flow Meter Installation (continued)

C. Removal (continued)

Adapter

1. Remove aft left back rest assembly per § 25-22.
2. Turn battery & avionics switches off and pull out GPS (5 amp) circuit breaker on panel.
3. Disconnect airframe harness electrical connector from AIS-380 adapter.
4. Remove hardware securing adapter to cabin bulkhead and remove adapter.

D. Installation

Transducer

1. Configure AIS-380 adapter if a replacement adapter or 660534HR-01 transducer assembly was installed per Part E.
2. Turn battery & avionics switches off and pull out GPS (5 amp) circuit breaker on panel.
3. Refer to Rolls-Royce OMM Task 73-00-00-400-801 and observe precautions. Place a drip pan under the engine to catch fuel leakage.
4. As required, remove fuel control-to-check valve fuel tube per Rolls-Royce OMM Task 73-00-00-990-805; discard AS4824N04 seals. Refer to Rolls-Royce OMM Task 73-11-15-000-801; remove hardware securing fuel check valve to horizontal fireshield.
5. Remove caps and plugs from fittings. Assemble engine washers, G155-1 (aft) bracket, engine nut, new (2) AS4824N04 seals, SS6565-8-4 (reducer) fitting, new (2) AS4824N08 seals, 660534HR-01 transducer assembly, and 564601 tube assembly between fuel check valve and fuel control unit. Install hardware securing G155-2 (forward) bracket to transducer and tighten screws; install hardware securing G155 brackets to horizontal fireshield finger tight. Verify proper alignment with aft bracket; relocate engine-supplied washers as required.
6. Special torque engine-supplied nut to fuel check valve per § 20-33; special torque SS6565-8-4 fitting to fuel check valve per § 20-33; special torque SS6565-8-4 fitting to transducer per § 20-33; special torque 564601 tube assembly to transducer per § 20-33; special torque 564601 tube assembly to fuel control unit per § 20-33. Tighten hardware securing G155 brackets to horizontal fireshield. Verify security.
7. Connect airframe harness electrical connector to transducer assembly; verify security.
8. Push in GPS circuit breaker (5 amp) on panel. Turn battery & avionics switches on.

28-23 Fuel Flow Meter Installation (continued)

D. Installation (continued)

Transducer (continued)

9. Perform appropriate functional checks per Garmin GTN-series or Avidyne IFD-series moving-map navigation display Pilot's Guide.
10. Install engine cowling assembly per § 53-21.

Adapter

1. Configure AIS-380 adapter if a replacement adapter or 660534HR-01 transducer assembly was installed per Part E.
2. Turn battery & avionics switches off and pull out GPS (5 amp) circuit breaker on panel.
3. Install hardware securing adapter to cabin bulkhead; verify security.
4. Connect airframe harness electrical connector to adapter; verify security.
5. Push in GPS circuit breaker (5 amp) on panel. Turn battery & avionics switches on.
6. Perform appropriate functional checks per Garmin GTN-series or Avidyne IFD-series moving-map navigation display Pilot's Guide.
7. Install aft left back rest assembly per § 25-22.

E. Configuration

Configure AIS-380 fuel flow adapter per Shadin Avionics M833811-01 Installation Manual Section 5.

Make the following selections for R66 installation:

Field	Selection
Serial Port	Autopopulated (may change depending on connection point to PC)
ARINC	Leave at defaults
Fuel Flow Parameters	Enabled
Engine Type	Single Engine
Engine 1 K Factor	See transducer*
Engine 2 K Factor	See transducer*
Fuel Density (lbs/Gal)	6.71
Serial Output Format	SHADIN_Z

* The K Factor is 1000 times the number printed on the transducer. For example, a transducer with a K Factor of 9.63 is configured as 9630.

28-23 Fuel Flow Meter Installation (continued)

F. Scheduled Maintenance

Every 12 Months:

Transducer

Visually inspect fuel control unit-to-transducer fuel tube connections, transducer, and reducer connections to transducer and check valve for evidence of leakage. Visually inspect components for any obvious damage; verify proper installation and security. Verify no damaged connectors. Verify wiring neatness, proper routing and installation, and security.

Adapter

Visually inspect adapter for any obvious damage; verify proper installation and security. Inspect wiring for loose, chafed, frayed, or broken wires. Verify no damaged connectors. Verify wiring neatness, proper routing and installation, and security.

G. Special Maintenance

Transducer and Adapter

Refer to configuration procedure per Part E. Determine K-factor printed on the transducer; verify adapter is configured properly. Perform 100-Hour/Annual inspection per Part F.

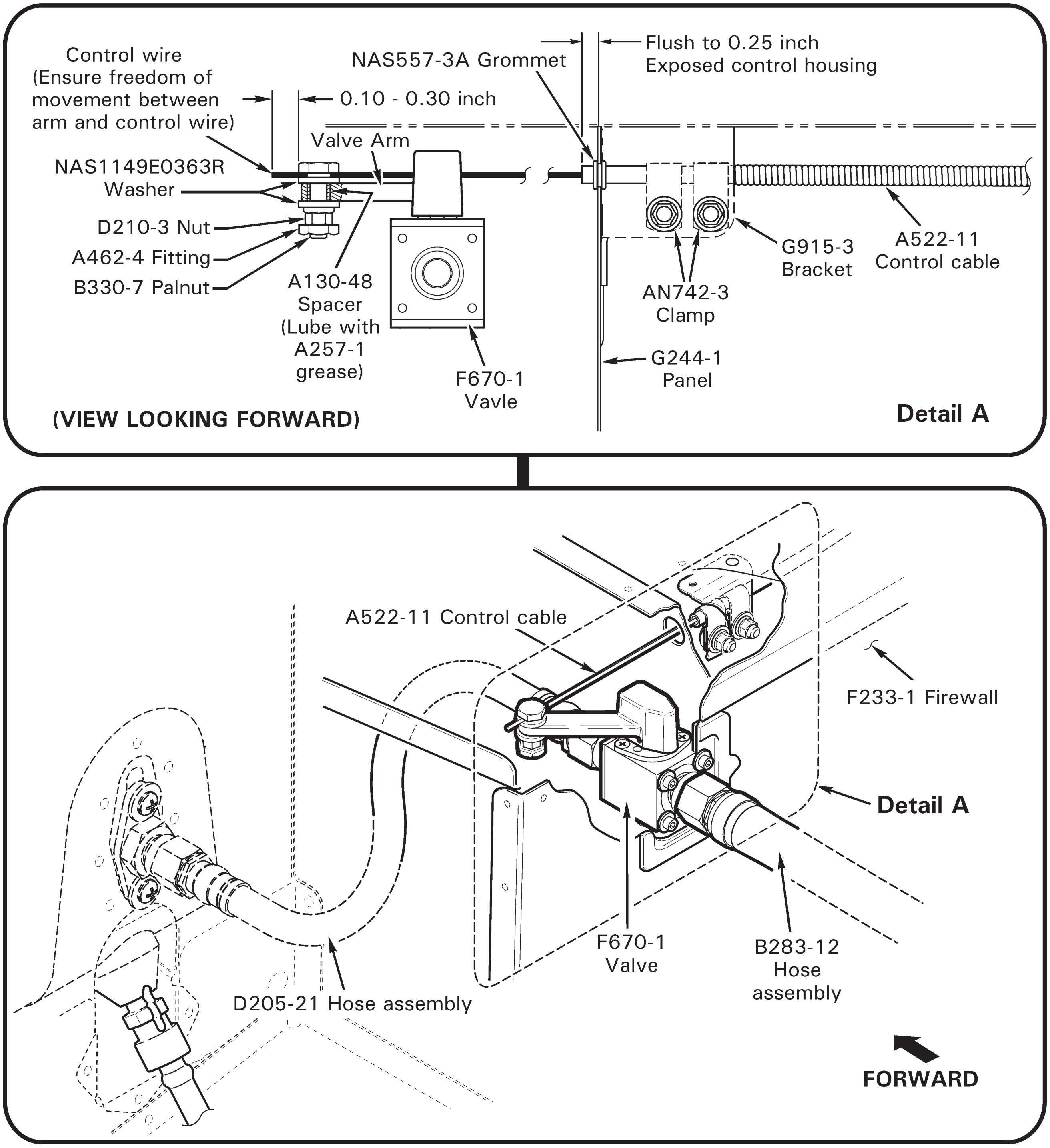

FIGURE 28-4 FUEL VALVE

28-30 Fuel Valve

A. Removal

1. Defuel helicopter per § 12-42.
2. Refer to Figures 28-1 and 28-4. Open sump drain access door. Remove palnut and loosen nut securing A462-4 fitting and A522-11 (fuel valve) control inner wire to F670-1 fuel valve arm.
3. Disconnect D205-21 and B283-12 hose assemblies from fuel valve and cap fittings.
4. Remove screws and washers securing fuel valve to F233-1 firewall and remove fuel valve through sump drain access door.

B. Installation

1. Refer to Figures 28-1 and 28-4. Install screws and washers securing F670-1 fuel valve to F233-1 firewall. Verify security.
2. Remove caps and connect D205-21 and B283-12 hose assemblies to fuel valve. Special torque hose nuts per § 20-33 and torque stripe per Figure 5-1.
3. Perform fuel valve control rigging per § 28-31.
4. Perform fuel flow check per § 28-40.

28-31 Fuel Valve Control Rigging

1. Refer to Figures 28-1 and 28-4. Open sump drain access door. Remove palnut and loosen nut securing A462-4 fitting and A522-11 (fuel valve) control inner wire to F670-1 fuel valve arm.
2. Open baggage compartment door. As required, loosen hardware securing AN742-3 clamps and control housing to G915-3 bracket. Position end of control housing flush to 0.25 inch at or beyond edge of G244-1 panel and install fasteners. Verify security.
3. Refer to detail in Figure 76-3. Push fuel valve into on position then pull up slightly to create 0.03-0.10 clearance under control knob. Position fuel valve arm in full open detent. Verify sufficient inner wire beyond outboard edge of fitting and special torque fitting nut per § 20-33.
4. Pull fuel valve into off position and verify valve arm fully contacts OFF detent. Push fuel valve into on position and verify valve arm fully contacts ON detent, meeting clearance requirement. Reposition fitting per previous steps, as required.
5. Install fitting palnut, standard torque per § 20-32, and torque stripe per Figure 5-1. Trim control wire 0.10-0.30 inch beyond aft edge of fitting.
6. Close sump drain access door. Close and latch baggage compartment door.

28-40 Fuel Flow Check

1. Open mast fairing per § 53-22. Remove engine cowling per § 53-21.
2. Refer to Figure 28-1. Attach a temporary hose to one of the vent weldment openings. With the fuel cap installed, blow into the hose (do not use compressed air) and verify air blows out the other vent opening. If air does not blow out the other vent, remove obstruction(s) in vent line(s) or in fuel bladder and repeat check.
3. Defuel helicopter per § 12-42, then service helicopter with 19.4 gallons of fuel per § 12-41.
4. Weigh a suitable, empty container having a volume of at least one gallon. Record weight of empty container in table below.
5. Pull fuel valve into off position and disconnect B283-12 hose assembly from the engine fuel inlet fitting.
6. Using a second, suitable container, push fuel valve into on position and drain fuel into second container for a few seconds to purge system of air. Then fill the weighed container for 60 seconds. Weigh and record weight of empty container & 60 seconds of fuel flow in table below.
7. Perform the following calculation:

Combined weight of empty container & 60 seconds fuel flow:		____________	lb
Subtract Weight of empty container:	–	____________	lb
Equals Weight of 60 seconds fuel:	=	____________	lb

8. Minimum fuel flow (at 19.4 gallons of fuel) is 4.75 lb/min (60 seconds). If fuel flow is less than 4.75 lb/min, remove obstruction(s) in vent line(s), fuel bladder, fuel hoses, fuel valve, or fuel strainer (inside bladder at outlet), and repeat check until fuel flow is satisfactory.
9. Close mast fairing per § 53-22. Install engine cowling per § 53-21.

Intentionally Blank

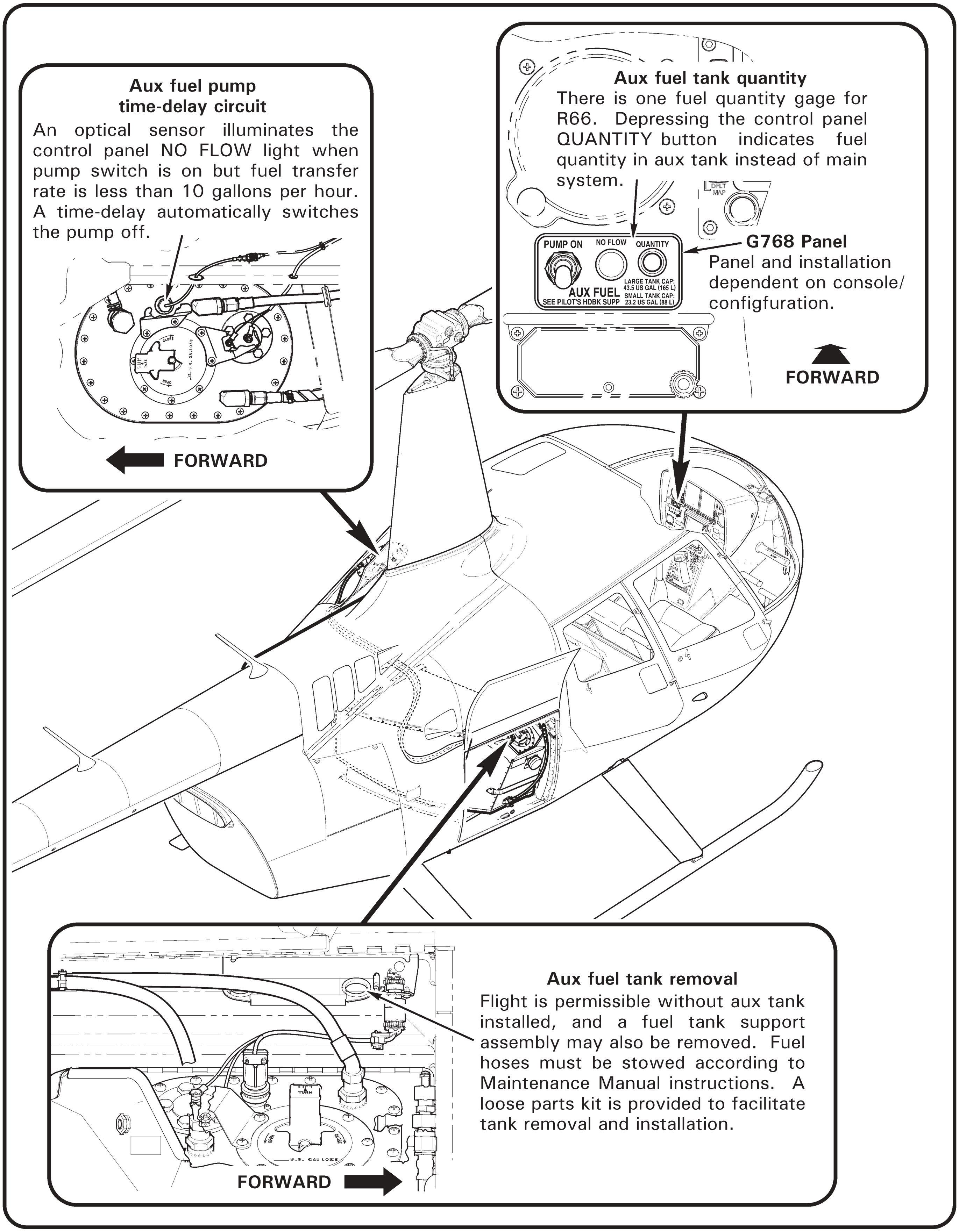

FIGURE 28-5 AUX FUEL SYSTEM (LARGE TANK SHOWN)

28-50 Aux Fuel System

A. Description

The auxiliary fuel system consists of a removable fuel tank located in the forward section of the baggage compartment, hoses connecting the auxiliary tank to the main fuel tank, and a small control panel on the instrument console.

The auxiliary fuel tank includes a crash-resistant bladder in an aluminum and fiberglass enclosure, an internal fuel transfer pump, a quantity sender, a filler port, and a sump drain. The filler port and sump drain are accessed by opening the baggage door. The tank mounts on a separate fiberglass tray which is also removable.

The pump transfers fuel to the main tank at approximately 40 gallons per hour (150 liters per hour). Venting is provided through a second hose connected to the main tank. If the main tank is full, any excess fuel transferred by the pump returns to the auxiliary tank through the vent hose.

A fuel flow sensor is located at the fitting where transferred auxiliary fuel enters the main tank (hose connection near the main tank filler port). The sensor illuminates the NO FLOW light on the control panel when the pump switch is on but the fuel transfer rate is less than ten gallons per hour.

The AUX FUEL control panel on the console includes a pump switch, a NO FLOW annunciator light, and a QUANTITY button. The pump switch engages the transfer pump. When the pump switch is on, the NO FLOW light indicates fuel is not transferring from auxiliary tank to the main tank, either because the auxiliary tank is empty or the pump has failed. It is normal for the light to illuminate for approximately five seconds when the pump is first switched on while the system is priming.

A time-delay circuit automatically switches the pump off if the NO FLOW light is illuminated for more than 15 seconds. The light will remain on even after the time delay has removed power from the pump. Turning the pump switch off will extinguish the light.

While the QUANTITY button is depressed, the fuel quantity gage indicates fuel quantity in the auxiliary tank instead of the main tank. The NO FLOW light also comes on while the QUANTITY button is depressed to provide a test of the circuit and to confirm that the auxiliary tank quantity is being displayed on the fuel gage.

The auxiliary fuel tank has two drains through the belly of the helicopter. Any fuel spilled at the filler port is collected by the surrounding scupper and drains through a hose into the outboard belly drain location. The tank support tray has a drain at the inboard drain location. Fuel leaking from the inboard drain indicates a possible leak in the fuel bladder.

A sump drain hose stowed vertically along the right side of the tank allows preflight fuel sampling from the low point of the tank. To sample fuel, extend hose away from the helicopter and push in on the valve. The valve may be locked open to allow draining of the tank.

28-50 Aux Fuel System (continued)

A. Description (continued)

Operationally, the fuel transfer pump may be switched on any time at the pilot's discretion. If the main tank is full, any excess fuel transferred from the auxiliary tank will return through the vent/return hose. Note that fuel in the auxiliary tank is not considered usable for flight planning purposes because the fuel transfer system has no redundancy in case of pump failure.

The auxiliary fuel tank may be removed to provide additional baggage space. The separate support tray may also be removed. A small container which may be clipped to the outboard side of the tank is provided for stowing installation hardware.

28-51 Aux Fuel System – Tank Assembly

A. Removal

1. Defuel aux fuel tank per § 12-42.
2. Turn battery switch off and pull out (5 amp) AUX FUEL PUMP circuit breaker at panel. Open main baggage compartment door.
3. Disconnect G768-4 harness assembly from airframe harness at connectors.
4. Using a back-up wrench, disconnect D205-36 (vent/return) and D205-36 (pump) hose assemblies from aux tank fittings in G759-1 cover assembly. Install AN820-6 or AN929-6 caps (included in MT183-1 kit) on aux tank fittings. Install AN806-6D plugs (included in MT183-1 kit) on hose fittings, special torque plugs to 120 in.-lb, and stow hoses in G769-1 bracket assembly.
5. Remove B526-6 screws securing G010 aux tank assembly to G259-1 bulkhead and G251-1 panel. Remove tank assembly using straps.

> NOTE
>
> Flight is permissible without G010 aux tank assembly installed when (2) AN806-6D plugs installed on D205-36 hose assemblies and hoses are stowed in G769-1 bracket assembly (see above instructions).

6. As required, revise Weight and Balance Record in R66 Pilot's Operating Handbook (POH) Section 6 to reflect aux tank assembly removal using the following data:

Subtract:

Item	Weight	Long. Arm	Long. Moment	Lat. Arm	Lat. Moment
Large Aux Tank Assy	–30.0 lb	101.0 in.	–3030.0 in.-lb	1.5 in.	–45.0 in.-lb
Small Aux Tank Assy	–23.0 lb	96.8 in.	–2226.4 in.-lb	3.5 in.	–80.5 in.-lb

28-51 Aux Fuel System – Tank Assembly (continued)

B. Installation

1. Turn battery switch off and pull out (5 amp) AUX FUEL PUMP circuit breaker at panel. Open main baggage compartment door.

2. Position G010 aux tank assembly on G755 support assembly (tank pin will align with relief in support); route drain tube into floor weldment. Install B526-6 screws securing aux tank to G259-1 bulkhead and G251-1 panel. Verify security.

3. Remove AN820-6 or AN929-6 caps from aux tank fittings in G759-1 cover assembly, and AN806-6D plugs from D205-36 (vent/return) and D205-36 (pump) hose assemblies. Stow caps and plugs in MT183-1 kit's jar assembly.

4. Connect hose assemblies to aux tank fittings. Using a back-up wrench on fittings, special torque hose nuts per § 20-33, & torque stripe per Figure 5-1. Verify security.

5. Connect G768-4 harness assembly to airframe harness at connectors. Verify security.

6. As required, revise Weight and Balance Record in R66 Pilot's Operating Handbook (POH) Section 6 to reflect aux tank assembly installation using the following data:

   Add:

Item	Weight	Long. Arm	Long. Moment	Lat. Arm	Lat. Moment
Large Aux Tank Assy	30.0 lb	101.0 in.	3030.0 in.-lb	1.5 in.	45.0 in.-lb
Small Aux Tank Assy	23.0 lb	96.8 in.	2226.4 in.-lb	3.5 in.	80.5 in.-lb

7. Fuel as required per § 12-41.

8. Turn battery switch on and push in (5 amp) AUX FUEL PUMP circuit breaker at panel. Turn pump switch on and inspect vent/return, pump, and sump drain hose assemblies where they connect to tank. Verify no fuel leaks.

9. Turn pump and battery switches off. Close and secure main baggage compartment door.

28-52 Aux Fuel System – Support Assembly

A. Removal

1. Remove aux fuel tank per § 28-51.
2. Remove B526-6 screws securing G755 support assembly to bulkhead and remove B536-8 screws securing support assembly to floor. Carefully remove support.

> NOTE
>
> Flight is permissible without G010 aux tank assembly installed when (2) AN806-6D plugs installed on D205-36 hose assemblies and hoses are stowed in G769-1 bracket assembly (refer to § 28-51). G755 support assembly installation is optional when tank is removed.

3. As required, revise Weight and Balance Record in R66 Pilot's Operating Handbook (POH) Section 6 to reflect support assembly removal using the following data:

Subtract:

Item	Weight	Long. Arm	Long. Moment	Lat. Arm	Lat. Moment
Large Tank Support Assy	−3.0 lb	101.0 in.	−303.0 in.-lb	−1.2 in.	3.6 in.-lb
Small Tank Support Assy	−2.0 lb	96.8 in.	−193.6 in.-lb	−0.4 in.	0.8 in.-lb

B. Installation

1. Verify baggage compartment floor where G755 support assembly is to be installed is free of debris. Position support assembly on floor.
2. Install B526-6 screws securing support assembly to bulkhead and install B536-8 screws securing support assembly to floor. Verify security.
3. As required, revise Weight and Balance Record in R66 Pilot's Operating Handbook (POH) Section 6 to reflect support assembly installation using the following data:

Add:

Item	Weight	Long. Arm	Long. Moment	Lat. Arm	Lat. Moment
Large Tank Support Assy	3.0 lb	101.0 in.	303.0 in.-lb	−1.2 in.	−3.6 in.-lb
Small Tank Support Assy	2.0 lb	96.8 in.	193.6 in.-lb	−0.4 in.	−0.8 in.-lb

4. Install aux fuel tank per § 28-51 or refer to NOTE in Part A.

28-53 Aux Fuel System – Bladder

CAUTION

Avoid contaminating bladder interior. Cover arms with sleeves and use lint-free gloves when working inside bladder.

A. Removal

1. Remove aux fuel tank per § 28-51.
2. Cut ty-rap securing D205 (drain) hose assembly to G762-11 scupper. Using a back-up wrench, disconnect hose from drain fitting, release hose at tab, and remove hose. Cap and plug fittings. Remove screws securing G756 bladder and scupper to G754 enclosure assembly.
3. Remove fuel quantity sender per § 28-21.
4. Remove screws securing G759-1 cover assembly and bladder to enclosure. Lift cover and inside bladder, release clamp securing drain tube to fitting. Inside bladder, remove screws securing G764-1 drain weldment and G765-1 pump assembly to bladder. Remove weldment, pump, and tubes with connected cover assembly.
5. Remove screws securing G758-1 cover to enclosure assembly. Remove G762-12 hinge. Guide cover clear of strap and remove cover.
6. Detach bladder hook tape from enclosure loop tape and remove bladder. Tape bladder openings.

B. Installation

1. Fold forward, aft, and left sides of G756 bladder inward; align bladder's G759-4 ring assembly with G754 enclosure assembly's servicing panel to clear strap, and press bottom of bladder to enclosure's tray. Unfold bladder, and align bladder and enclosure hook and loop tape.

CAUTION

Verify bladder is free of wrinkles across lower surface and properly located before attaching hook and loop tape. Bladder may be pressurized with air to 1 psi max to assist installation.

2. Remove tape protecting bladder openings. Insert a clean, smooth, blunt wooden dowel through bladder service opening and press on bladder lower surface to attach hook and loop tape. Verify security.
3. Guide G758-1 cover clear of strap and install screws securing cover to enclosure. Install G762-12 hinge. Verify security.

28-53 Aux Fuel System – Bladder (continued)

B. Installation (continued)

4. Position G765-1 pump assembly, G764-1 drain weldment, and tubes (with connected G759-1 cover assembly) inside bladder and install screws. Verify security.
5. Inside bladder, install clamp securing drain tube to fitting. Verify security.
6. Install screws securing bladder and G762-11 scupper to enclosure at drain. Verify security.
7. Connect D205 (drain) hose assembly to drain fitting, aligning hose 8.5° ± 5.0° from parallel with edge of enclosure's G757-1 tray. Using a back-up wrench, special torque hose nut per § 20-33, and torque stripe per Figure 5-1. Secure hose near drain valve at tab. Install MS336-7-9 ty-rap securing scupper to hose. Cinch ty-rap until snug without overtightening, and trim tip flush with head.
8. Apply light coat A257-9 anti-seize to screw threads and install screws securing G759-1 cover and bladder to enclosure. Verify security.
9. Install fuel quantity sender per § 28-21.
10. Install aux fuel tank per § 28-51.

Intentionally Blank

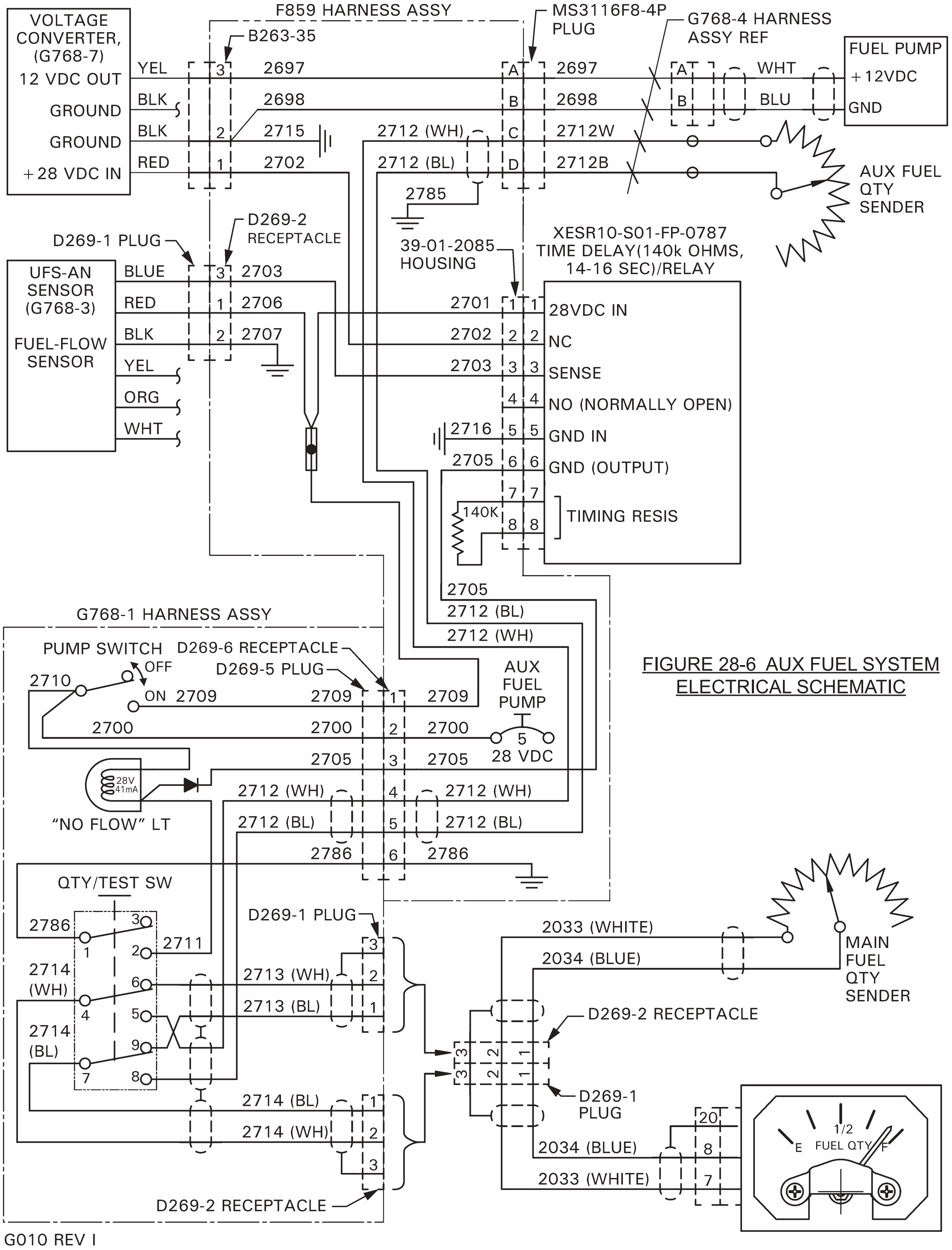

FIGURE 28-6 AUX FUEL SYSTEM ELECTRICAL SCHEMATIC

28-54 Aux Fuel System – Fuel Quantity Sender

Refer to § 28-21 for fuel quantity sender maintenance instructions.

28-55 Aux Fuel System – Pump Assembly

CAUTION

Avoid contaminating bladder interior. Cover arms with sleeves and use lint-free gloves when working inside bladder.

A. Removal

1. Defuel aux fuel tank per § 12-42.
2. Turn battery switch off and pull out (5 amp) AUX FUEL PUMP circuit breaker at panel. Open main baggage compartment door.
3. Disconnect G768-4 harness assembly from airframe harness at connectors.
4. Using a back-up wrench, disconnect D205-36 (vent/return) and D205-36 (pump) hose assemblies from aux tank fittings in G759-1 cover assembly. Temporarily cap and plug fittings (AN820-6 and AN929-6 caps, and AN806-6D plugs are included in MT183-1 kit).
5. Refer to Figure 28-7. Remove screws securing G759-1 cover assembly and G756 bladder to G754 enclosure assembly. Lift cover and inside bladder, release clamp securing A729-73 tube to drain fitting. Inside bladder, remove screws securing G764-1 drain weldment and G765-1 pump assembly to bladder. Remove weldment, pump, and tubes with connected cover assembly. Tape opening to prevent contamination of bladder interior.
6. Unwind B161-108 spirap from A729-24 tube and pump wiring. Remove D277-8 clamp and tube from pump. Remove hardware securing pump connector to cover.

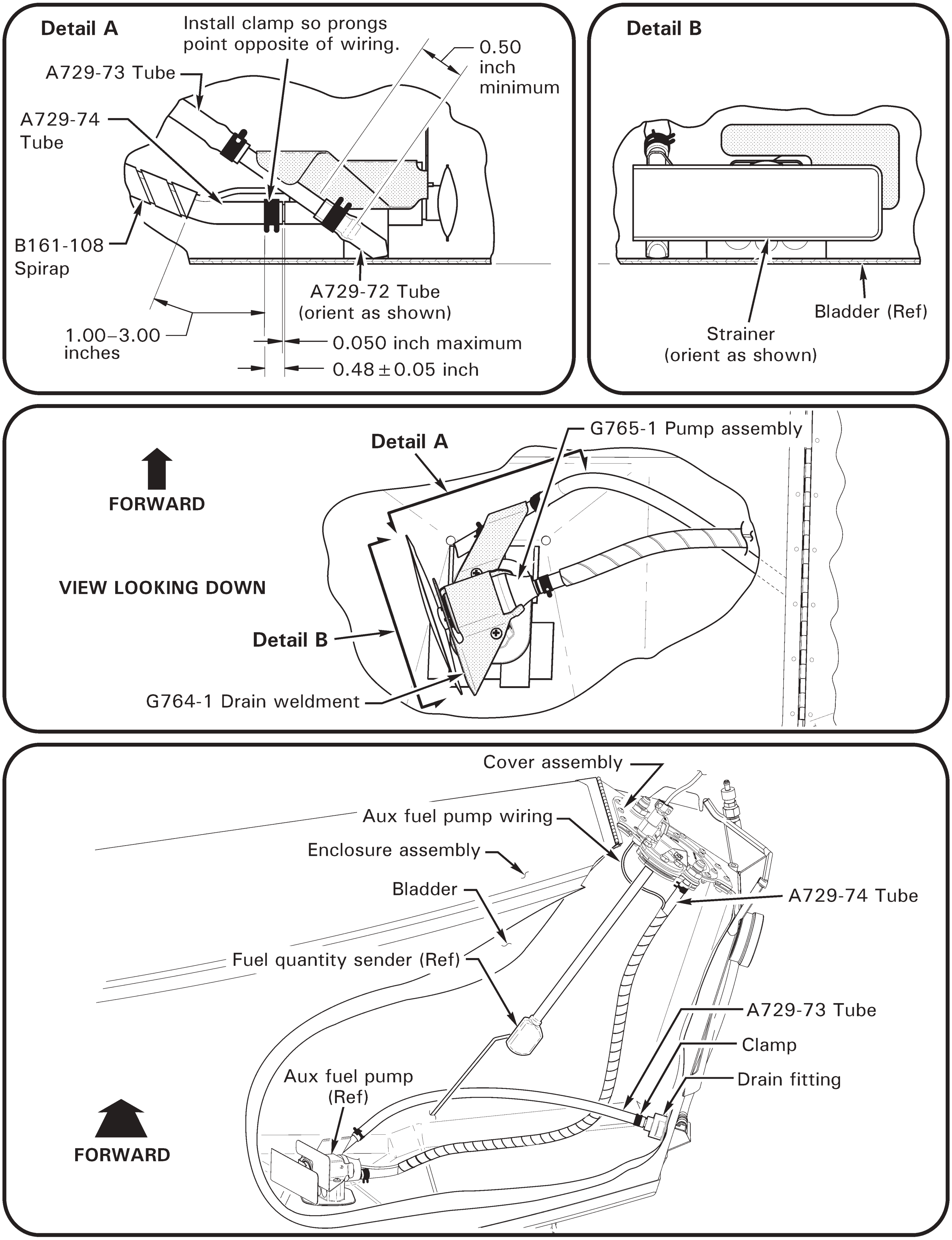

FIGURE 28-7 FUEL PUMP

28-55 Aux Fuel System – Pump Assembly (continued)

B. Installation

1. Turn battery switch off and pull out (5 amp) AUX FUEL PUMP circuit breaker on circuit breaker panel. Open main baggage compartment door.
2. Remove tape from opening of G756 bladder. Verify bladder is free of wrinkles across lower surface of tank and is properly located.
3. Refer to Figure 28-7. Position G764-1 drain weldment with attached tubes (without pump) in bladder and temporarily secure with screws. Verify with flashlight and mirror bottom end of A729-72 tube contacts bladder as shown. Adjust tube and repeat step as required. Remove weldment with attached tubes.
4. Position A729-74 tube on G765-1 pump assembly as shown; install D277-8 clamp so prongs point opposite of wiring. Verify security. Run pump wiring along tube and secure with B161-108 spirap as shown; ensure there is 1.00–3.00 inches between spirap and clamp.
5. Place drain weldment with attached tubes on pump assembly and position weldment and pump inside bladder; verify strainer is positioned as shown and install mounting screws. Verify security.
6. Connect A729-73 tube to drain fitting and install D277-8 clamp; verify security. Connect A729-74 tube to G759-1 cover assembly, install D277-8 clamp, and ensure there is 1.00–3.00 inches between spirap and clamp; verify security. Install hardware securing pump connector to cover; verify security.
7. Install screws securing cover and bladder to G754 enclosure assembly; verify security.
8. Remove AN820-6 or AN929-6 caps from aux tank fittings in G759-1 cover assembly, and AN806-6D plugs from D205-36 (vent/return) and D205-36 (pump) hose assemblies. Stow caps and plugs in MT183-1 kit's jar assembly.
9. Connect hose assemblies to aux tank fittings. Using a back-up wrench on fittings, special torque hose nuts per § 20-33, and torque stripe per Figure 5-1. Verify security.
10. Connect G768-4 harness assembly to G768-1 harness assembly at connectors. Verify security.
11. Perform fuel quantity indication check per § 28-21.
12. Using ground power or during flight check, switch on aux pump and verify no flow light extinguishes in less than 15 seconds. Continue timing from when pump was switched on and verify light re-illuminates (aux fuel is transferred to main tank) in less than 16 minutes. Verify aux fuel quantity indication is empty after light re-illuminates.

Intentionally Blank

28-60 Pressure Fueling System

A. Description

The pressure fueling system consists of a fueling port on the right side of the fuselage, two shut-off valves in series just downstream of the port, a hose from the valves to an inlet at the top of the fuel tank, fuel tank level and pressure sensors, and a control panel on the instrument panel. The fueling port is compatible with an Emco Wheaton J71 dry-break coupler (recommended Emco Wheaton part no. J71C-AVN1-E004, which fits a fuel hose with a one inch male NPT threaded fitting).

Two shut-off valves are used to provide redundant protection against overfueling. Both valves must be open to allow fuel to flow. Each valve is connected to an independent float switch in the fuel tank to close the valve when the tank is full as well as an independent pressure switch to close the valve if fuel tank overpressure is detected. One of the valves is also connected to a second float switch to shut off at 40 gallons (151 liters).

The pressure fueling control panel includes a power switch, a quantity selector switch, a VALVE OPEN light, and a TANK PRESSURE warning light with two test buttons for testing the overpressure warning circuits. The power switch enables refueling by providing power to open the two shut-off valves. If the helicopter is running, the collective must be on the down stop for the valves to operate. The VALVE OPEN light illuminates when both shut-off valves are open, indicating the system is ready to accept fuel. The TANK PRESSURE light illuminates when excessive pressure is detected in the fuel tank. Excessive pressure will latch a shut-off valve closed until power to the system is cycled.

The pressure fueling system feeds fuel to the top of the main fuel tank. The system cannot be used for defueling and it will not add fuel to the optional auxiliary tank in the baggage compartment. Maximum allowable pressure for ground equipment connected to the fueling port is 50 psi (3.5 bar), which provides approximately 50 gallons per minute (190 liters per minute) fuel flow. Approximate flow rates at lower pressures are 30 gpm at 20 psi, 20 gpm at 10 psi, and 100 lpm at 1 bar.

The fueling port and recommended Emco Wheaton coupler are both dry-break fittings, allowing the external fueling equipment to be connected or disconnected without fuel spillage regardless of whether the shut-off valves are open or closed. A cap is provided which may be installed on the fueling port when the system is not in use.

An optical sensor near the fueling port will detect a fuel hose if the hose is connected to the port. If the collective is raised off the down stop while a hose is connected, a “fuel hose” audio alert will repeat in the headsets. The alert is muted 15 seconds after the collective is raised to prevent a distraction in case of a false alert.

CAUTION

The audio alert is only an aid. Do not rely on audio alert to verify hose is disconnected. Pilots must visually confirm fuel hose is disconnected and area is clear before takeoff.

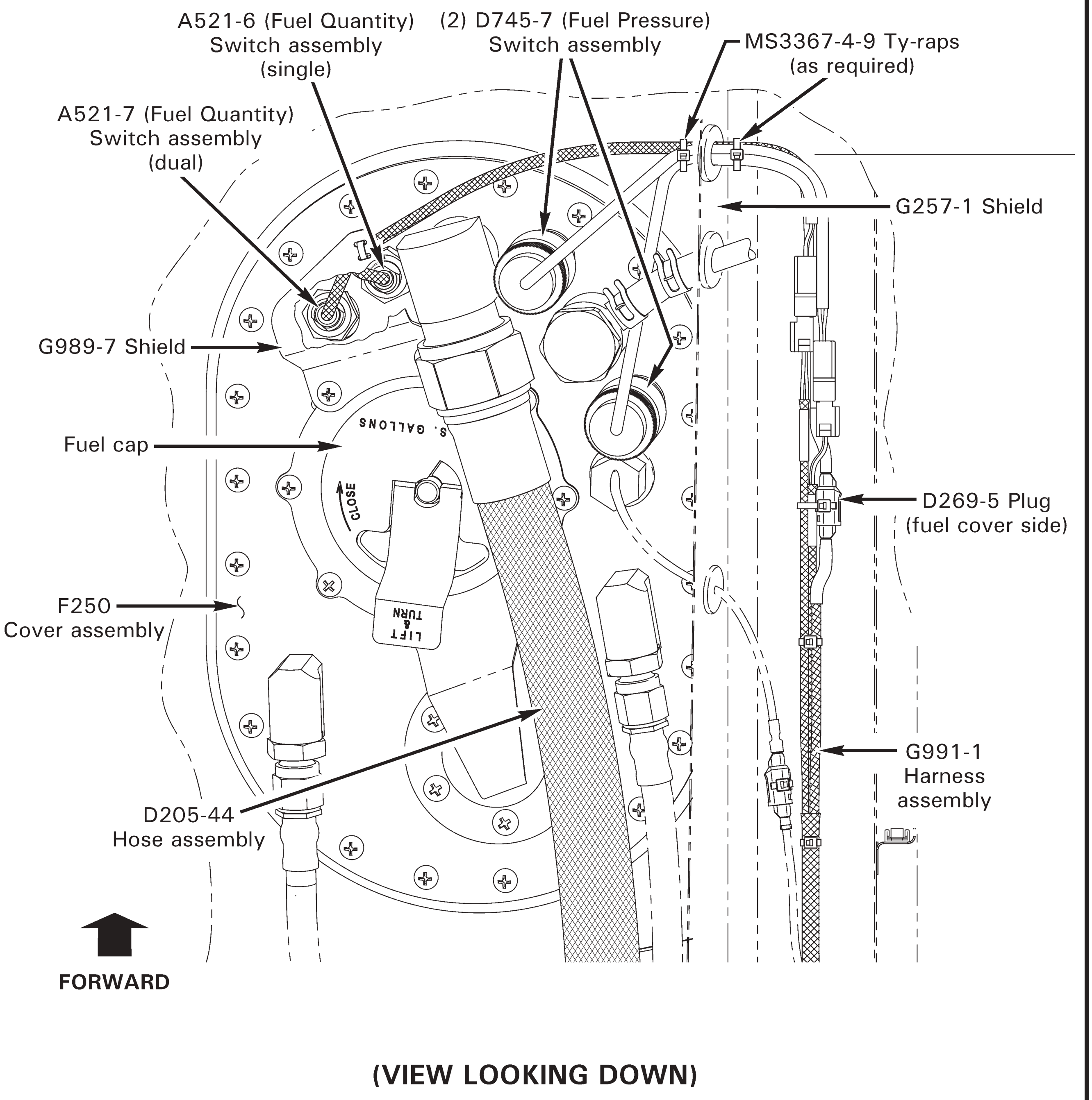

FIGURE 28-8 MAIN FUEL PORT (SHOWN WITH OPTIONAL AUX FUEL TANK)

28-61 A521 (Fuel Level) Switch Assemblies

CAUTION

Avoid contaminating bladder interior. Cover arms with sleeves and use lint-free gloves when working inside bladder.

A. Schematic

Refer to Figure 98-34 for pressure fueling system installation schematic.

B. Removal

1. Defuel helicopter per § 12-42.
2. Turn battery & avionics switches off and pull PRESS. FUELING circuit breaker (5 amp) at circuit breaker panel.
3. Remove tailcone cowling per § 53-23.
4. Refer to Figure 28-8. Open (main) fueling port door. Cut and discard ty-raps as required and disconnect A521 & D745-7 switch assembly wire harnesses from G991-1 harness assembly at connectors.
5. Using appropriate pin extractor, extract pins from switch assembly wire harness connectors; pull grommet and wires thru G257-1 shield.
6. Carefully pull A521 switch assembly wires through grommet, taking care not to damage other wire insulation or grommet.
7. Remove ty-rap as required, and remove screws securing G989-7 shield to F250 cover assembly. Remove shield.
8. Remove fuel cap. Carefully capture A521-6 (single) or A521-7 (dual) switch assembly body with gloved hand.
9. Remove nut securing switch assembly to F250 cover assembly; carefully route wires thru (switch) opening, inside bladder.
10. Carefully pull switch assembly through (fuel cap) opening, avoiding fuel sender. Install fuel cap and protect F250 cover assembly opening.

28-61 A521 (Fuel Level) Switch Assemblies (continued)

C. Installation

1. Lubricate (new) MS29512-05 packing with A257-6 grease and install packing over A521-6 (single) or A521-7 (dual) switch assembly threads.
2. Refer to Figure 28-8. Open (main) fueling port door and remove fuel cap. With gloved hand, route switch assembly and wiring through (fuel cap) opening inside of bladder. Route wires thru switch assembly opening and install nut securing switch assembly to F250 cover assembly. Special torque nut per § 20-33 and torque stripe per Figure 5-1.
3. Install B266-8 sleeving over switch assembly wires, as required.
4. Carefully pull A521 switch assembly wires through grommet, taking care not to damage other wire insulation or grommet.
5. Pull A521 & D745-7 switch assembly wires and grommet thru G257-1 shield and install grommet.
6. As required, install pins on wires per the following: strip 0.18-inch insulation from wires. Crimp M39029/58-360 pin onto each wire. Using 10X magnification, inspect crimps per § 20-94. Verify no nicked or broken conductors (wire strands), and no insulation damage. As required, gently pry locking lance with fingernail so lance protrudes (lance will not lock in housing unless it protrudes).
7. Install wires in housings per schematic (see Part A). Connect switch assembly wire harnesses to airframe harness at connectors; verify security.
8. Secure switch assembly wiring to G989-7 shield using MS3367-4-0 ty-rap (locate head under shield); lock D269 plug and receptacle and secure to wiring using MS3367-4-9 ty-rap; install MS3397-4-X ty-raps as required to secure wiring. Cinch ty-raps until snug without overtightening and trim tips flush with heads.
9. Apply A257-9 anti-seize to screw threads and install screws securing G989-7 shield to F250 cover assembly.
10. Close (main) fueling port door. Install tailcone cowling per § 53-23.

D. Operation Check

1. Defuel helicopter per § 12-42, as required.
2. Push in PRESS. FUELING circuit breaker (5 amp) at circuit breaker panel. Turn battery switch on.
3. Remove main tank fuel cap. Carefully capture A521-6 (single) or A521-7 (dual) switch assembly float with gloved hand. Have a second person turn on power and set quantity to 40 GAL at pressure fueling control panel; verify VALVE OPEN light is illuminated. Verify light extinguishes when actuating each float individually.
4. Turn off power at pressure fueling control panel. Turn battery switch off.

28-62 D745-7 (Pressure) Switch Assemblies

A. Schematic

Refer to Figure 98-34 for pressure fueling system installation schematic.

B. Removal

1. Turn battery & avionics switches off and pull PRESS. FUELING circuit breaker (5 amp) at circuit breaker panel.
2. Remove tailcone cowling per § 53-23.
3. Refer to Figure 28-8. Open (main) fueling port door. Cut and discard ty-raps as required and disconnect D745-7 & A521 switch assembly wire harnesses from airframe harness at connectors.
4. Using appropriate pin extractor, extract pins from D745-7 switch assembly wire harness connectors; pull grommet and wires thru G257-1 shield.
5. Carefully pull D745-7 switch assembly wires through grommet, taking care not to damage other wire insulation or grommet.
6. Remove switch assembly from F250 cover assembly. Protect F250 cover assembly opening.

C. Installation

1. Refer to Figure 28-8. Apply B270-6 sealant or A701-11 tape to D745-7 switch assembly threads and install switch in F250 cover assembly. Special torque switch per § 20-33 and torque stripe per Figure 5-1.
2. Carefully pull D745-7 switch assembly wires thru grommet, taking care not to damage other wire insulation or grommet.
3. Pull D745-7 & A521 switch assembly wires and grommet thru G257-1 shield and install grommet.
4. Install wires in housings per schematic (see Part A). Connect switch assembly wire harnesses to airframe harness at connectors; verify security.
5. Refer to figure and install MS3367-4-9 ty-raps as required to lock D269 plug and receptacle and to secure wiring. Cinch ty-raps until snug without overtightening and trim tips flush with heads.
6. Close (main) fueling port door. Install tailcone cowling per § 53-23.

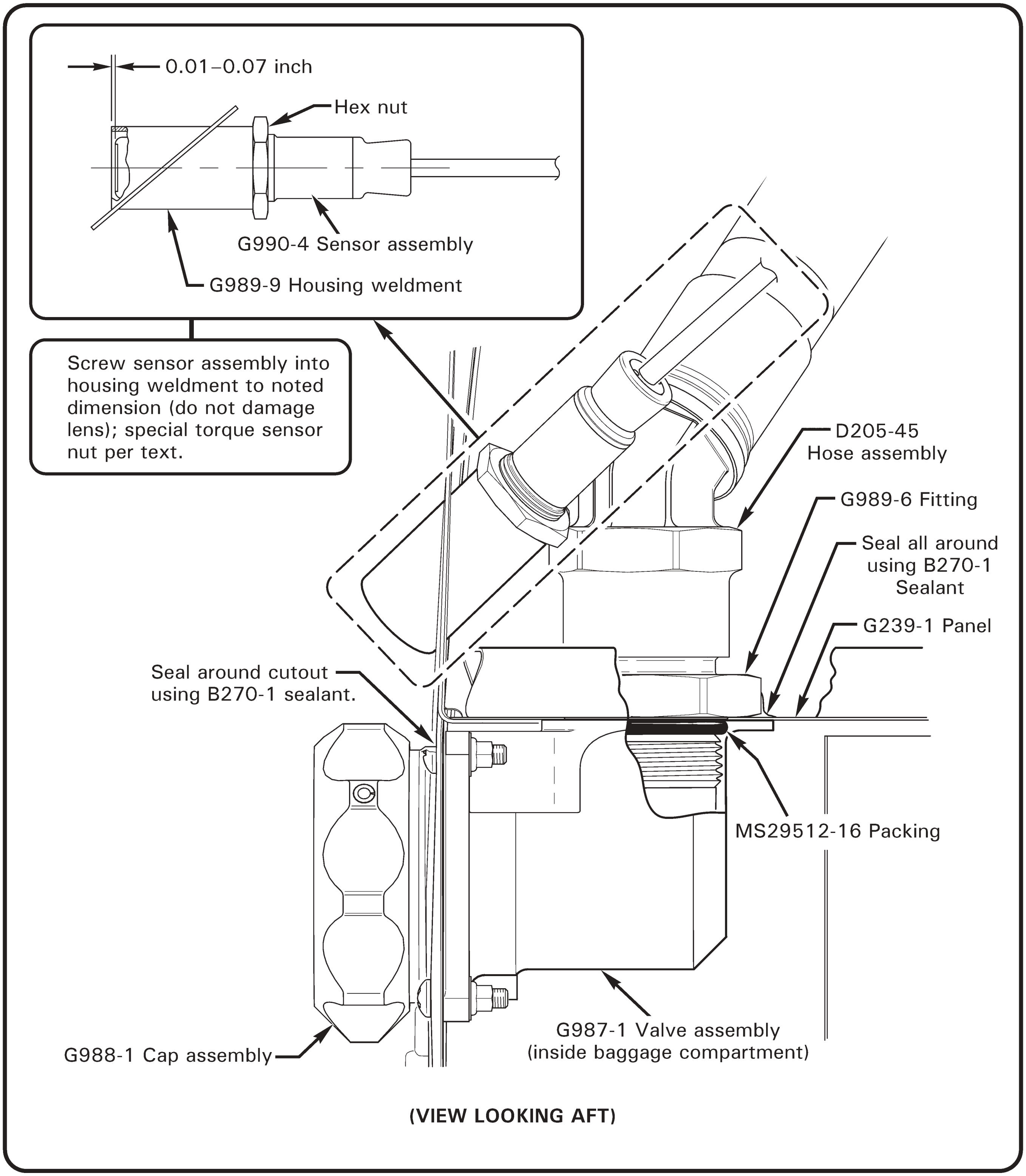

FIGURE 28-9 PRESSURE FUEL PORT

28-63 G987-1 (Fuel Port) Valve Assembly

A. Removal

1. Remove residual fuel from system per § 28-66, as required.
2. Remove tailcone cowling per § 53-23.
3. Refer to Figure 28-10. Open right-side engine cowling door. Remove hardware securing G989-8 brackets to firewall. Cut and discard ty-raps as required.
4. Refer to Figure 28-9. Using backup wrench, disconnect D205-45 hose assembly from G989-6 fitting. Cap hose.
5. Remove G989-6 fitting from G987-1 valve assembly.
6. Remove G988-1 cap assembly. Open baggage compartment door. Remove hardware securing valve to aft cabin skin and firewall; remove valve. Install fuel cap and protect valve opening.
7. Remove residual B270-1 sealant from G239-1 panel and parts.

B. Installation

1. Refer to Figure 28-9. Open baggage compartment door and right-side engine cowling door. Remove G988-1 cap assembly and position G987-1 valve assembly between G239-1 panel and aft cabin skin. Install hardware securing valve to skin and firewall; verify security.
2. Lubricate new MS29512-16 packing with A257-6 grease and install on G989-6 fitting, as required, and install fitting thru panel in valve. Special torque fitting per § 20-33 but do not torque stripe.
3. Connect D205-45 hose assembly nut to fitting but do not tighten. Rotate assembled valves to minimize preload on G989-8 brackets and install hardware securing brackets to firewall. Verify security.
4. Using backup wrench, special torque hose nut per § 20-33 but do not torque stripe. Install ty-raps per Figure 28-10. Cinch ty-raps snug without over tightening and trim tips flush with heads
5. Seal all around cutout and fitting using B270-1 sealant; torque stripe fitting and hose nut per Figure 5-1.
6. Install tailcone cowling per § 53-23.

28-64 G990-4 (Proximity) Sensor Assembly

A. Schematic

Refer to Figure 98-34 for pressure fueling system installation schematic.

B. Removal

1. Turn battery & avionics switches off and pull PRESS. FUELING circuit breaker (5 amp) at circuit breaker panel.
2. Refer to Figure 28-9. Cut and discard ty-raps as required and disconnect G990-4 sensor assembly wire harness from airframe harness at connectors.
3. Loosen sensor assembly hex nut at G989-9 housing weldment and unscrew sensor from housing.

C. Installation

1. Turn battery & avionics switches off and pull PRESS. FUELING circuit breaker (5 amp) at circuit breaker panel.
2. Refer to Figure 28-9. Screw G990-4 sensor assembly into G989-8 housing weldment to noted dimension (use care when measuring with calipers not to damage lens). Special torque sensor hex nut to 60 in.-lb.
3. Connect sensor assembly wire harness to airframe harness at connectors; verify security. Install MS3367-4-9 ty-rap to lock connector; install MS3367-5-9 ty-raps as required to secure wiring. Cinch ty-raps until snug without overtightening and trim tips flush with heads.

D. Operation Check

1. Connect external fueling equipment (dry-break coupler) to pressure fueling port. Push in PRESS. FUELING circuit breaker (5 amp) at circuit breaker panel.
2. With appropriately rated person at controls, run-up helicopter to stabilized idle per R66 Pilot's Operating Handbook (POH) Section 4.
3. Turn on power at pressure fueling control panel. Lift collective stick slightly (valve open light will extinguish) and verify "fuel hose" audio alert sounds in headset for approximately 15 seconds and then ceases. Lower collective.
4. Turn off power at pressure fueling control panel. Shut down helicopter per R66 POH Section 4.
5. Disconnect external fueling equipment (dry-break coupler).

Intentionally Blank

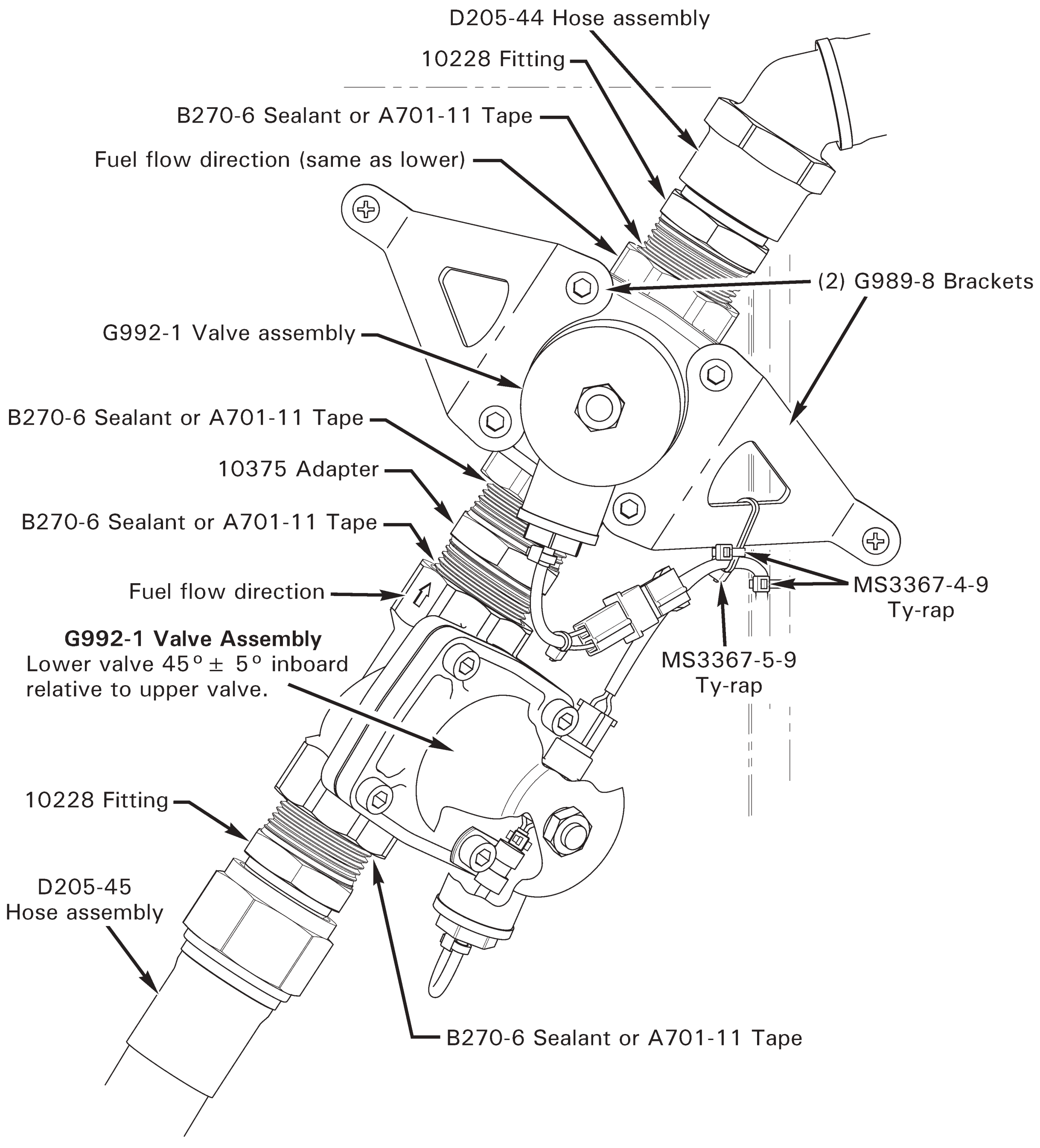

FIGURE 28-10 PRESSURE FUEL SYSTEM SHUT-OFF VALVE ASSEMBLIES

28-65 G992-1 Shut-off Valve Assemblies

A. Schematic

Refer to Figure 98-34 for pressure fueling system installation schematic.

B. Removal

1. Remove residual fuel from system per § 28-66, as required.
2. Remove tailcone cowling per § 53-23.
3. Turn battery & avionics switches off and pull PRESS. FUELING circuit breaker (5 amp) at circuit breaker panel.
4. Refer to Figure 28-10. Cut and discard ty-raps as required and disconnect G992-1 valve assembly wire harnesses from G991-1 harness assembly at connectors.
5. Using backup wrench, loosen D205-44 and D205-45 hose assembly nuts from 10228 fittings.
6. Remove hardware securing G989-8 brackets to firewall, and remove assembled G992-1 valve assemblies, brackets, fittings, and 10375 adapter. Cap or plug open fittings.
7. As required, remove brackets from upper valve assembly and reinstall screws in valve. As required, disassemble fittings and adapter from valve(s). Cap or plug open fittings.

28-65 G992-1 Shut-off Valve Assemblies (continued)

C. Installation

1. Turn battery & avionics switches off and pull PRESS. FUELING circuit breaker (5 amp) at circuit breaker panel.
2. Progressively remove caps and plugs; apply B270-6 sealant or A701-11 tape to 10375 adapter threads.
3. Refer to Figure 28-10. Assemble upper and lower G992-1 valve assemblies and 10375 adapter. Special torque valves and adapter to 500 in.-lb. Tighten valves to align lower valve to 45° ± 5° inboard relative to upper valve and torque stripe per Figure 5-1.
4. Apply B270-6 sealant or A701-11 tape to 10228 fittings (valve side threads only).
5. Install 10228 fittings using backup wrench, special torque fittings per § 20-33 and torque stripe per Figure 5-1.
6. If removed, install screws securing G989-8 brackets to upper valve; special torque screws per § 20-33 and torque stripe per Figure 5-1.
7. Position assembled valves in helicopter and connect D205-44 & D205-45 hose assembly nuts to fittings; do not tighten nuts.
8. Rotate assembled valves to minimize preload on brackets and install hardware securing brackets to firewall. Verify security.
9. Using backup wrench, special torque hose nuts per § 20-33 and torque stripe per Figure 5-1.
10. Connect valve assemblies to G991-1 wire harness at connectors; verify security. Install MS3367-4-9 or MS3367-5-9 ty-raps per figure to secure wiring; cinch ty-raps until snug without overtightening and trim tips flush with heads.
11. Install tailcone cowling per § 53-23.

D. Operation Check

1. Push in PRESS. FUELING circuit breaker (5 amp) at circuit breaker panel. Turn battery switch on. Turn on power at the pressure fueling panel; verify "VALVE OPEN" light is illuminated.
2. Via the right side access door, hold lower G992-1 valve assembly. Verify a valve actuates while a second person presses "PRESSURE CIRCUIT TEST" button 1; verify a valve actuates while a second person presses "PRESSURE CIRCUIT TEST" button 2.
3. Turn off power at pressure fueling control panel. Turn battery switch off.

28-66 Residual Fuel Removal

WARNING

Review appropriate Safety Data Sheet (SDS) when working in proximity to hazardous materials. Specific recommendations for use of personal protective equipment are located in the SDS.

Remove residual fuel in pressure fueling system per the following:

1. Push in PRESS. FUELING circuit breaker (5 amp) at circuit breaker panel. Turn battery switch on.
2. Turn on power and set quantity to FULL at pressure fueling control panel. With collective stick lowered, verify VALVE OPEN light is illuminated.
3. Remove G988-1 cap assembly.
4. Using a suitable, grounded drain container and protective gloves, depress retainers at G987-1 fueling port valve assembly and drain fuel.
5. Release retainers and reinstall cap as required.

28-67 Maintenance

A. Scheduled Inspections

Every 100-hour or annual inspection:

1. Visually inspect condition of associated equipment. Verify proper installation and security of equipment. Verify no fuel leaks.
2. Visually inspect wiring condition. Verify no loose, chafed, or broken wires or terminals. Verify neatness, proper routing and installation, and security.

B. Special Inspections

Hard Landing:

1. Perform hard landing inspection per § 5-65, as required.
2. Perform scheduled inspections check per Part A.
3. Examine integrity of installed equipment's surrounding structures.
4. Refer to § 53-11 for cabin repairs.

Lightning strike:

1. Perform lightning strike inspection per § 5-72, as required.
2. Perform scheduled inspection checks per Part A.
3. Visually inspect wiring, connectors, and installed equipment for obvious damage such as electrical arching or burns. If obvious damage is detected, additional components may require replacement. Contact RHC Technical Support with detailed documentation for further guidance prior to approving aircraft for return to service.

CHAPTER 29

HYDRAULICS

Section	Title	Page
29-00	Description	29.1
29-10	Hydraulic Pump	29.1
29-20	Hydraulic Reservoir	29.5
29-30	Hydraulic Servos	29.6

Intentionally Blank

CHAPTER 29

HYDRAULICS

29-00 Description

WARNING

Except as instructed in this manual, service on the hydraulic system is limited to component removal and replacement.

CAUTION

Cleanliness of hydraulic fluid is vital to proper system operation. Use only clean fluid from sealed containers and avoid contamination from dirty funnels, tubing, etc. Use LPS PreSolve to clean hydraulic parts. Do not use alcohol.

Hydraulically boosted main rotor flight controls eliminate cyclic and collective feedback forces. The hydraulic system consists of a pump, three servos, a reservoir, and interconnecting lines. Normal operating pressure is 450 to 500 psi. The pump is mounted on and driven by the main rotor gearbox. A servo is connected to each of the three push-pull tubes that support the main rotor swashplate. The reservoir is mounted to the aft end of the main rotor gearbox and includes a filter, pressure relief valve, and pilot-controlled pressure shut-off valve.

A sight glass for pre-flight fluid level checks is incorporated in the reservoir and accessible via a left side cowl door. A vented filler cap is located on top of the reservoir.

The pressure shut-off valve is solenoid-actuated and controlled by the hydraulic switch on the pilot's cyclic. The switch should be left on during helicopter shutdown and start up except during the hydraulic system check.

Electrical power is required to turn off hydraulics. Pulling HYD circuit breaker will NOT turn off hydraulics but will disable hydraulic switch.

29-10 Hydraulic Pump

A. Removal

1. Remove tailcone cowling per § 53-23.
2. For helicopters with air conditioning:
   a. Loosen hardware securing G777-1 compressor assembly to G781-1 arm weldment.

   CAUTION

   Do not use refrigerant hose assemblies or fittings to rotate compressor. Do not rotate compressor further than necessary, to avoid damaging system wiring and refrigerant hoses or fittings.

   b. Rotate compressor down and inboard as required to disengage B173-5 v-belt from pulleys.

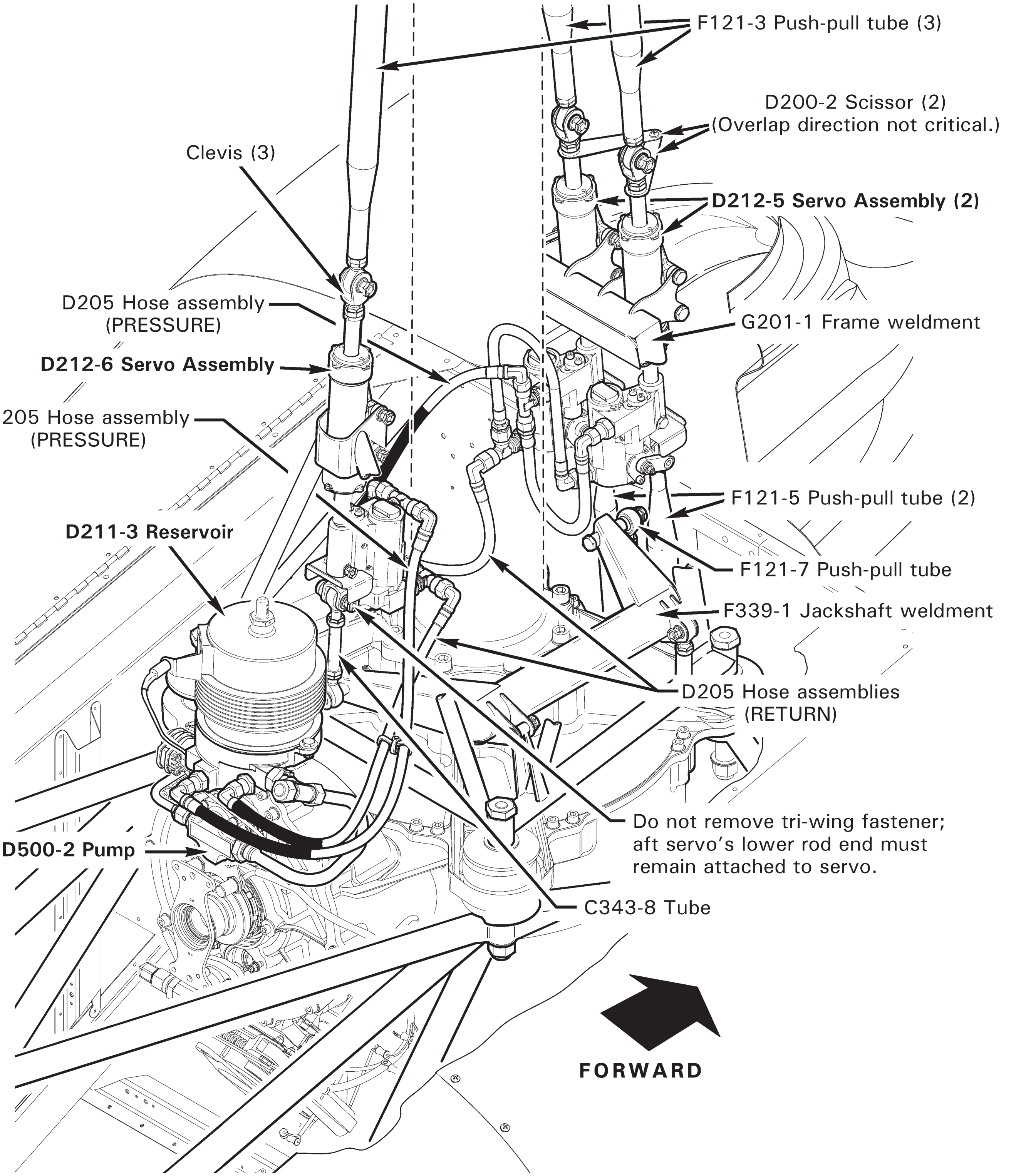

FIGURE 29-1 HYDRAULIC FLIGHT CONTROL SYSTEM

29-10 Hydraulic Pump (continued)

A. Removal (continued)

2. c. Remove hardware securing G779-1 pulley to F908-1 yoke assembly and slide pulley aft (do not scuff paint on tail rotor drive fan shaft).
3. Remove hydraulic reservoir filler-vent and temporarily install an air-tight plug.
4. Refer to Figure 12-4. Remove F902 suction line assembly and protect exposed line and fitting openings.
5. Remove F902 pressure line assembly and protect exposed line and fitting openings.
6. Remove aft jam nut from both MR rpm senders and remove both senders from bracket attached to hydraulic pump. Temporarily secure senders away from drive train to prevent damage.
7. Remove four self-locking nuts and washers securing pump to gearbox and remove pump and o-ring. Discard o-ring. Protect pump opening on gearbox.

B. Installation

1. Prelubricate new o-ring with gearbox oil and install on pump mounting flange. With pump bracket pointing down, install pump on gearbox and secure. Special torque nuts per § 20-33.
2. Install both MR rpm senders in pump bracket. Adjust clearance between both senders and both yoke magnets to 0.040/0.020 inch and hand-tighten sender jam nuts.
3. Refer to Figure 12-4. Install F902 pressure line assembly & special torque per § 20-33.
4. Install F902 suction line assembly and special torque per § 20-33.
5. Remove temporary air-tight plug from reservoir and adjust fluid level as required. Install filler-vent and special torque per § 20-33.
6. Torque stripe jam nuts and B-nuts.
7. Bleed hydraulic system per § 12-34.
8. Install a 110-4 Telatemp on aft surface of pump.
9. For helicopters with air conditioning:
    a. Position G779-1 pulley on F908-1 yoke assembly. Install hardware, standard torque nuts per § 20-32, and torque stripe per Figure 5-1.
    b. Route B173-5 v-belt onto pulleys. Rotate compressor up and outboard to tension belt, then tighten hardware securing compressor to weldment. Adjust belt until 4.5-5.5 lb of force applied mid-span deflect belt 0.16-inch. Standard torque bolts per § 20-32 and torque stripe per Figure 5-1.
10. Install tailcone cowling per § 53-23.

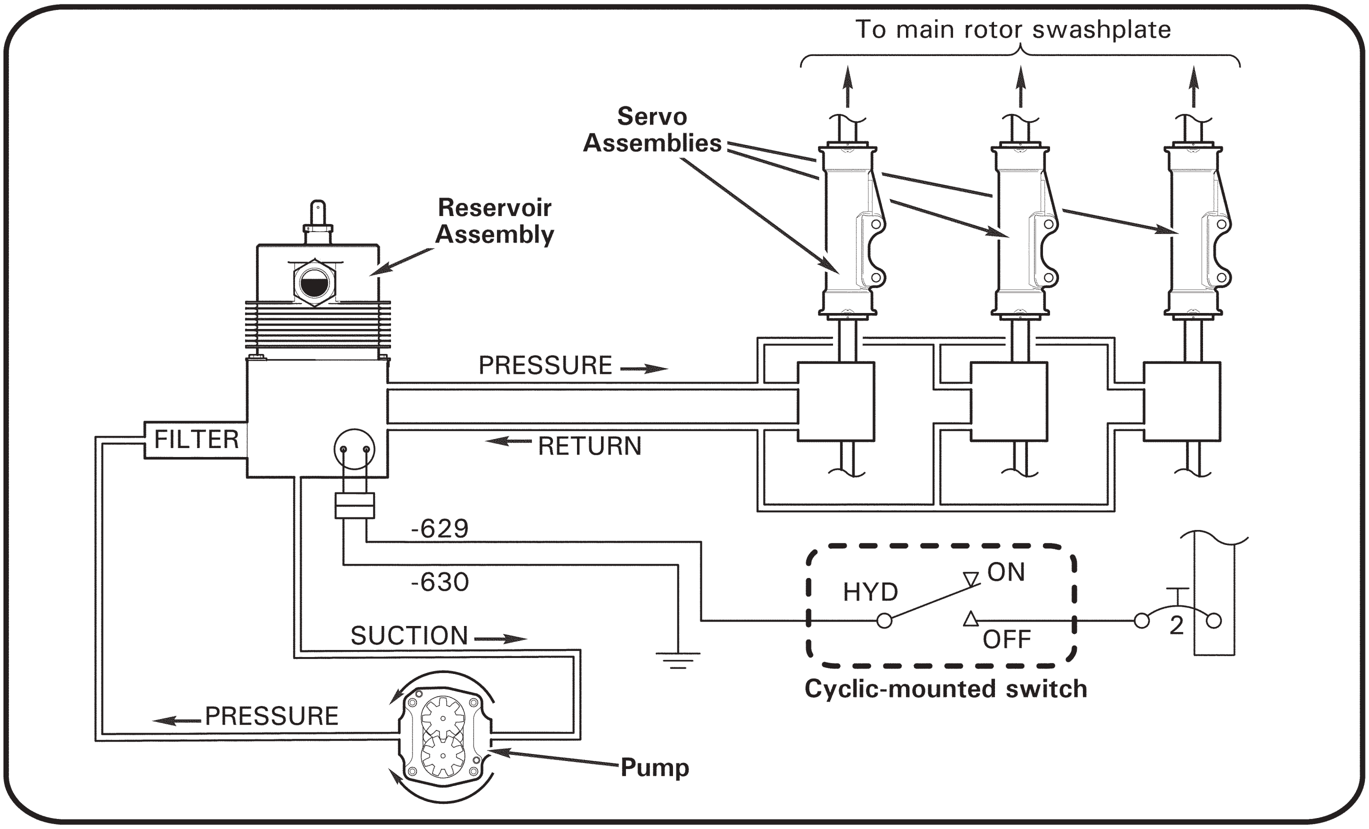

FIGURE 29-2 HYDRAULIC SYSTEM SCHEMATIC

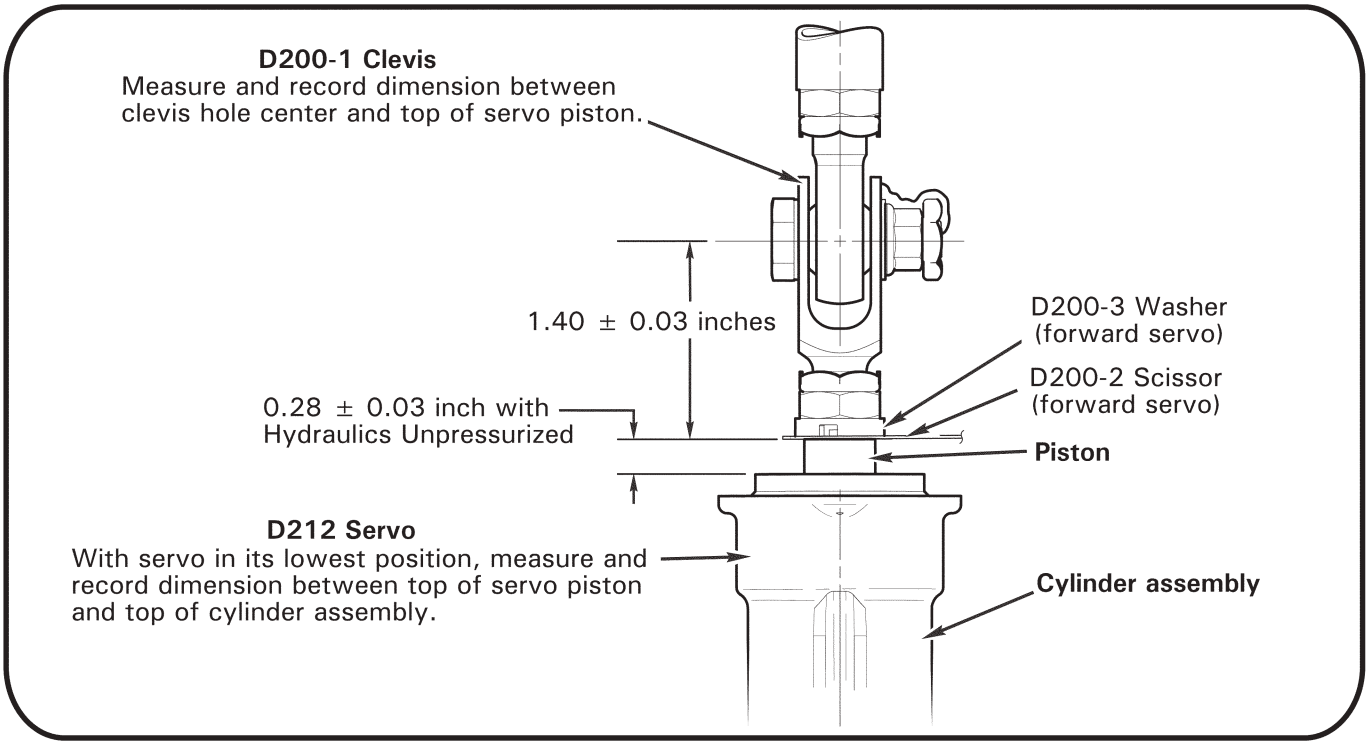

FIGURE 29-3 HYDRAULIC SERVO RIGGING

29-20 Hydraulic Reservoir

A. Removal

1. Temporarily install a "DO NOT MOVE FLIGHT CONTROLS" sign in cockpit.
2. Remove tailcone cowling per § 53-23.
3. Place a one-liter container beneath suction tee fitting on reservoir. Remove cap from tee fitting and allow reservoir fluid to drain into container. Reinstall cap and special torque per § 20-33.
4. Remove suction and pressure lines, and disconnect and cap servo supply and return hoses, from reservoir. Protect line and fitting openings.
5. Disconnect pump bypass solenoid and sight gage LED electrical connectors.
6. Remove three screws securing reservoir to gearbox and remove reservoir.
7. Note alignment of tee fittings and sight gage LED. Transfer LED and line and hose fittings from removed reservoir to replacement reservoir.

B. Installation

1. Note alignment of tee fittings and sight gage LED on removed reservoir. Transfer LED and line and hose fittings from removed reservoir to replacement reservoir. Special torque fittings per § 20-33.
2. Install reservoir on gearbox and secure with three screws.
3. Install pressure and suction lines, repositioning tee fittings as required, and special torque per § 20-33.
4. Connect servo supply and return hoses to reservoir. Position hose elbows to minimize preload and special torque per § 20-33.
5. Connect pump bypass solenoid and sight gage LED electrical connectors and ty-rap wires as required.
6. Fill reservoir with A257-15 hydraulic fluid and special torque filler vent per § 20-33.
7. Bleed hydraulic system per § 12-34.
8. Install tailcone cowling per § 53-23.

29-30 Hydraulic Servos

A. Servo Removal

> **CAUTION**
>
> Do not pressurize hydraulic system while any hydraulic system component is disconnected or removed.

1. Remove mast fairing per § 53-22. Remove tailcone cowling per § 53-23.
2. Refer to Figures 29-1 and 29-3. Perform the following measurements on all D212 hydraulic servo assemblies to be removed:
   a. Measure and record dimension between D200-1 clevis hole center & top of servo piston.
   b. Apply cyclic and collective frictions. With collective full down and hydraulics unpressurized, position cyclic stick so piston in servo to be removed is in its lowest position. Measure and record dimension between top of servo piston and top of cylinder assembly.
3. Remove hardware securing servo clevis to F121-3 push-pull tube's lower rod end.
4. a. Forward Servo: Remove hardware securing servo to F121-5 push-pull tube's upper rod end. Remove hardware joining D200-2 scissors.
   b. Aft Servo: Remove hardware securing C343-8 tube's lower rod end to F339-1 jackshaft weldment.
5. Disconnect D205 hose assemblies from servo unions and tees. Cap and plug fittings.
6. Remove hardware securing servo to G201-1 frame weldment and remove servo.
7. Aft Servo: Measure and record center-to-center dimension between aft servo's lower rod end and C343-8 tube's lower rod end. Loosen palnut and nut securing C343-8 tube to aft servo's lower rod end and remove tube.

> **CAUTION**
>
> Do not remove tri-wing fastener; aft servo's lower rod end must remain attached to servo.

> **CAUTION**
>
> Dimension between clevis hole center and top of servo piston must be 1.40 ± 0.03 inches; dimension between top of servo piston and top of cylinder assembly must be 0.28 ± 0.03 inch; dimension between C343-8 tube's rod ends must be 4.00 ± 0.03 inches. If dimension(s) are not within required range, perform main rotor rigging per § 18-40 after servo installation.

8. Remove clevis, scissor, D200-3 washer, unions, and tee fittings from servo, as applicable.
9. Actuate servo piston by hand and drain as much hydraulic fluid from servo as possible. Plug servo ports.

29-30 Hydraulic Servos (continued)

B. Servo Installation

> **CAUTION**
>
> Do not pressurize hydraulic system while any hydraulic system component is disconnected or removed.

> **CAUTION**
>
> Refer to Part A. Dimension between clevis hole center and top of servo piston must be 1.40 ± 0.03 inches; dimension between top of servo piston and top of cylinder assembly must be 0.28 ± 0.03 inch; dimension between C343-8 tube's rod ends must be 4.00 ± 0.03 inches. If dimension(s) recorded during servo removal were not within required range, or if dimension(s) are unknown, adjust to correct dimensions in Part B steps 1 and 2, proceed with servo installation thru step 10, then perform main rotor rigging per § 18-40.

1. Refer to Figures 29-1 and 29-3. Lightly coat D200-1 clevis threads with B270-21 protectant. Assemble clevis, palnut, nut, D200-3 washer (forward servo), and D200-2 scissor (forward servo), and install assembly in D212 hydraulic servo assembly piston. Adjust dimension between clevis hole center & top of servo piston to dimension recorded during servo removal, then tighten jam nut and palnut finger tight.
2. Aft Servo: Lightly coat servo's lower rod end threads with B270-21 protectant and install C343-8 tube. Adjust tube on servo's rod end, and tube's rod end, to the center-to-center dimension (between rod ends) recorded during servo removal, and with rod ends 90° to each other. Tighten jam nuts and palnuts finger tight.

> **CAUTION**
>
> Do not remove tri-wing fastener; aft servo's lower rod end must remain attached to servo.

3. Install hardware securing servo to G201-1 frame weldment. Standard torque fasteners per § 20-32 and torque stripe per Figure 5-1.
4. Forward Servos: Install hardware joining scissors (scissor overlap direction not critical); special torque nut to 25 in.-lb, special torque palnut to 5–10 in.-lb, and torque stripe per Figure 5-1.
5. Using backup wrench, align clevis parallel with helicopter's longitudinal axis, standard torque jam nut and palnut per § 20-32, and torque stripe per Figure 5-1.
6. Install hardware securing servo clevis to F121-3 push-pull tube's lower rod end. Standard torque fastener per § 20-32 and torque stripe per Figure 5-1.

29-30 Hydraulic Servos (continued)

B. Servo Installation (continued)

7. a. Forward Servo: Install hardware securing servo to F121-5 push-pull tube's upper rod end. Standard torque fastener per § 20-32 and torque stripe per Figure 5-1.

   b. Aft Servo: Install hardware securing C343-8 tube's lower rod end to F339-1 jackshaft weldment. Standard torque fastener per § 20-32 and torque stripe per Figure 5-1. Using backup wrench, standard torque jam nuts and palnuts, and torque stripe per Figure 5-1.

8. Refer to Figure 5-2. Verify proper rod end centering on all push-pull tubes attached to servos.

9. Remove caps and plugs. Lubricate new packings using A257-15 hydraulic fluid and install packings on servo unions and tees. Install fittings with associated hardware in servo ports and connect D205 hose assemblies to fittings. Align fittings to minimize hose preload and ensure hose clearance with surrounding structure; special torque fittings per § 20-33 and torque stripe per Figure 5-1. Special torque hose B-nuts per § 20-33 and torque stripe per Figure 5-1.

10. Bleed hydraulic system per § 12-34.

11. Perform the following measurements on all servos just installed:

   a. Measure and record dimension between clevis hole center & top of servo piston.

   b. Apply cyclic and collective frictions. With collective full down and hydraulics unpressurized, position cyclic stick so piston in servo just installed is in its lowest position. Measure and record dimension between top of servo piston and top of cylinder assembly.

CAUTION

Dimension between clevis hole center and top of servo piston must be 1.40 ± 0.03 inches; dimension between top of servo piston and top of cylinder assembly must be 0.28 ± 0.03 inch; dimension between C343-8 tube's rod ends must be 4.00 ± 0.03 inches. If dimension(s) recorded are not within required range, adjust to correct dimensions in Part B steps 1 and 2, proceed with servo installation thru step 10, then perform main rotor rigging per § 18-40.

12. Install tailcone cowling per § 53-23. Install mast fairing per § 53-22.

29-30 Hydraulic Servos (continued)

C. Inspection

1. Disconnect servo from upper push-pull tube per § 29-30 Part A steps 1 thru 3.
2. Remove clevis, scissor, and D200-3 washer from servo, as applicable.
3. Visually inspect threaded bore in piston with borescope. Replace servo if corrosion is detected.
4. Assemble servo and connect to upper push-pull tube per § 29-30 Part B steps 1, 4, 5, 6, 8, 11, and 12.

Intentionally Blank

CHAPTER 32

LANDING GEAR

Section	Title	Page
32-00	Description	32.1
32-10	Landing Gear Assembly	32.1
32-20	Cross Tubes	32.5
32-30	Skid Tubes	32.7
32-31	Skid Shoes	32.8
32-32	Skid Extension Replacement	32.8
32-33	Ground Handling Wheel Support Replacement	32.8
32-40	Fairing Assemblies	32.9
32-50	Maintenance	32.9
32-60	Pop-Out Floats Installation	32.11
32-61	Cylinder Assembly	32.11
32-62	Lever Rigging and Shear-Rivet Replacement	32.17
32-63	Float Installation	32.19
32-64	System Maintenance	32.22

Intentionally Blank

CHAPTER 32

LANDING GEAR

32-00 Description

A spring and yield skid type landing gear is used. Most hard landings will be absorbed elastically. However, in an extremely hard landing, the struts will hinge up and outward as the center crosstube yields (takes permanent set) to absorb the impact. Slight yielding of the aft crosstube is acceptable. For tail skid height limitation, see § 32-20. For hard landing inspection, see § 5-65.

Hardened steel wear shoes are mounted on the bottom of the skids. Inspect skid tubes and skid shoes per § 32-30, particularly if autorotation landings with ground contact have been performed.

Pop-out float landing gear is available as optional equipment. See § 32-60 for pop-out float installation description.

32-10 Landing Gear Assembly

A. Removal

1. Open cabin aft doors and baggage compartment door. Remove engine cowling per § 53-21.
2. Refer to § 6-70; remove G308-2 and two F475-6 cross tube covers. Remove fairing assemblies per § 32-40.
3. Refer to Figure 32-1. If installed, remove hardware securing A936-3 (ground) wire assembly to aft, right landing gear attachment.
4. Using putty knife or plastic scraper, cut sealant securing four cross tube rain caps to landing gear assembly and remove caps. Remove sealant residue from caps, cross tubes, and strut assemblies. Clean surfaces with solvent.
5. Hoist helicopter per § 7-20. Raise skids above ground approximately one foot.

CAUTION
Support landing gear assembly as mounting bolts are removed. Do not damage forward cross tube hinged inspection cover.

6. Remove hardware securing forward, right strut assembly & forward cross tube to fuselage support. Mounting bolt access hole is located on aft, right seat box forward wall.
7. Remove hardware securing aft, right strut assembly & aft cross tube to fuselage support. Mounting bolt access hole is located on baggage compartment aft wall.
8. Rotate forward, left shackle to align mounting bolt with access hole on aft, left seat box forward wall. Remove hardware securing landing gear to shackle.

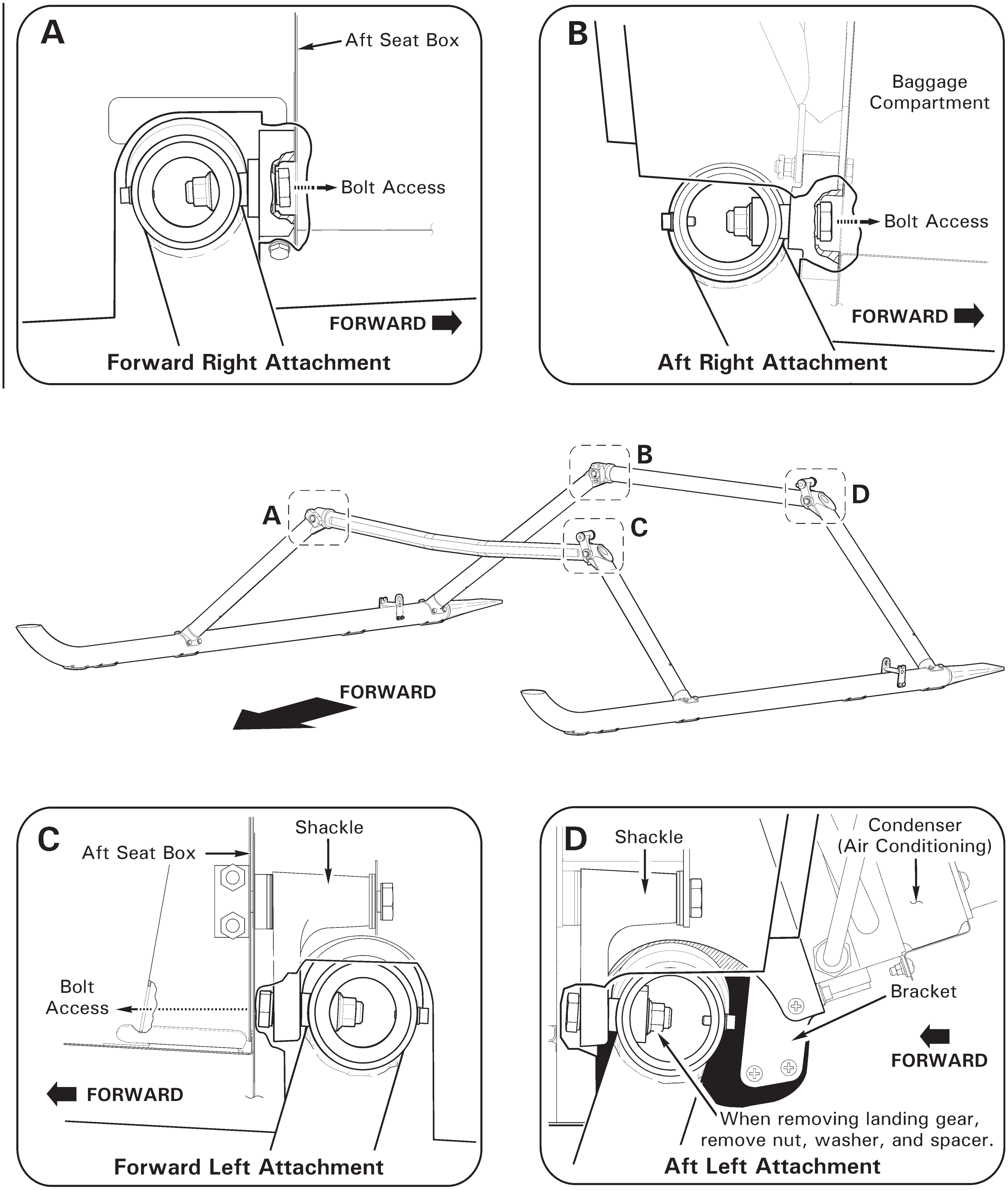

FIGURE 32-1 LANDING GEAR ATTACHMENT

32-10 Landing Gear Assembly (continued)

A. Removal (continued)

9. If air conditioning is installed, remove hardware securing G787-3 and G787-4 brackets to condenser support and remove brackets.
10. Remove nut, washer, and spacer from aft, left mounting bolt (bolt stays in place). Carefully lower forward cross tube below belly, then move assembly aft, off of aft left bolt.

B. Installation

WARNING
Landing gear mounting bolts are critical fasteners. See § 20-30 for torque requirements.

CAUTION
Support landing gear assembly as mounting bolts are installed. Do not damage forward cross tube hinged inspection cover.

1. Hoist helicopter per § 7-20 to required height.
2. Refer to Figure 32-1. Align mounting bolt (in place) with aft, left landing gear attachment. Install hardware, special torque fastener per § 20-33, & torque stripe per Figure 5-1. If air conditioning is installed, install hardware securing G787-3 and G787-4 brackets to condenser support. Verify security.
3. Insert hardware thru access hole on aft, left seat box forward wall, and thru shackle. Align mounting bolt with forward, left landing gear attachment. Install hardware, special torque bolt per § 20-33, & torque stripe per Figure 5-1.
4. Insert hardware thru right side access hole on baggage compartment aft wall and aft, right landing gear attachment. Install hardware, special torque bolt per § 20-33, & torque stripe per Figure 5-1.
5. Insert hardware thru access hole on aft, right seat box forward wall and forward, right landing gear attachment. Install hardware, special torque bolt per § 20-33, & torque stripe per Figure 5-1.
6. Lower helicopter per § 7-20. Close cabin aft doors and baggage compartment door.
7. If installed, verify surface under terminal is clean and dry and install hardware securing A936-3 (ground) wire assembly to aft, right landing gear attachment. Standard torque screw per § 20-32 and torque stripe per Figure 5-1.
8. Verify rain caps and bonding surfaces are clean and dry. Bond caps to landing gear cross tubes (painted side against cross tube, window up) using B270-1 sealant. Remove excess adhesive and allow to cure.

32-10 Landing Gear Assembly (continued)

B. Installation

9. Refinish landing gear as required per Chapter 20.
10. When surfaces are dry, install engine cowling per § 53-21. Refer to § 6-70; install G308-2 and two F475-6 cross tube covers. Install fairing assemblies per § 32-40.
11. Perform electrical bond check per the following:
    a. Remove aux fuel tank per § 28-51, if installed.
    b. Disconnect battery negative (ground) cable, then positive cable from battery.
    c. Attach positive (red) and negative (black) leads to digital milliohm meter (Model 310, BK Precision or similar).
    d. Attach negative (black) leads to battery ground strap; attach positive (red) leads to the following ground locations and check readings:
        i. Tailcone forward bay (strobe light ground stud)
        ii. Horizontal stabilizer (tail light ground stud)
        iii. Main gearbox (chip detector housing or MR temperature switch screw)
        iv. Left and right skid tube (ground handling support)
        v. Avionics ground (C448 terminal assembly)
        vi. Upper console ground (G050/G060)
        vii. Battery charge negative post
    e. Verify resistance at each location is maximum 1 ohm; if more than 1 ohm, check installation points and repeat steps as required.

Intentionally Blank

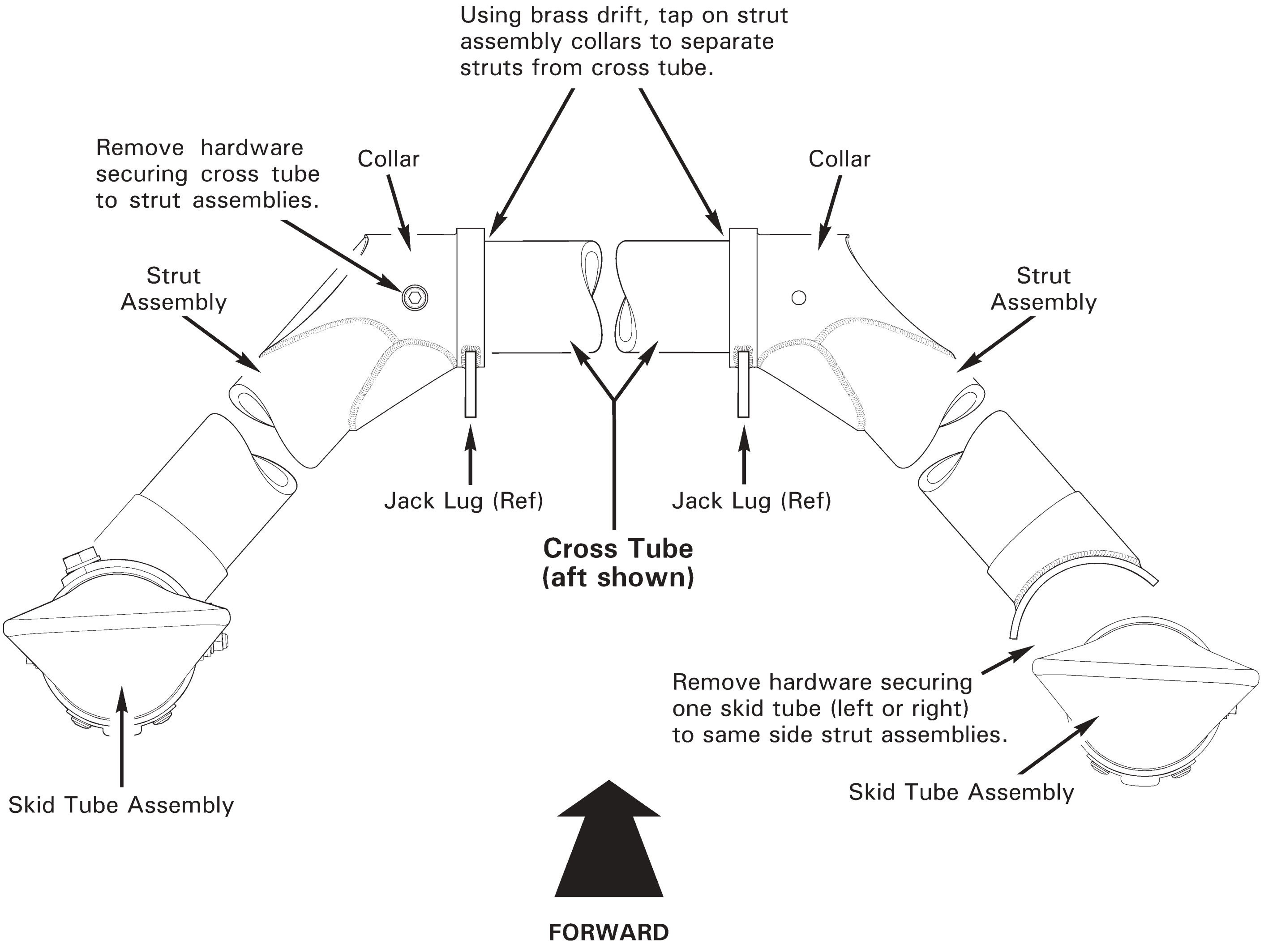

FIGURE 32-2 CROSS TUBE REMOVAL

32-20 Cross Tubes

A. Inspection

For helicopters with F014-1 (standard) landing gear or F014-4 (pop-out float) landing gear, replace aft cross tube if tail skid height is less than 38 inches from ground when aircraft is minimally loaded on level pavement.

For helicopters with F014-5 (extended) landing gear, replace aft cross tube if tail skid height is less than 30 inches from ground when aircraft is minimally loaded on level pavement.

For hard landing inspection, see Section 5-65.

B. Removal

1. Remove landing gear per Section 32-10.
2. Refer to Figure 32-2. Remove hardware securing one skid tube (left or right) to same side strut assemblies.
3. Remove hardware securing cross tube (to be replaced) to strut assemblies. Using brass drift, tap on strut assembly collars to separate struts from cross tube. Do not tap on jack tabs.

C. Installation

Refer to R66 Illustrated Parts Catalog (IPC) Figure 32-1.

NOTE
When installing A936-3 (ground) wire assembly, verify finish is removed from surface under wire terminal.

1. Refer to Figure 32-2. Lightly coat mating surfaces of cross tube with zinc-chromate or epoxy primer using approved materials per Section 20-70. While primer is wet, install cross tube into strut assemblies and align fastener holes.
2. Install hardware securing cross tube to strut assemblies, standard torque screws per Section 20-32, and torque stripe per Figure 5-1.
3. Install hardware securing left or right skid tube to strut assemblies, standard torque bolts per Section 20-32, and torque stripe per Figure 5-1.
4. Install landing gear per Section 32-10.

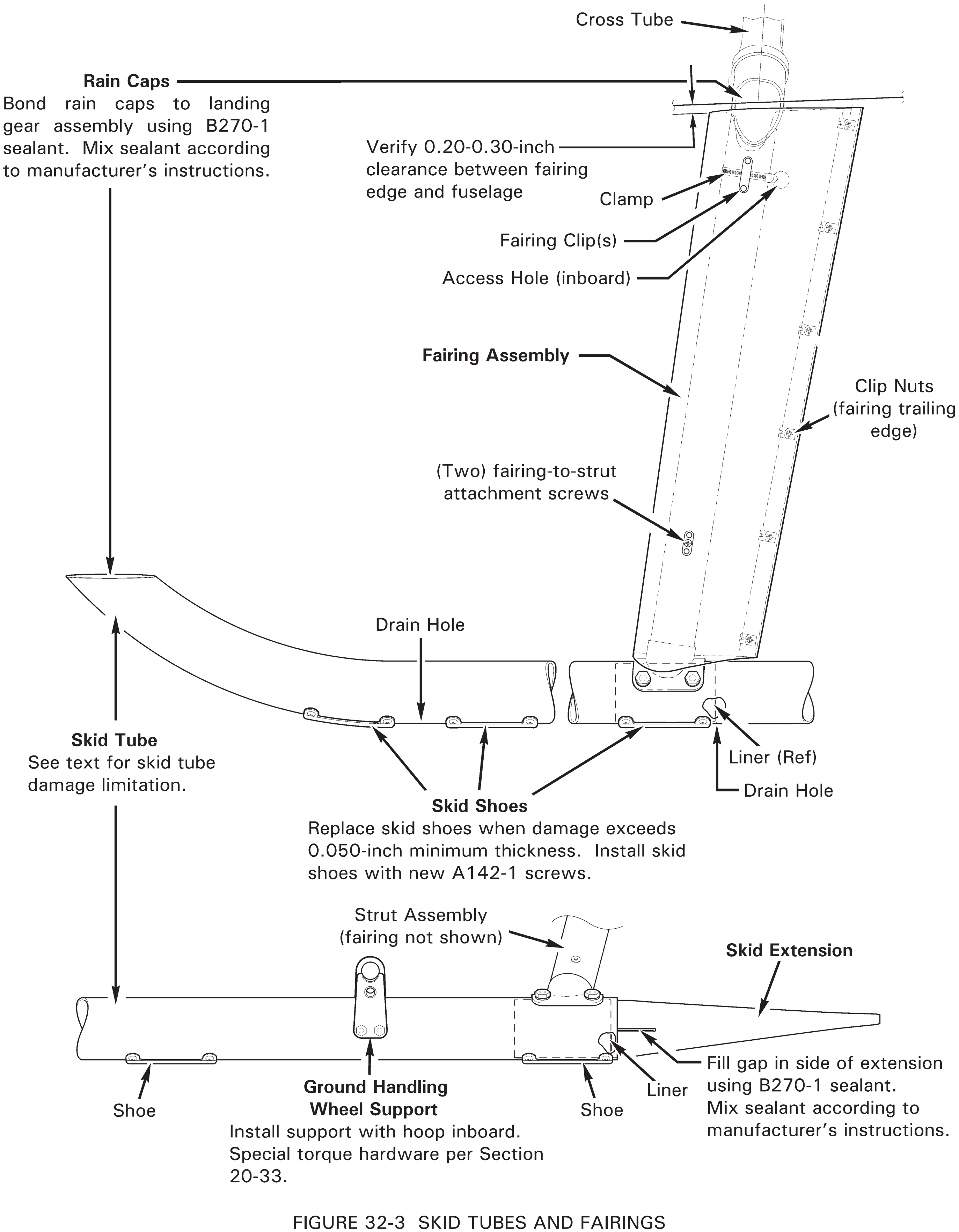

FIGURE 32-3 SKID TUBES AND FAIRINGS
(Strut and skid tube angles exaggerated for clarity)

32-30 Skid Tubes

Refer to R66 Illustrated Parts Catalog (IPC) Figure 32-1.

> **CAUTION**
>
> Minimize personnel movement around raised helicopter. Use caution when working under raised skid tubes.

A. Inspection

1. Install ground handling wheels per Section 9-11.

2. Pull down on tail rotor gearbox and place blocks under skid tubes, forward of forward strut assemblies. Skids should be approximately parallel with the ground.

3. Measure damage on left or right skid tube. Replace skid tube if damage exceeds the following limits:

   a. 0.030 inch maximum depth longitudinal scratch (no length limit).
   b. 0.030 inch maximum depth and 0.50 inch maximum length circumference scratch.
   c. 0.500 inch maximum width flat spot.

4. Measure the thickness of skid tube's skid shoes (five per skid). Replace a skid shoe per Section 32-31 if damage exceeds 0.050 inch minimum thickness. Repeat steps on opposite skid tube.

B. Removal

1. Jack or hoist helicopter per Sections 7-10 or 7-20. Raise skids above ground approximately 4 inches.

2. Refer to Figure 32-3. Remove hardware securing left or right skid tube to same side strut assemblies.

C. Installation

1. Jack or hoist helicopter per Sections 7-10 or 7-20 to required height.

2. Refer to Figure 32-3. Install hardware securing skid tube to strut assemblies. Standard torque bolts per Section 20-32 and torque stripe per Figure 5-1.

3. Lower helicopter per Sections 7-10 or 7-20.

32-31 Skid Shoes

Refer to R66 Illustrated Parts Catalog (IPC) Figure 32-1.

A. Inspection

Inspect skid tubes and skid shoes per Section 32-30.

B. Replacement

1. Refer to Figure 32-3. Remove and discard hardware securing skid shoe to skid tube. Discard a shoe damaged beyond limits in Section 32-30.
2. Install new A142-1 screws to secure skid shoe to skid tube. Standard torque screws per Section 20-32.

32-32 Skid Extension Replacement

Refer to R66 Illustrated Parts Catalog (IPC) Figure 32-1.

1. Remove skid tube per Section 32-30.
2. Refer to Figure 32-3. Remove and discard hardware securing aft skid shoe to skid tube. Remove skid extension.
3. Clean interior of skid tube as practical. Install new skid extension and align fastener holes.
4. Install new A142-1 screws to secure aft skid shoe to skid tube. Standard torque screws per Section 20-32.
5. Install skid tube per Section 32-30.
6. Fill gap in side of skid extension using B270-1 sealant. Mix sealant according to manufacturer's instructions.

32-33 Ground Handling Wheel Support Replacement

Refer to R66 Illustrated Parts Catalog (IPC) 32-1.

1. Refer to Figure 32-3. Remove hardware securing support weldment to skid tube and remove support.
2. Install hardware securing new support weldment to skid tube. Verify correct support orientation. Special torque hardware per Section 20-33 and torque stripe per Figure 5-1.

32-40 Fairing Assemblies

A. Removal

1. Refer to Figure 32-3. Remove screws securing fairing assembly together at trailing edge.
2. Remove screws securing fairing assembly to strut assembly. Unscrew clamp through fairing inboard access hole and remove fairing.

B. Installation

1. Refer to Figure 32-3. Verify fairing assembly clip nuts are installed. Verify clamp threads through fairing clips, with hex facing inboard access hole.
2. Position fairing assembly on strut assembly and install screws securing fairing to strut.
3. Tighten clamp, and special torque hex through fairing assembly inboard access hole per § 20-33.
4. Install screws securing fairing assembly together at trailing edge.
5. Verify 0.20–0.30 inch clearance between fairing assembly edge and fuselage. Remove and trim fairing as required; reinstall per preceding steps.

32-50 Maintenance

1. Refer to Figure 32-3. Verify drain holes in bottom of skid tubes are free of obstructions (two per skid, between two forward skid shoes and aft of skid shoe at forward strut assembly).
2. Refinish landing gear to prevent corrosion per Chapter 20.
3. Inspect skid tubes and skid shoes per § 32-30, especially following touch-down autorotations or running take-offs or landings.
4. Verify skid tube and strut assembly rain caps are properly sealed. Replace or re-seal rain caps per the following:
    a. Using putty knife or plastic scraper, cut sealant securing rain cap to landing gear assembly and remove cap. Remove sealant residue from caps, cross tubes, and/or strut assemblies. Clean surfaces with solvent.
    b. Verify rain caps and bonding surfaces are clean and dry. Bond caps to landing gear assembly using B270-1 sealant. Mix sealant according to manufacturer's instructions.

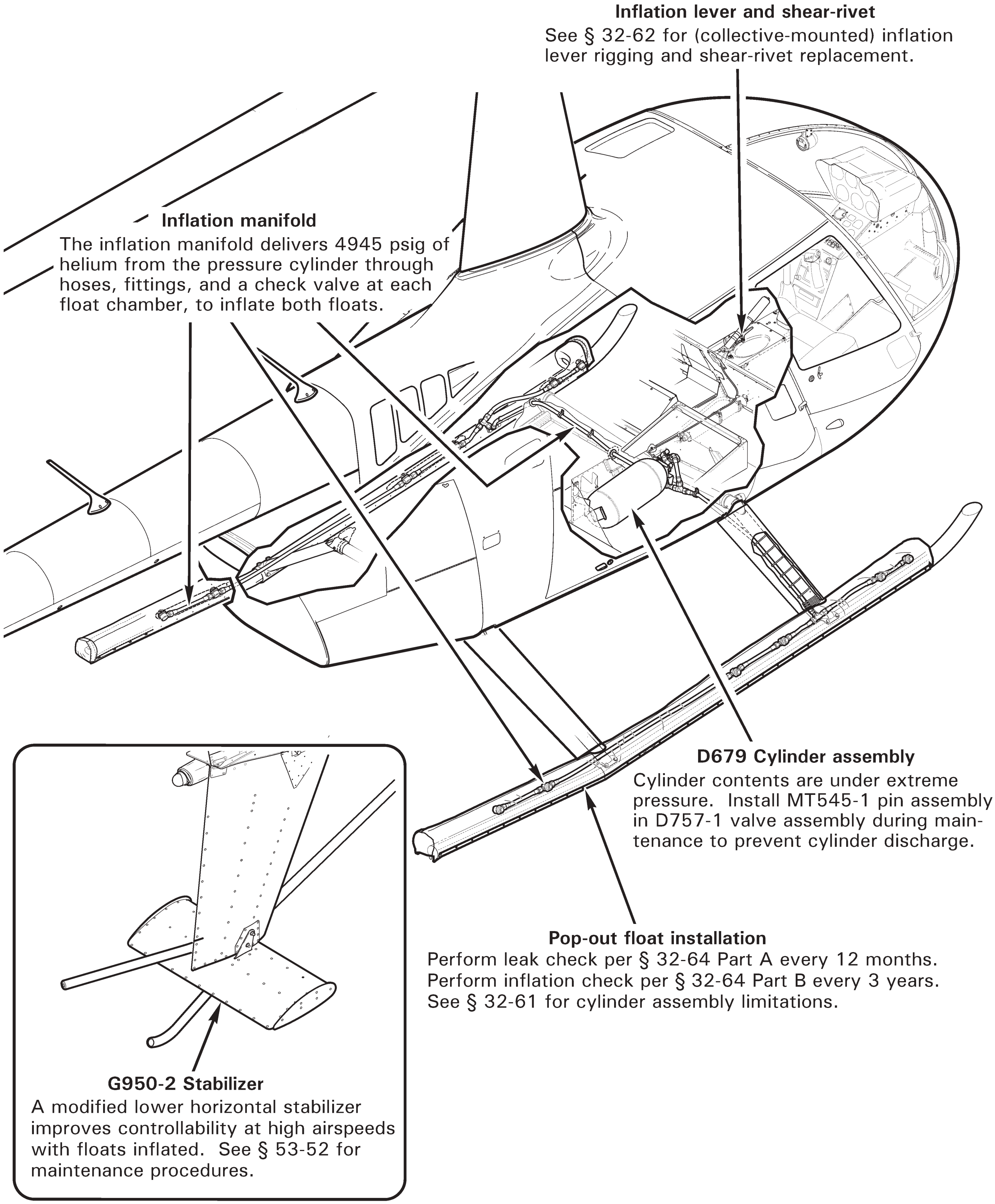

FIGURE 32-4 POP-OUT FLOATS INSTALLATION

32-60 Pop-Out Floats Installation

Pop-out floats are optional equipment for R66 helicopters. The pop-out float installation includes inflatable floats stowed in protective covers secured to the skid tubes, a pressure cylinder located in the compartment beneath the right aft seat, an inflation manifold, an inflation lever located on the pilot's collective stick, and a modified aux stabilizer.

The valve located on top of the pressure cylinder has a pressure gage, a thermal relief valve which releases pressure if exposed to excessive heat (281° F), a metal sealing disk, and a spring-loaded pin.

The red inflation lever on the pilot's collective stick is equipped with a spring-loaded safety to prevent inadvertent float inflation. To inflate the floats, the safety is pushed in and rotated from LOCKED to READY position, then the inflation lever is squeezed with enough force to shear the aluminum rivet. The spring-loaded pin in the pressure cylinder valve punctures the metal sealing disk, and 4945 psig (nominal, at 20° C) of helium is released into the inflation manifold to inflate both floats.

The manifold consists of hoses, fittings, and a check valve at each of the six float chambers (per float). Each float chamber has a topping valve for manual inflation, and a pressure relief valve to vent excess internal pressure.

A modified aux stabilizer improves controllability at high airspeeds with floats inflated.

32-61 Cylinder Assembly

Refer to R66 Illustrated Parts Catalog (IPC) Figure 32-7.

NOTE

Cylinders are discharged during float inflation check every 3 years. Cylinder hydrostatic test is required every 5 years. Cylinder life-limit is 15 years from date of manufacture. To ensure cylinder limitations are not overflown, returning to service cylinders with more than 2 years since hydrostatic test or 12 years since date of manufacture is not recommended.

WARNING

D679 Cylinder contents are under extreme pressure. Install MT545-1 pin assembly in D757-1 valve assembly during maintenance to prevent cylinder discharge.

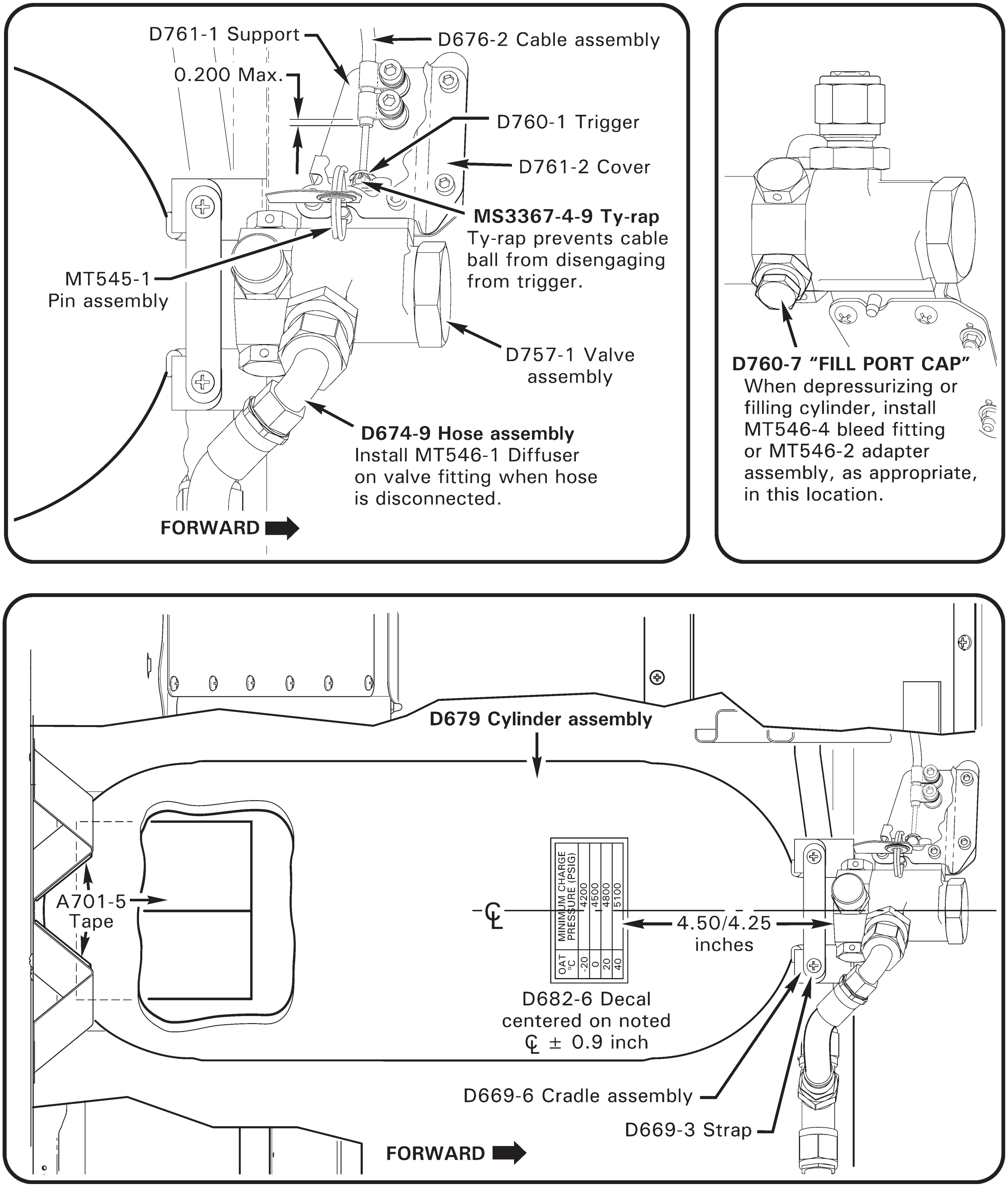

FIGURE 32-5 POP-OUT FLOATS CYLINDER ASSEMBLY

32-61 Cylinder Assembly (continued)

A. Removal

1. Refer to Figure 32-5. Hinge right aft seat assembly forward. Install MT545-1 pin assembly in D757-1 valve assembly.
2. Disconnect D674-9 hose assembly from valve fitting. Install MT546-1 diffuser on valve fitting and special torque diffuser to 120 in.-lb. Cap hose to prevent foreign object contamination.
3. Remove hardware securing D761-2 cover to valve and D761-1 support. Remove cover.
4. Remove hardware securing D761-1 support to valve. Do not kink cable.
5. Cut and discard MS3367-4-9 ty-rap secured to D760-1 trigger. Disengage D676-2 cable assembly ball from trigger, but do not kink cable.
6. Remove screws securing D669-3 strap to D669-6 cradle assembly and remove strap. Carefully remove cylinder.

B. Depressurization

CAUTION

Use appropriate eye and hearing protection. Do not service cylinder assembly while cylinder is installed in helicopter.

1. Remove cylinder per § 32-61 Part A. Verify MT545-1 pin assembly and MT546-1 diffuser are properly installed.
2. Refer to Figure 32-5. Remove D760-7 cap (etched with "FILL PORT") from valve assembly. A loud pop may be heard when cap's seal is broken.
3. In a well-ventilated area, slowly screw MT546-4 bleed fitting assembly into fill-port until the noise of escaping gas is heard. Screw fitting in or out to adjust flow rate. Finish bleeding cylinder with bleed fitting fully in. When noise ceases, verify cylinder pressure gage indicates zero. Remove bleed fitting.
4. Install cap in valve assembly and special torque cap to 40 in.-lb.
5. Evaluate cylinder life and hydrostatic test status.

32-61 Cylinder Assembly (continued)

C. Filling

CAUTION

Use appropriate eye and hearing protection. Do not service cylinder assembly while cylinder is installed in helicopter.

WARNING

ONLY cylinders labeled "DOT-E 10915-4945" or "DOT-SP 10915-4945" may be refilled. Cylinders labeled "DOT-E 10915-4500" must be returned to RHC for exchange/upgrade.

WARNING

Verify D757-1 (gray) valve assembly is engraved with "D758-4" or has a data plate indicating B900-8 modification.

Filling equipment (pumps, hoses, fittings, etc.) must be rated for 6000 psi minimum working pressure and be in good condition.

Cylinder temperature and pressure must be kept within safe limits. Monitor pressure gage and use thermocouple or other appropriate temperature probe to monitor temperature on face of thermal relief fitting during fill. Do not allow temperature to exceed 50ºC (122ºF) or pressure to exceed 5500 psig. If limits are approached, stop fill and allow cylinder to cool and pressure to drop before continuing. Placing cylinder in a water bath and using slow to moderate fill rates is recommended. If using water bath, keep water level below valve assembly to avoid water contamination of valve.

1. Evaluate cylinder life and hydrostatic test status.
2. Refer to Figure 32-5. Install MT545-1 pin assembly in D757-1 valve assembly. Install MT546-1 diffuser on valve fitting and special torque diffuser to 120 in.-lb.
3. Remove D760-7 cap (etched with "FILL PORT") from valve assembly. A loud pop may be heard when cap's seal is broken.
4. Install MT546-2 adapter assembly into fill port and special torque adapter to 40 in.-lb. Attach fill hose to adapter.
5. Fill with 99.98% minimum purity (industrial grade) helium per chart below:

Ambient Temperature (ºC)	Pressure (psig)
-20	4268
-10	4437
0	4606
10	4776
20	4945
30	5114
40	5283

32-61 Cylinder Assembly (continued)

C. Filling (continued)

6. Allow cylinder and valve to cool to ambient temperature. Top off with helium to compensate for any pressure loss due to cooling.

7. Remove fill hose and MT546-2 adapter assembly.

8. Remove & discard old o-ring from cap. Lightly coat new MS28778-2 o-ring with A257-19 lubricant and install o-ring on fill-port cap at base of threads. Install cap in valve assembly and special torque cap to 40 in.-lb.

D. Installation

WARNING

Verify D757-1 (gray) valve assembly is engraved with “D758-4” or has a data plate indicating B900-8 modification.

1. Fill cylinder per Section 32-61 Part C, if not previously accomplished.

2. Refer to Figure 32-5. Install MT545-1 pin assembly in D757-1 valve assembly.

3. Hinge right aft seat assembly forward. Verify A701-5 (anti-chafe) tape protects cylinder where cylinder base contacts cabin structure in three locations. Carefully position cylinder in D669-6 cradle assembly.

4. Engage D676-2 cable assembly ball in D760-1 trigger; do not kink cable. Install MS3367-4-9 ty-rap as shown. Cinch ty-rap until snug without over-tightening, and trim tip flush with head. Install hardware securing D761-1 support to valve.

5. Verify cable housing protrudes through clamps on support flush-to-0.200 inch maximum. Adjust as necessary.

6. Rotate cylinder as required to minimize cable bending and to ensure clearance with cabin structure.

7. Verify D682-6 decal is in specified location. If decal location is incorrect, remove old decal and install new decal on cylinder. Install screws securing D669-3 strap to cradle assembly.

8. Install hardware securing D761-2 cover to valve and D761-1 support.

9. Remove MT546-1 diffuser, if installed. Connect D674-9 hose assembly to valve fitting. Orient hose as required to maintain miminum 0.25 inch clearance to cylinder and adjacent vertical panel. Special torque B-nut per Section 20-33 and torque stripe per Figure 5-1.

10. Rig inflation lever and replace shear-rivet per Section 32-62.

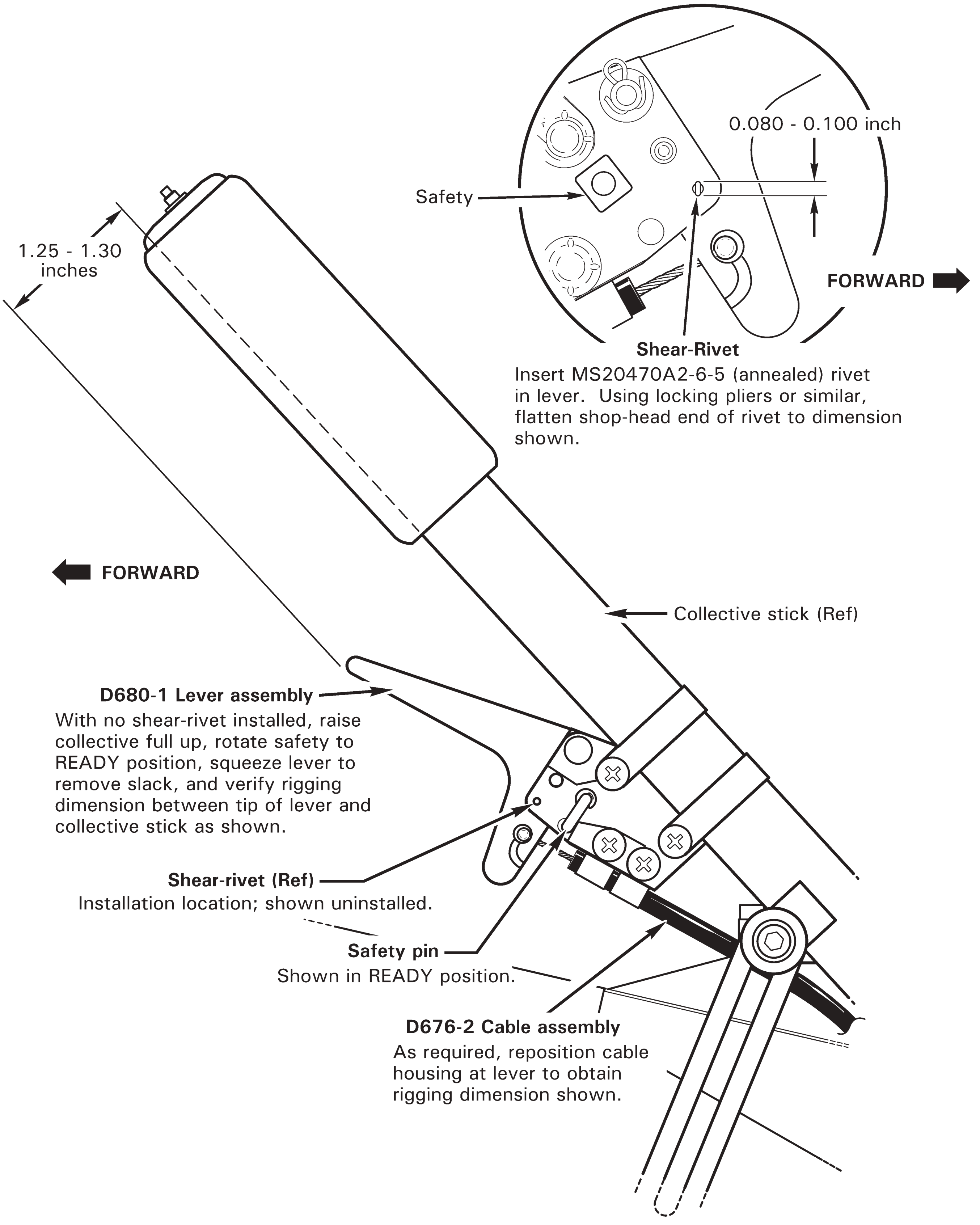

FIGURE 32-6 POP-OUT FLOATS LEVER RIGGING AND SHEAR-RIVET REPLACEMENT

32-62 Lever Rigging and Shear-Rivet Replacement

Refer to R66 Illustrated Parts Catalog (IPC) Figure 32-9.

WARNING

D679 Cylinder contents are under extreme pressure. Install MT545-1 pin assembly in D757-1 valve assembly during maintenance to prevent cylinder discharge.

WARNING

Install MS20470A2-6-5 (or MS20470A2-6.5) annealed rivet in lever assembly or rivet may be too hard to shear.

1. Install cylinder per Section 32-61 Part D, if not previously accomplished. Install MT545-1 pin assembly in D757-1 valve assembly.
2. Refer to Figure 32-6. With no shear-rivet installed, raise collective full up, push in and rotate D680-1 lever assembly safety to READY position, squeeze lever to remove cable slack, and verify 1.25 - 1.30 in. between tip of lever and collective stick as shown. As required, reposition D676-2 cable assembly housing at lever to obtain dimension.
3. Push in and rotate lever safety to LOCKED position. Simultaneously squeeze lever and verify no preload in cable thru full collective travel.
4. Refer to Figure 32-6. Insert MS20470A2-6-5 (or MS20470A2-6.5) rivet in lever as shown. Using locking pliers or similar, flatten shop-head end of rivet to 0.080-0.100 in.
5. Verify lever safety is in LOCKED position. Remove MT545-1 pin assembly from D757-1 valve assembly.

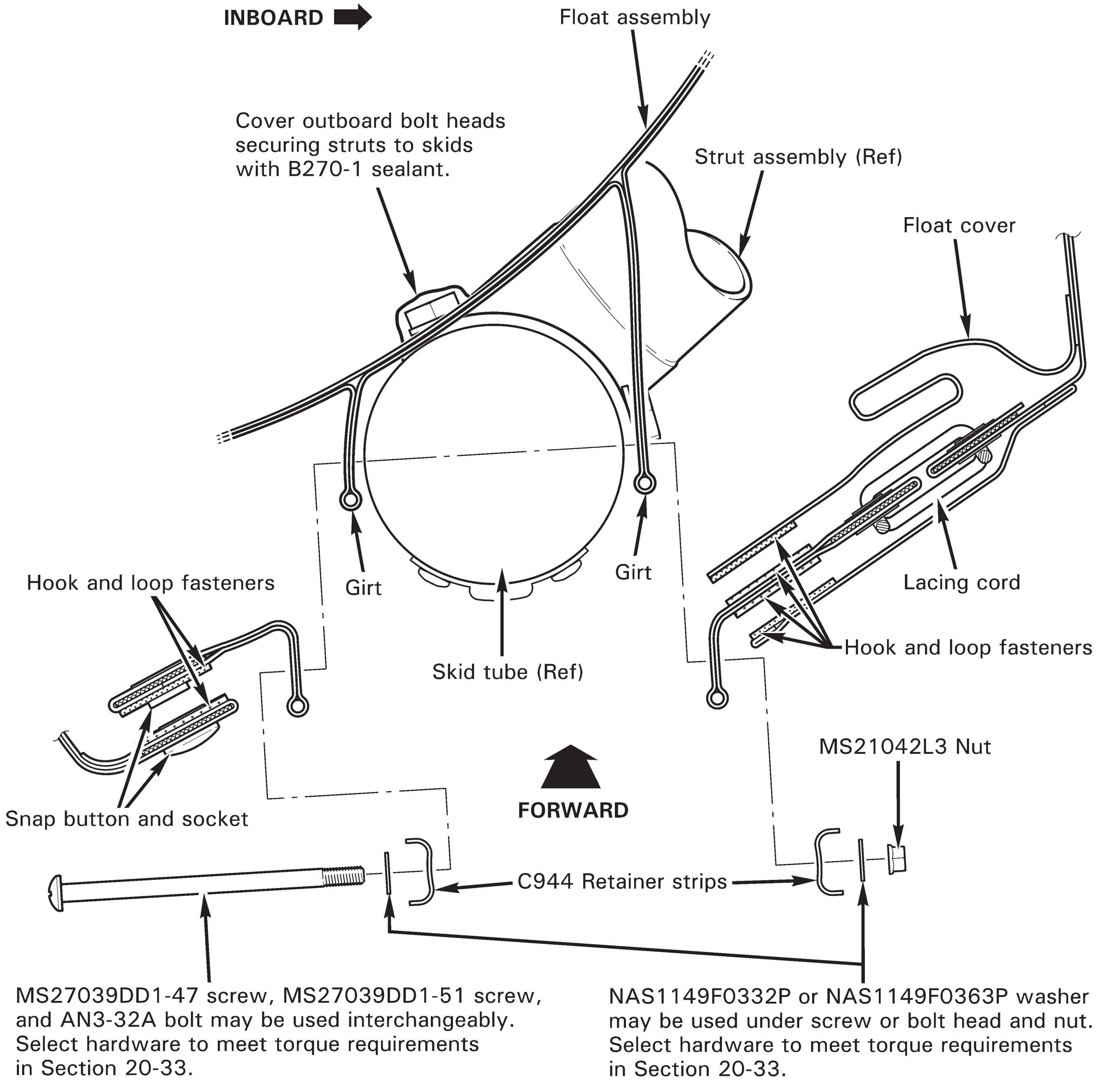

FIGURE 32-7 POP-OUT FLOATS FLOAT INSTALLATION

32-63 Float Installation

WARNING
D679 Cylinder contents are under extreme pressure. Install MT545-1 pin assembly in D757-1 valve assembly during maintenance to prevent cylinder discharge.

A. Removal

NOTE
Floats are subject to damage during removal. Remove floats if necessary for repairs.

1. Refer to Figure 32-5. Hinge right aft seat assembly forward. Install MT545-1 pin assembly in D757-1 valve assembly.
2. Disconnect D674-12 hose assembly from T-fitting near float. Cap fittings to prevent foreign object contamination.
3. Refer to Figure 32-7. Detach float cover hook and loop tape inboard of skid and loosen lacing.
4. Remove hardware securing float to skid tube, and skid extension.
5. Use care when removing C944 retainer strips from girts, and when separating girts from skid tube and skid extension. Repeat steps for opposite float.

B. Installation

1. Refer to Figure 32-7. Verify (outboard) bolt heads securing struts to skids are covered with B270-1 sealant. Apply additional sealant as required.
2. Position deflated float over skid tube and skid extension. Align holes in C944 retainer strips, float covers, float girts, and skid and install hardware. Special torque nuts per § 20-33.
3. Inflate float with filtered, oil-free, dry air to 3.0 psig via topping valves.
4. Remove protective caps and connect D674-12 hose assembly to T-fitting near float. Orient connection as required to minimize preload. Special torque hose B-nut per § 20-33, apply B270-22 protectant to exposed aluminum surfaces on hose B-nut and T-fitting, and torque stripe per Figure 5-1. Repeat steps for opposite float.
5. Pack floats per § 32-63 Part C.

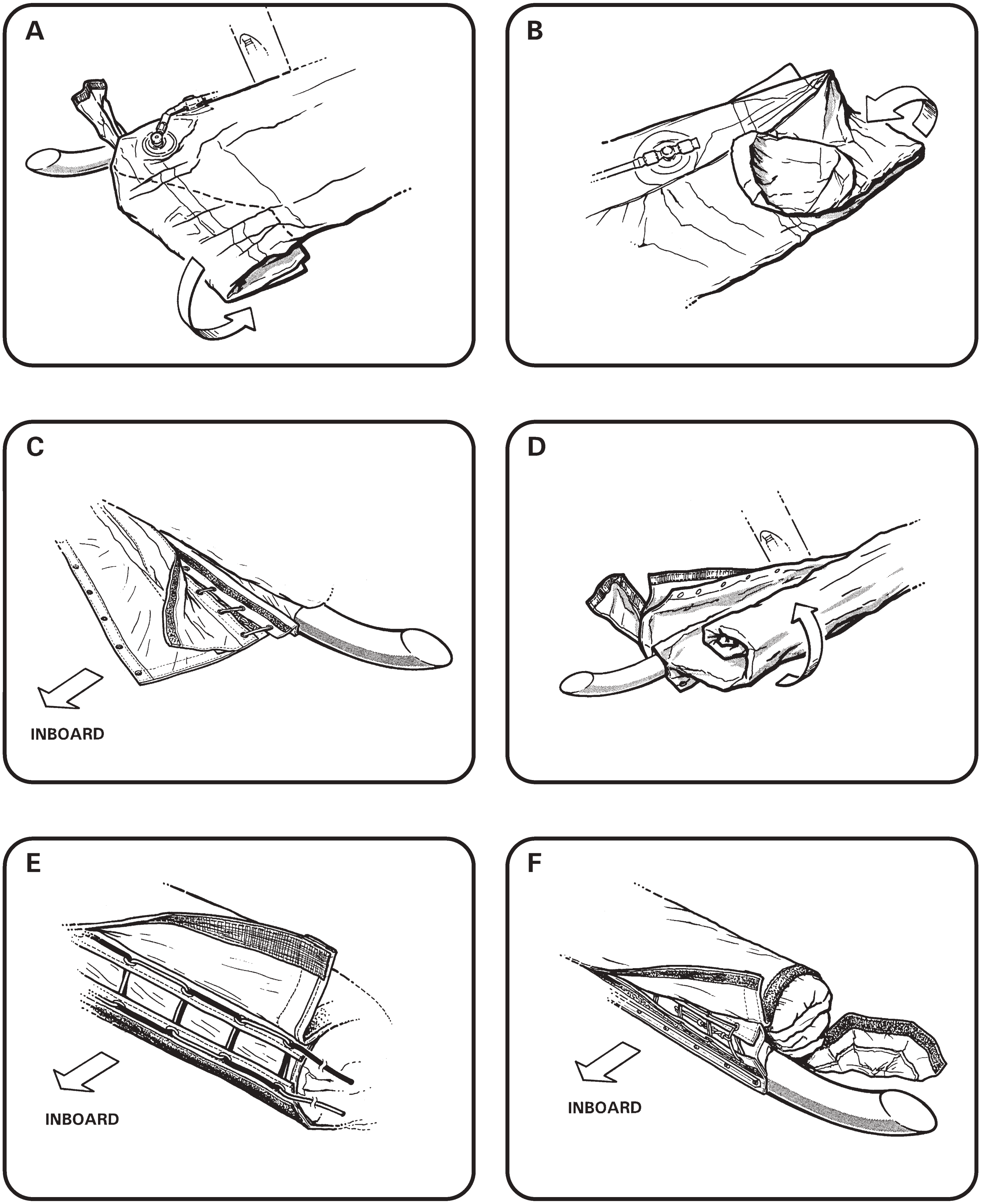

FIGURE 32-8 POP-OUT FLOATS FLOAT PACKING

32-63 Float Installation (continued)

C. Packing

1. Install floats per § 32-63 Part B.
2. With float inflated, verify tees are oriented to minimize preload on hoses. Deflate float. Verify float is properly secured to skid and all hoses are properly connected and covered with heat shrink.
3. Spread deflated float outboard of skid tube. Vacuum as much air as possible from each float chamber through topping valves. Smooth out wrinkles.
4. Lightly dust float and inside float cover with talcum powder.
5. Refer to Figure 32-7 and Figure 32-8 Detail A. At girt forward edges, fold float perpendicular to skid tube; tuck material under and aft of float as shown.
6. Refer to Figure 32-8 Detail B. At girt aft edges, fold float perpendicular to skid tube; lay material over and forward of float as shown.
7. Refer to Figure 32-8 Detail C. Loosen lacing cords securing float cover to inboard girt. Detach, align, and secure inboard hook and loop fasteners.

> NOTE
>
> If possible, roll float into cover with the assistance of six or seven people.

8. Refer to Figure 32-8 Detail D. Align hoses and valve cover flaps. Roll float from outboard edge toward skid tube, as tightly as possible. Hold float on top of skid.
9. Apply A257-7 lubricant to mating surfaces of float cover and (outboard) girt snaps. Button snaps, and secure hook and loop fasteners.
10. Refer to Figure 32-8 Detail E. Verify lacing cords are installed in cover grommets in crossover (“ladder” lacing) method shown. Tighten cords starting at the aft skid extension working forward: at each segment, pull cords tight or until material edges join, but do not overtighten near valves. Tie cord ends in double square knots (4 alternating overhand knots).
11. Refer to Figure 32-8 Detail F. Tuck-in cord ends and secure hook and loop fasteners. Secure hook and loop fasteners at end caps.
12. Verify all fasteners are properly secured. Verify floats are rolled tight, with no lumps or loose areas.

32-64 System Maintenance

A. Leak Check

> **WARNING**
>
> **D679 Cylinder contents are under extreme pressure. Install MT545-1 pin assembly in D757-1 valve assembly during maintenance to prevent cylinder discharge.**

1. Disconnect D674-9 hose assembly from presssure cylinder valve. Install protective cap on cylinder valve fitting. Cover D674-9 hose fitting to prevent contamination, but do not install an air-tight seal (D674-9 hose fitting must be allowed to leak to verify check valve function at each float chamber).
2. Unfasten hook-and-loop fasteners along inboard sections of float cover to expose lacing. Loosen, but do not remove, lacing.
3. Unfasten outboard sections of float cover and unroll float to expose valves.
4. Inflate floats with filtered, oil-free, dry air to 2.0 psig via topping valves.
5. Allow float air temperature to stabilize for 5 minutes minimum then record OAT and pressure in each float chamber.
6. One to two hours after initial pressure check, again record OAT and pressure in each float chamber. Allowable chamber pressure drop from initial measurement is 0.2 psig adjusted for any temperature change. Pressure will change by 0.06 psig per degree C temperature change. For example, float chamber pressure will decrease 0.6 psig if temperature drops 10 degrees C.
7. If leaks are detected, repair float with supplied repair kit and repeat steps 4, 5, & 6.
8. Connect D674-9 hose assembly to cylinder valve and torque per § 20-33.
9. Pack float per § 32-63 Part C.

> NOTE
>
> Annually apply A257-7 dry-film lubricant (see § 20-78) to float cover snap mating surfaces.

32-64 System Maintenance (continued)

B. Inflation Check

WARNING

D679 Cylinder contents are under extreme pressure. Install MT545-1 pin assembly in D757-1 valve assembly during maintenance to prevent cylinder discharge.

1. Unsnap outboard edge of both float covers.
2. Remove locking pin from valve, move inflation lever safety to READY position, and verify area around floats is clear.
3. Squeeze inflation lever to inflate floats. Approximately 20 pounds force will be required due to the shear-rivet. Time for floats to attain full shape without wrinkles should be three seconds or less.

CAUTION

Floats inflate rapidly and with a loud noise. Keep area clear during inflation and inform all nearby personnel. Remove or close all doors prior to inflation. Open doors interfere with float inflation and may be damaged.

4. Allow float temperatures to stabilize for at least five minutes then record OAT and pressure in each float chamber. Minimum allowable pressures are:

OAT (degrees C)	Minimum Pressure (psig) in Forward Two Chambers	Minimum Pressure (psig) in Middle Chamber	Minimum Pressure (psig) in Aft Two Chambers
5-9	1.30	1.00	0.60
10-14	1.60	1.30	0.90
15-19	1.90	1.60	1.20
20-24	2.20	1.90	1.50
25-29	2.50	2.20	1.80
30-34	2.80	2.50	2.10
35-39	3.10	2.80	2.40

32-64 System Maintenance (continued)

B. Inflation Check (continued)

5. Disconnect D674-1 hose assembly from pressure cylinder valve immediately after initial pressure check. Install protective cap on cylinder valve fitting. Cover D674-1 hose fitting to prevent contamination, but do not install an air tight seal (D674-1 hose must be allowed to leak to verify check valve function at each float chamber).
6. Verify no rips or chafing on floats or covers.
7. One to two hours after initial pressure check, again record OAT and pressure in each float chamber. Allowable chamber pressure drop from initial measurement is 0.20 psi adjusted for any temperature change. For example, float chamber pressure will decrease 0.6 psig if temperature drops 10 degrees C.
8. If leaks are detected, repair float with supplied repair kit then perform leak check per Section 32-64 Part A on repaired float chamber.
9. Connect D674-1 hose assembly to valve fitting. Orient line as required to maintain minimum 0.25 inch clearance to cylinder and C390-5 panel. Torque B-nut per Section 20-33 and torque stripe.
10. Pack floats per Section 32-63 Part C.

> NOTE
>
> Annually apply A257-7 dry-film lubricant (see Section 20-78) to float cover snap mating surfaces.

11. Remove cylinder assembly and depressurize cylinder per Section 32-61 Parts A & B. Return cylinder to RHC for overhaul-exchange.
12. Install serviceable cylinder assembly per Section 32-61 Part D.

CHAPTER 33

LIGHTS

Section	Title	Page
33-00	Description	33.1
33-10	Exterior Lights	33.1
33-11	Strobe Light(s)	33.1
33-12	Navigation Lights	33.2
33-13	Landing Lights	33.3
33-20	Interior Lights	33.3
33-21	Panel Light	33.3

Intentionally Blank

CHAPTER 33

LIGHTS

33-00 Description

A red anti-collision light is installed on the tailcone and is controlled by the strobe switch. Position lights are installed on each side of the cabin and in the tail and are controlled by the nav lights switch. A light at the top of the windshield and post lights illuminate the instrument panel. Panel lighting is active when the nav lights switch is on and lighting is dimmed via the knob above the nav lights switch. An overhead map light mounted on a swivel is controlled by an adjacent switch with high and low settings. The map light may be used for emergency lighting of the instrument panel. An additional cabin light with an adjacent switch is located just aft of the map light. The map and cabin lights are not connected to the dimmer circuit.

Two long-life, high intensity discharge (HID) landing lights are installed in the nose. One wide-angle and one narrow-beam light are used to increase lighted area. One landing light switch controls both lights and is located on the cyclic center post.

> NOTE
>
> Continuous operation of landing and position lights in flight is recommended to promote collision avoidance.

An optional flashing light may be mounted on the tailcone in addition to the standard anti-collision light. On earlier aircraft, the optional light is controlled by an additional position on the strobe switch. On later aircraft, the optional light is controlled by a separate switch.

33-10 Exterior Lights

33-11 Strobe Light(s)

A. Removal

1. Turn battery switch off. Pull out STROBE circuit breaker (5 amp, or 7½ amp if forward strobe is installed) at panel.
2. Remove hardware securing A708 strobe light assembly's retainer, lens, and gasket to light assembly.
3. Remove hardware securing light assembly to tailcone mount.
4. Remove hardware securing ground wire, if ground is installed at mount. Disconnect light assembly harness from airframe harness and remove light assembly.

33-11 Strobe Light(s) (continued)

B. Installation

1. Turn battery switch off. Pull out STROBE circuit breaker (5 amp, or 7½ amp if forward strobe is installed) at panel.
2. Install hardware securing A708 strobe light assembly's ground wire to tailcone mount, if ground is installed at mount. Connect light assembly's harness to airframe harness at connectors.
3. Install hardware securing light assembly to tailcone mount (white forward strobe: two missing columns of LEDs facing forward). Verify security.
4. Install hardware securing light assembly's gasket, lens, and retainer to light assembly. Verify security.
5. Push in STROBE circuit breaker (5 amp, or 7½ amp if forward strobe is installed) at panel. Turn battery switch and strobe switch(es) on and verify function. Turn battery switch off.

33-12 Navigation Lights

A. Removal

1. Turn battery switch off. Pull out LTS circuit breaker (5 amp) at panel.
2. a. Position Lights: Remove screw securing retainer, lens, and gasket to light assembly. Remove hardware securing light assembly, gasket, and ground wire to chin. Cut and discard ty-rap securing excess wire to light assembly, pull out light assembly, and disconnect light assembly harness from airframe harness at connector.

   b. Tail Light: Remove screws securing retainer, lens, gasket, and light assembly to C529-1 mount assembly. Pull out light assembly and disconnect light assembly harness from airframe harness at connector.

B. Installation

1. Turn battery switch off. Pull out LTS circuit breaker (5 amp) at panel.
2. a. Position Lights: Connect light assembly harness to airframe harness at connector. Install hardware securing light assembly, gasket, and ground wire to chin. Verify security. Install ty-rap securing excess wire to light assembly. Cinch ty-rap until snug without over-tightening, and trim tip flush with head. Install screw securing retainer, lens, and gasket to light assembly. Verify security.

   b. Tail Light: Connect light assembly harness to airframe harness at connector. Install screws securing retainer, lens, gasket, and light assembly to C529-1 mount assembly. Verify security.
3. Push in LTS circuit breaker (5 amp) at panel. Turn battery switch and LTS switch on and verify function. Turn battery switch and LTS switch off.

33-13 Landing Lights

A. Removal

1. Turn battery switch off. Pull out LAND LT circuit breaker (7½ amp) at panel.
2. Remove screws securing C526-1 retainer to chin and remove retainer.
3. Disconnect landing light cable from lamp and remove lamp.

B. Installation

1. Turn battery switch off. Pull out LAND LT circuit breaker (7½ amp) at panel.

> NOTE
>
> B557-1 (spot) landing light is installed in LH location and B557-2 (flood) taxi light is installed in RH location.

2. Connect landing light cable to landing light.
3. Install screws securing C526-1 retainer to chin.
4. Push in LAND LT circuit breaker (7½ amp) at panel. Turn battery switch and landing light switch on (cyclic center post) and verify function. Turn battery switch and landing light switch off.

33-20 Interior Lights

33-21 Panel Light

A. LED Assembly Replacement

1. Turn battery switch off. Pull out LTS circuit breaker (5 amp) at panel.
2. Remove hardware securing G196 light assembly to windshield stiffener. Remove two cap screws securing cover and LED assembly to housing. Disconnect LED assembly wires from airframe harness and remove LED assembly.
3. Connect F090-2289 (white) airframe harness wire to new LED assembly red wire, and F090-2290 airframe harness wire to LED assembly black wire. Install cover (chamfer facing away from housing) and install two cap screws. Install hardware securing G196 light assembly to windshield stiffener. Verify security.
4. Push in LTS circuit breaker (5 amp) at panel. Turn battery switch and LTS switch on and verify function. Verify dimming knob adjusts brightness. Turn battery switch and LTS switch off.

Intentionally Blank

CHAPTER 52

DOORS AND WINDOWS

Section	Title	Page
52-00	Description	52.1
52-10	Door Assembly	52.1
52-11	Door Lock Replacement	52.4
52-12	Weather Seal (Door Assembly) Replacement	52.4
52-13	Gas Springs	52.7
52-20	Door Vent Replacement	52.7
52-21	Weather Seal (Door Vent) Replacement	52.7
52-22	Door Vent Hinge Replacement	52.8
52-23	Pivot Friction Adjustment	52.8
52-30	Windshield Installation	52.11
52-31	Standard (Acrylic) Windshield Installation	52.11
52-32	Impact-Resistant (Polycarbonate) Windshield Installation	52.14
52-33	Yaw String	52.21

Intentionally Blank

CHAPTER 52

DOORS AND WINDOWS

52-00 Description

The R66 has four passenger doors and one main baggage compartment door. All four cabin doors may be removed and installed by maintenance personnel or pilots.

Passenger doors are constructed of fiberglass and thermoplastics. Passenger doors, locks, weather seal, gas springs, and door vents and hinges may be replaced, and vent pivot friction may be adjusted.

Two windshield halves are retained in aluminum frames and an aluminum tubular bow oriented vertically along the helicopter's centerline. A standard (acrylic) windshield installation and an impact-resistant (polycarbonate) windshield installation are available. Refer to § 52-30 for detailed description.

52-10 Door Assembly

A. Cleaning

Refer to § 20-10 Part B for cleaning windows.

B. Removal

1. Refer to Figures 52-1 and 52-2. To disconnect door from gas spring mechanism:
   a. Forward Doors: Pull D573-4 rod up and off of arm assembly ball joint.
   b. Aft Doors: Insert flat-tip screwdriver and pry up spring clip locking C394-1 gas spring to channel ball joint. Pull gas spring up and off of ball joint.
2. Remove rings from door hinge pins, lift pins up from door frame hinge assemblies, and remove door.
3. Adjust weight and balance per R66 Pilot's Operating Handbook Section 6.

C. Installation

WARNING

Failure to install a ring in each door's two hinge pins may allow door to depart aircraft in flight.

1. Refer to Figures 52-1 and 52-2. Align and insert door hinge pins in door frame hinge assemblies.
2. Align forward door D573-4 rod with arm assembly ball joint, or aft door C394-1 gas spring with channel ball joint, and push down to lock.
3. Install rings in door hinge pins.
4. Adjust weight and balance per R66 Pilot's Operating Handbook Section 6.

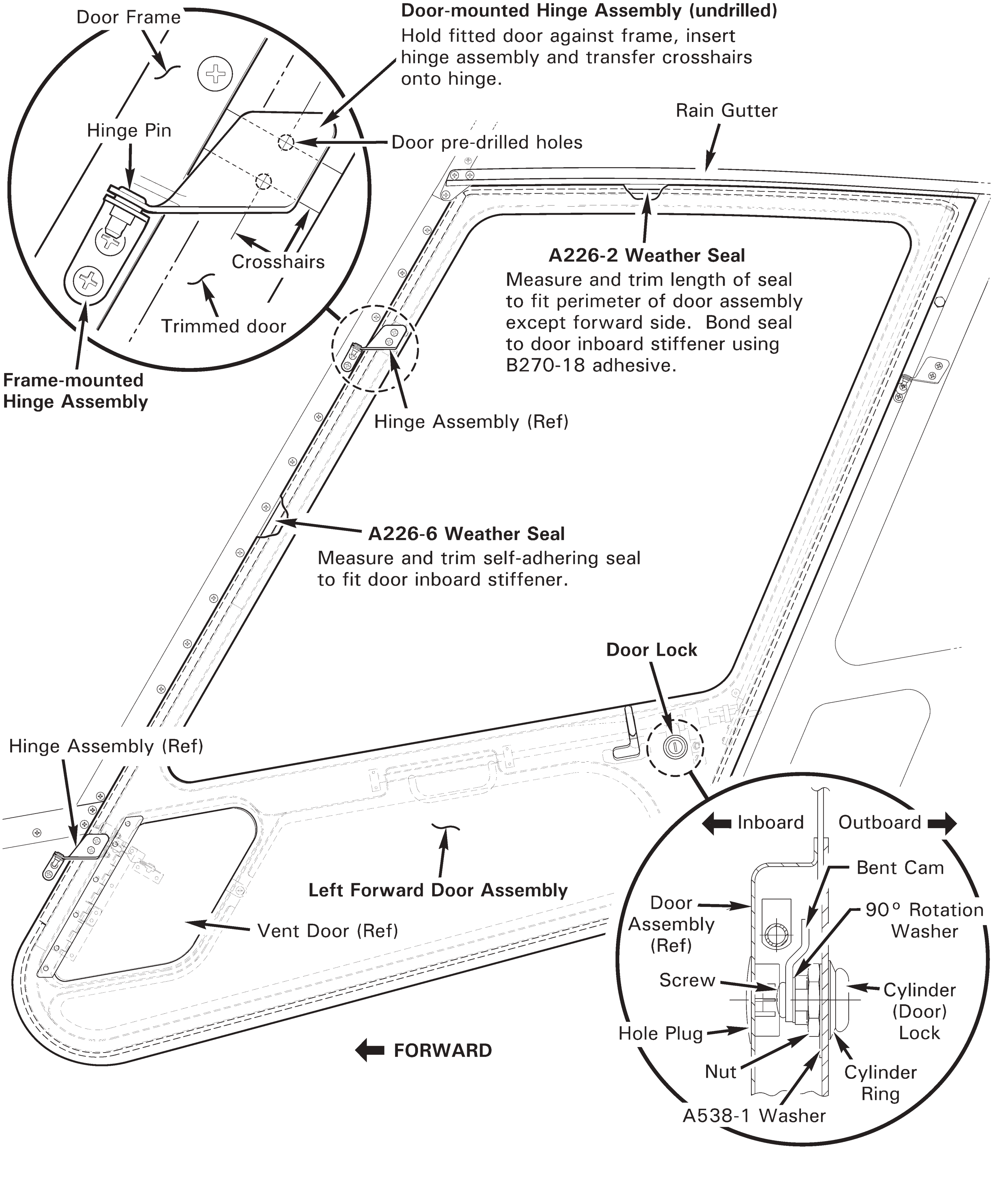

FIGURE 52-1 DOOR ASSEMBLY

52-10 Door Assembly (continued)

D. Replacement

CAUTION

Use proper respiratory protection when handling fiberglass.

CAUTION

Protect door windows and paint from scratches or scuff marks when door maintenance is performed on workbench.

1. Refer to Figure 52-1. As required, lay masking tape on surfaces of door frame, new door hinges, and new door, to mark with soft pencil.
2. Press new door forward and top edge weather seals against door frame recess (rain gutter interferes with top edge until trimmed).
3. Using soft pencil, trace door forward edge onto masked frame, then transfer approximate edge distance to door. From inside cabin, estimate approximate material to be removed from door top edge, then transfer approximate edge distance to door. Remove door.
4. Using 60-grit grinder, trim forward and top door edges. Perform steps 1 thru 3 until weather seals sit approximately even against door frame recess.
5. Using soft pencil and a straight edge, draw cross hairs through (centers of) door upper hinge assembly pre-drilled holes. Hold fitted door against frame, insert new (door-mounted) hinge assembly in frame-mounted hinge assembly, and transfer cross hairs onto hinge. Remove hinge and door.
6. Drill two 0.170-inch diameter holes at cross hair intersections in hinge assembly and deburr. Remove tape, clean up debris, and prepare hinge assembly and door clamping surfaces using approved solvents per § 20-70.
7. Install upper hinge assembly on door and special torque screws per § 20-33.
8. Repeat steps 5 thru 7 for lower door-mounted hinge assembly.
9. Install door. Using 60-grit grinder, trim edges as required for final fitting. Verify doors open and close smoothly and latch correctly. Remove door and bevel edges using 60-grit sandpaper.
10. Prepare surfaces with solvent and touch-up door using approved materials per § 20-70. Install new door per § 52-10.

52-11 Door Lock Replacement

CAUTION

Protect door windows and paint from scratches or scuff marks when door maintenance is performed on workbench.

1. Remove door per § 52-10.
2. Refer to Figure 52-1. Remove hole plug opposite key slot on door interior.
3. Remove screw, bent cam, and 90° rotation washer. Remove nut and A538-1 washer. Press and catch cylinder lock and ring through door.
4. Install new cylinder lock and ring in door. Install lock so key is vertical with teeth down in locked position. Apply thin coat B270-10 adhesive on screw threads, install hardware, and tighten screw.
5. Bond hole plug in place using B270-9 adhesive.

52-12 Weather Seal (Door Assembly) Replacement

1. Remove damaged weather seal using plastic wedge or putty knife. Remove hardened adhesive using approved solvent per § 20-70, or 60-grit sandpaper, as required.
2. Refer to Figure 52-1. Measure and trim continuous length of A226-2 seal to fit perimeter of door except forward side, as shown. Neatly bond seal to stiffener using B270-18 adhesive. Wipe away excess adhesive prior to curing.
3. Measure and trim length of A226-6 seal to fit forward side of door. Remove self-adhesive preserving strip and neatly bond seal to stiffener.

Intentionally Blank

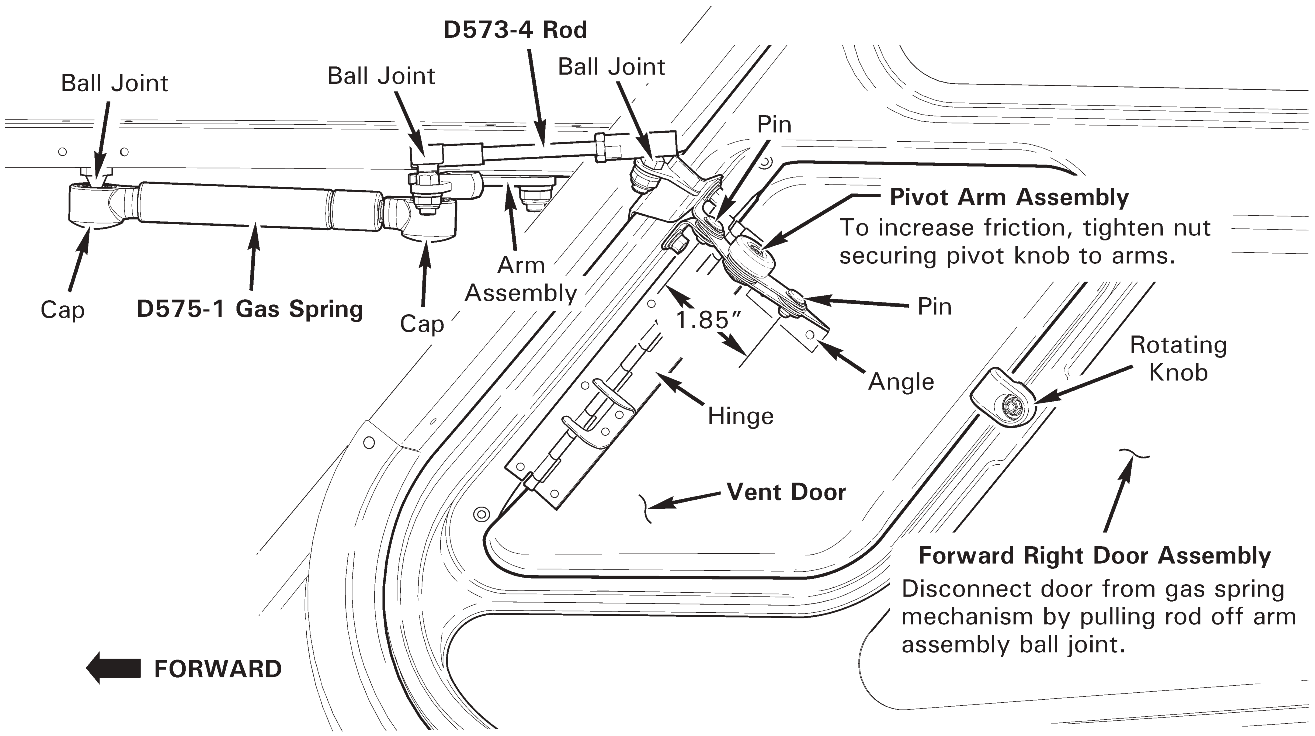

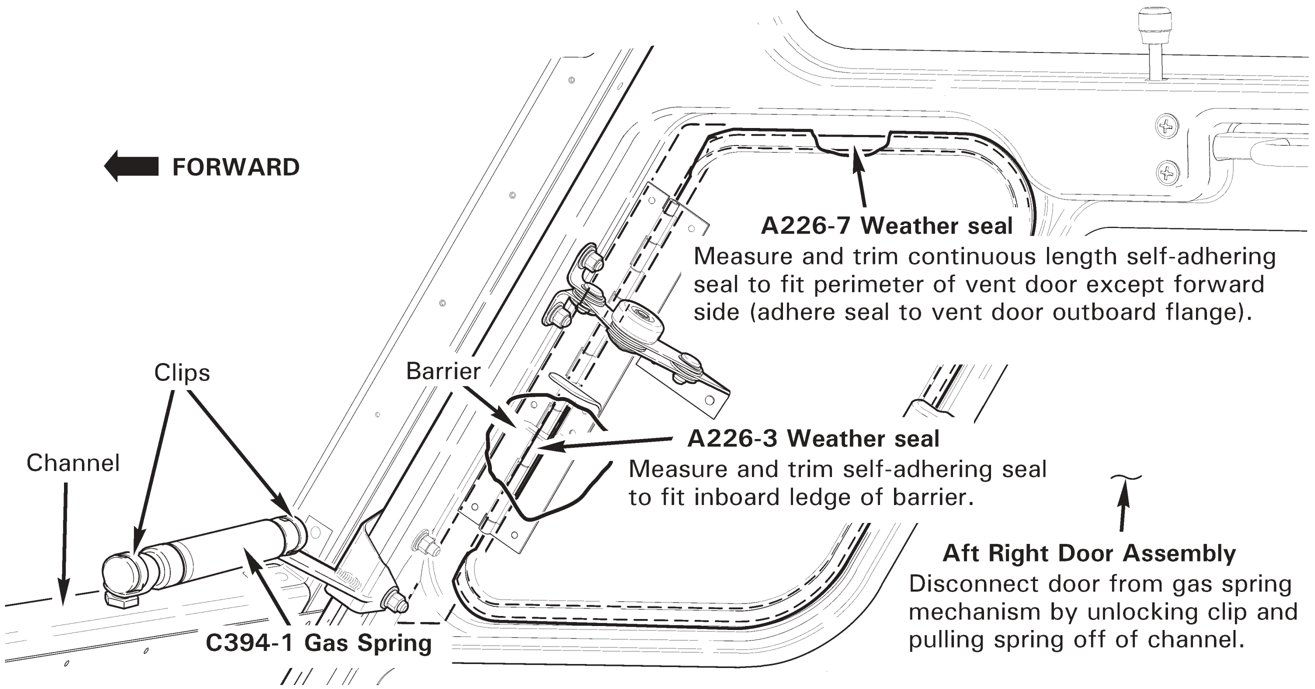

FIGURE 52-2 GAS SPRINGS AND DOOR VENTS

52-13 Gas Springs

Refer to R66 Illustrated Parts Catalog (IPC) Figures 52-5 and 52-11.

A. Removal

1. a. Forward Doors: Insert flat-tip screwdriver and pry down on caps to unlock D575-1 gas spring from ball joints. Push gas spring down and off of ball joints.

   b. Aft Doors: Insert flat-tip screwdriver and pry up spring clips to unlock C394-1 gas spring from ball joints. Pull gas spring up and off of ball joints.

B. Installation

1. a. Forward Doors: Unlock D575-1 gas spring caps. Snap gas spring onto ball joints and lock caps.

   b. Aft Doors: Insert flat-tip screwdriver and pry up C394-1 gas spring spring clips. Snap gas spring onto ball joints and release clips.

52-20 Door Vent Replacement

Refer to R66 Illustrated Parts Catalog (IPC) Figures 52-1 and 52-7.

CAUTION

Use proper respiratory protection when handling fiberglass.

1. Refer to Figure 52-2. Drill out rivets securing hinge and pivot arm assembly angle to door vent. Rotate knob to unlock and remove door vent.

2. Using 60-grit grinder, trim new vent door forward edge as required to match door recess and smooth corners. Bevel edges using 60-grit sandpaper.

3. Hold fitted door vent in recess and match drill hinge four 0.098-inch diameter holes. Smooth hole edges; clean up debris. Prepare surfaces for clamping using approved solvents per Section 20-70. Install rivets securing door to hinge.

4. Extend pivot arm to approximately 1.85 inch between center of pins. Match drill pivot arm assembly angle two 0.098-inch diameter holes. Smooth hole edges; clean up debris. Prepare surfaces for clamping using approved solvents per Section 20-70. Install rivets securing door to arm assembly angle. Verify vent door opens and closes smoothly and latches correctly.

52-21 Weather Seal (Door Vent) Replacement

Refer to R66 Illustrated Parts Catalog (IPC) Figures 52-1 and 52-7.

1. Remove damaged weather seal using plastic wedge or putty knife. Remove hardened adhesive using approved solvent per Section 20-70, or 60-grit sandpaper, as required.

2. Refer to Figure 52-2. Measure and trim continuous length of A226-7 seal to fit perimeter of vent door except forward side, as shown. Remove self-adhesive preserving strip and neatly bond seal to stiffener.

3. Measure and trim length of A226-3 seal to fit ledge of barrier. Remove self-adhesive preserving strip and neatly bond seal to stiffener.

52-22 Door Vent Hinge Replacement

Refer to R66 Illustrated Parts Catalog (IPC) Figures 52-1 and 52-7.

CAUTION

Protect door windows and paint from scratches or scuff marks when door maintenance performed on workbench.

1. Remove door per Section 52-10.
2. Refer to Figure 52-2. Drill out rivets securing hinge to door assembly and door vent. Remove hinge.
3. Smooth hole edges; clean up debris. Prepare surfaces for clamping using approved solvents per Section 20-70.
4. Refer to Section 52-20. Verify proper vent door fit; install rivets securing hinge to door assembly and door vent. Prepare surfaces and touch-up rivet heads and hinge using approved materials per Section 20-70.

52-23 Pivot Friction Adjustment

To increase pivot arm assembly friction, tighten nut securing pivot knob to arms. Do not overtighten screw. No thread exposure required beyond nut.

Intentionally Blank

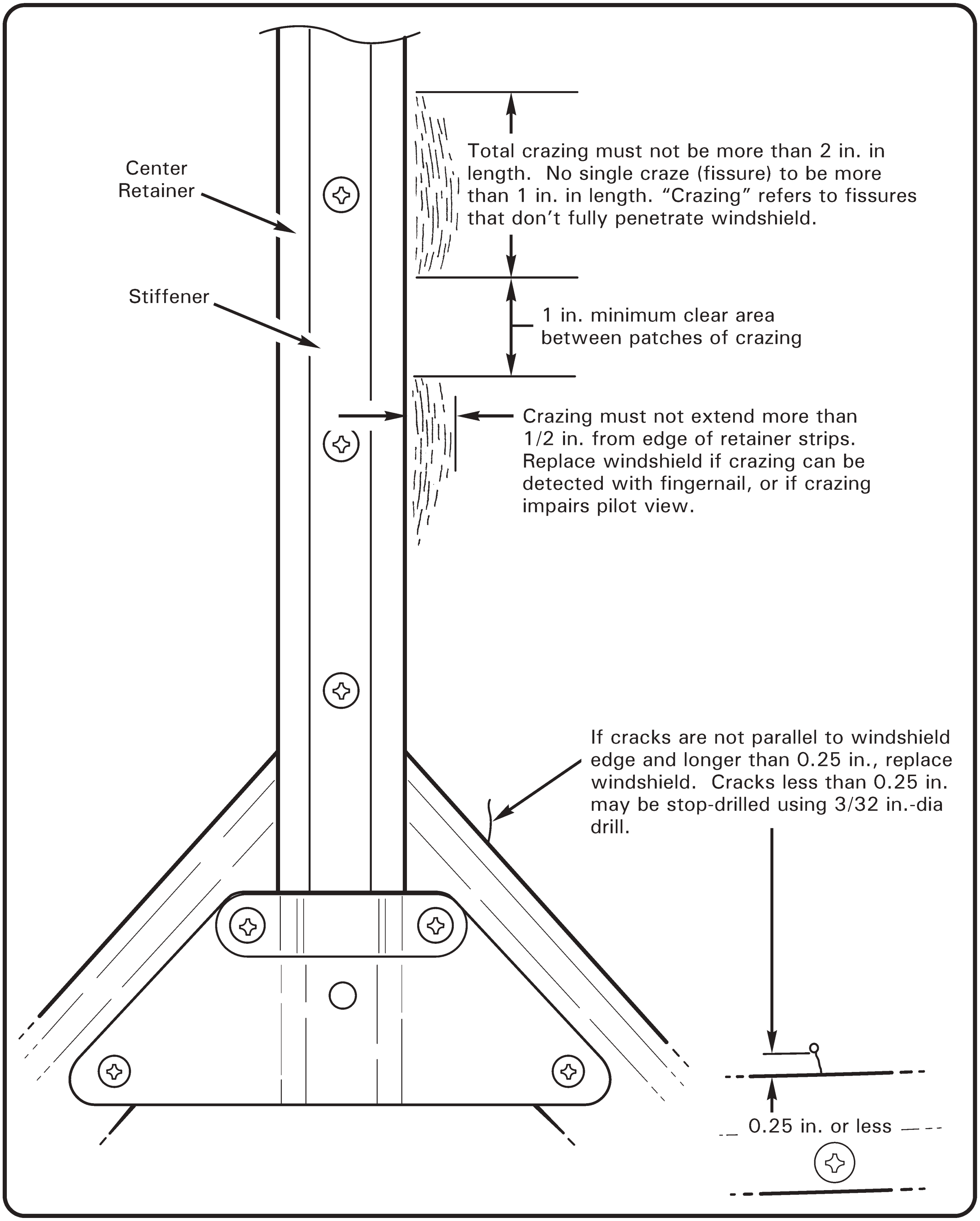

FIGURE 52-3 WINDSHIELD INSPECTION (ACRYLIC WINDSHIELD SHOWN)

52-30 Windshield Installation

52-31 Standard (Acrylic) Windshield Installation

A. Description

Acrylic windshields are sandwiched between thin aluminum retainers that are screwed to the door and windshield frames. An adhesive/sealant is applied between the retainers and the windshields for security and weatherproofing.

B. Cleaning

Refer to § 20-10 Part B for cleaning windshield.

C. Inspection

Inspect both windshields for cracks and crazing adjacent to retainers per Figure 52-3. If cracks exceed these limits, replace damaged windshield per § 52-31 Part F.

Minor defects or imperfections that do not impair pilot visibility or indicate impending structural failure are acceptable.

D. Removal

1. Remove forward door assembly per § 52-10 Part B. Remove hardware securing C228-4 (upper) hinge assembly to door frame and remove hinge.

> NOTE
>
> If windshield is to be reinstalled, prior to removal, tape protective paper or film to the inside and outside of the windshield to prevent damage.

2. Remove hardware securing C238-27 or C238-28 (side) retainer to door frame and remove retainer.
3. Install upper hinge assembly, and install door assemblies for cabin structure support with windshield removed.
4. Support windshield. With a second person inside cabin to remove nuts, latch forward doors. Remove hardware securing F238-4 (upper) retainer, B409-5 gusset, D805-2 restraint, C366-5 bracket, C366-8 retainer, F367 (lower) retainers, B295-1 clip with yaw string, F367-12 stiffener, and F367-10 (center) retainer to cabin and remove parts. Remove windshield.
5. Remove sealant from cabin and parts.
6. If windshield is to be reinstalled, remove sealant from windshield.
7. Repeat steps to remove opposite-side windshield, as required.

52-31 Standard (Acrylic) Windshield Installation (continued)

E. Installation

NOTE

Prior to installation, if not previously accomplished, tape protective paper or film to the inside and outside of the windshield to prevent damage.

1. Verify sealant has been removed from cabin, parts, and windshield.
2. Position windshield on helicopter and cleco retainers to frames.
3. Attach 1/2″-wide masking tape to windshield along edge of retainers to catch sealant squeeze-out during retainer installation.
4. Remove C238-27 or C238-28 (side) retainer and install C228-4 (upper) door hinge assembly. Install forward door assemblies for cabin structure support during windshield installation.
5. Remove F367-10 (center) retainer. Run a bead of B270-26 sealant along entire edge of tape line. Install hardware securing center retainer and F367-12 stiffener (do not install B295-1 clip) to cabin; special torque screws per § 20-33. Remove tape and wipe off excess sealant with cheesecloth wet with lacolene.
6. Remove F367 (lower) retainers. Run a bead of B270-26 sealant along entire edge of tape line. With a second person inside cabin to tighten nuts, latch forward doors. Install hardware securing lower retainers, C366-8 retainer, and C366-5 bracket to cabin. Remove tape and wipe off excess sealant with cheesecloth wet with lacolene.
7. Remove F238-4 (upper) retainer. Run a bead of B270-26 sealant along entire edge of tape line. With a second person inside cabin to tighten nuts, latch forward doors. Install hardware securing upper retainer and B409-5 gusset to cabin. Remove tape and wipe off excess sealant with cheesecloth wet with lacolene.
8. Remove door and hinge assembly. Run a bead of B270-26 sealant along entire edge of tape line. Install hardware securing side retainer and D805-2 restraint to cabin. Remove tape and wipe off excess sealant with cheesecloth wet with lacolene.
9. Reinstall hinge assembly, and install door assembly per § 52-10 Part C.
10. Ensure all fasteners are tight. Wipe off excess sealant with cheesecloth wet with lacolene.
11. Allow sealant to dry according to manufacturer’s instruction.
12. Remove protective paper or film from inside and outside of the windshield.
13. Repeat steps to install opposite-side windshield, as required.
14. Install B295-1 clip and yaw string per § 52-33 Part B.

52-31 Standard (Acrylic) Windshield Installation (continued)

F. Replacement

NOTE

Prior to installation, if not previously accomplished, tape protective paper or film to the inside and outside of the windshield to prevent damage.

1. Verify sealant has been removed from cabin and parts.
2. Cleco retainers to frames, checking for proper alignment. Remove retainers, except C238-27 or C238-28 (side) retainer.
3. Install C228-4 (upper) door hinge assembly, and install forward door assemblies for cabin structure support during windshield installation.
4. Lay out masking tape on frames to identify location for windshield edge (estimate edge where side retainer is clecoed to frame). Hold oversized windshield in place by hand and verify it overlaps masking tape on all frames and retainer. When satisfied with alignment, lay out masking tape on windshield for trimming.

WARNING

Review appropriate Safety Data Sheet (SDS) when working in proximity to hazardous materials. Specific recommendations for use of personal protective equipment are located in the SDS.

5. A band saw with a blade containing at least 24 teeth per inch is recommended for initial trimming. Tape cardboard to band saw table to prevent scratching of windshield. Trim windshield carefully to prevent binding of saw blade and cracking windshield. Finish initial cut using an orbital sander, as required.
6. Hold windshield in place and check for fit. Re-trim as necessary.
7. After windshield is fitted, use sanding block with 100-grit paper to smooth edges. Finish edge and bevel corners using a triangular machinist’s scraping tool. Verify all edges are clean and free of notches.
8. Remove trimming debris from windshield and cabin.
9. Install windshield per § 52-31 Part E.

52-32 Impact-Resistant (Polycarbonate) Windshield Installation

A. Description

The polycarbonate windshield installation is similar to the acrylic windshield installation, but the windshields fasten to the door and windshield frames via small stainless steel straps. If a wire strike provisions kit is installed, a different stainless steel strap configuration secures the polycarbonate windshields to a strengthened bow.

While polycarbonate has superior strength and flexibility properties when compared with acrylic, it is also more susceptible to ultraviolet (UV) degradation, and has a low scratch resistance. A hardcoat is applied during manufacturing to protect against UV damage and scratching, however, further effort must be made by the operator to to maximize windshield service life. Follow instructions closely to avoid scratching windshield during cleaning (refer to § 20-10 Part B). Exposure to incompatible cleaning agents or solvents can result in embrittlement or crazing. Use a cabin cover when parking helicopter outdoors, or store helicopter in hanger when possible.

B. Cleaning

Refer to § 20-10 Part B for cleaning windshield.

C. Inspection

Inspect both windshields for cracks and crazing adjacent to retainers per Figure 52-3. Also inspect areas adjacent to fasteners and stainless steel straps for cracks and crazing. If cracks exceed these limits, replace damaged windshield per § 52-31 Part F.

Inspect windshields for any significant discoloration or cloudiness. Minor defects or imperfections that do not impair pilot visibility or indicate impending structural failure are acceptable.

D. Removal

1. Perform § 52-31 Part D steps 1 thru 3.
2. Support windshield. With a second person inside cabin to remove nuts and washers, latch forward doors. Remove hardware securing G367 ties and straps to windshield near center bow (all other hardware installed in windshield may remain in place during windshield removal). Taking care not to bend ties and straps, remove sealant as required, and remove ties & straps from windshield.
3. Remove hardware securing F238-4 (upper) retainer, B409-5 gusset, D805-2 restraint, C366-5 bracket, C366-8 retainer, F367 (lower) retainers, B295-2 clip and yaw string, F367-12 stiffener (or G933-2 bow assembly), and F367-10 retainer (or G935-2 retainer) to cabin and remove parts. Taking care not to bend ties and straps, remove windshield.
4. Remove sealant from cabin and parts.
5. If windshield is to be reinstalled, remove sealant from windshield but leave hardware and G367 ties, straps, pads, and tabs installed. If replacing windshield, remove hardware and G367 ties, straps, pads, and tabs, as required.
6. Repeat steps to remove opposite-side windshield, as required.

52-32 Impact-Resistant (Polycarbonate) Windshield Installation (continued)

E. Installation

NOTE

Prior to installation, if not previously accomplished, tape protective paper or film to the inside and outside of the windshield to prevent damage.

NOTE

Inspect condition of G367 ties, straps, pads, and tabs to be installed. Verify no obvious damage, deformation, or stretching. If windshield is being replaced due to bird strike or other impact which could deform ties, straps, pads, or tabs, replacement of these items is recommended.

NOTE

Refer to R66 Illustrated Parts Catalog Chapter 52. Note location of G367 ties, straps, pads, and tabs on work table or by marking on tape at fasteners to facilitate installation.

1. Verify sealant has been removed from cabin, parts, and windshield.
2. Position windshield on helicopter and cleco G367 ties, straps, tabs, and retainers to frames. Also, cleco G367 ties, straps, and tabs to windshield at center bow, if drilled.
3. Install C228-4 (upper) door hinge assembly. Install forward door assemblies for cabin structure support during windshield installation.
4. If windshield is drilled and has hardware, G367 ties, straps, pads, and tabs installed:
   a. With a second person inside cabin to tighten nuts, latch forward doors. Remove clecoes and install hardware securing G367 ties and straps to windshield at center bow; special torque screws per § 20-33.
   b. Attach 1/2″-wide masking tape to windshield along edge of retainers to catch sealant squeeze-out during retainer installation.
   c. Remove F367-10 (center) retainer (or G935-2 retainer). Run a bead of B270-26 sealant along entire edge of tape line. Install hardware securing center retainer, F367-12 stiffener (or G933-2 bow assembly) to cabin (do not install B295-2 clip); special torque screws per § 20-33. Remove tape and wipe off excess sealant with cheesecloth wet with lacolene.
   d. Perform § 52-31 Part E steps 6 thru 13.
   e. Paint (or touch up) windshield trim per § 52-32 Part G.
   f. Install B295-2 clip and yaw string or G935-7 plate per § 52-33 Part B.

52-32 Impact-Resistant (Polycarbonate) Windshield Installation (continued)

E. Installation (continued)

5. Align G367 ties and straps perpendicular to retainers within 2°. Install F367-12 stiffener (or G933-2 bow assembly) and special torque screws per § 20-33. Match drill #40 pilot holes through windshield and install clecos.

6. At center bow:

   a. Remove F367-12 stiffener (or G933-2 bow assembly) and F367-10 (center) retainer (or G935-2 retainer). Remove G367 ties and straps and expand pilot holes to 0.169–0.175 inch diameter holes thru windshield. Finish holes with reamer; deburr back side of holes using plastic razor. Clean up debris.

   b. Apply B270-26 sealant to G367 tabs and pads and position on windshield. Run a bead of B270-26 sealant along entire edge of windshield. Install hardware securing center retainer, F367-12 stiffener (or G933-2 bow assembly) to cabin (do not install B295-2 clip); special torque screws per § 20-33.

   c. With a second person inside cabin to tighten nuts, latch forward doors and install hardware securing G367 ties and straps to windshield; special torque screws per § 20-33. Wipe off excess sealant with cheesecloth wet with lacolene.

7. At lower retainers:

   a. Remove F367 (lower) retainers. Remove G367 straps and expand pilot holes to 0.169–0.175 inch diameter holes thru windshield. Finish holes with reamer; deburr back side of holes using plastic razor. Clean up debris.

   b. Apply B270-26 sealant to G367-12 tabs and position on windshield. Run a bead of B270-26 sealant along entire edge of windshield. With a second person inside cabin to tighten nuts, latch forward doors, and install hardware securing lower retainers, C366-8 retainer, and C366-5 bracket to cabin. Install hardware securing G367 straps to windshield; special torque screws per § 20-33. Wipe off excess sealant with cheesecloth wet with lacolene.

8. At upper retainer:

   a. Remove F238-4 (upper) retainer. Remove G367 straps and expand pilot holes to 0.169–0.175 inch diameter holes thru windshield. Finish holes with reamer; deburr back side of holes using plastic razor. Clean up debris.

   b. Run a bead of B270-26 sealant along entire edge of windshield. With a second person inside cabin to tighten nuts, latch forward doors, and install hardware securing upper retainer and B409-5 gusset to cabin. Install hardware securing G367 straps and ties to windshield; special torque screws per § 20-33. Wipe off excess sealant with cheesecloth wet with lacolene.

52-32 Impact-Resistant (Polycarbonate) Windshield Installation (continued)

E. Installation (continued)

9. At door frame:

    a. Remove door and hinge assembly. Remove G367 straps and expand pilot holes to 0.169–0.175 inch diameter holes thru windshield. Finish holes with reamer; deburr back side of holes using plastic razor. Clean up debris.

    b. Run a bead of B270-26 sealant along entire edge of windshield. Install hardware securing side retainer and D805-2 restraint to cabin. Install hardware securing G367 straps and ties to windshield; special torque screws per § 20-33. Wipe off excess sealant with cheesecloth wet with lacolene.

10. Reinstall hinge assembly, and install door assembly per § 52-10 Part C.

11. Ensure all fasteners are tight. Wipe off excess sealant with cheesecloth wet with lacolene.

12. Allow sealant to dry according to manufacturer's instruction.

13. Repeat steps to install opposite-side windshield, as required.

14. Paint (or touch up) windshield trim per § 52-32 Part G.

15. Install B295-2 clip and yaw string or G935-7 plate per § 52-33 Part B.

F. Replacement

NOTE

Do not use this procedure to upgrade acrylic to polycarbonate windshields.

1. Perform § 52-31 Part F steps 1 thru 4.

WARNING

Review appropriate Safety Data Sheet (SDS) when working in proximity to hazardous materials. Specific recommendations for use of personal protective equipment are located in the SDS.

2. A band saw with 20°–30° clearance angle, 0–5° rake angle, 600–1000 m/min rotation speed, and 1.5–4 mm tooth spacing is recommended for initial trimming. Tape cardboard to band saw table to prevent scratching of windshield. Trim windshield carefully to prevent binding of saw blade and cracking windshield. Finish initial cut using an orbital sander, as required.

3. Hold windshield in place and check for fit. Re-trim as necessary.

4. After windshield is fitted, use sanding block with 100-grit paper to smooth edges. Verify all edges are clean and free of notches.

5. Remove trimming debris from windshield and cabin.

6. Install windshield per § 52-32 Part E.

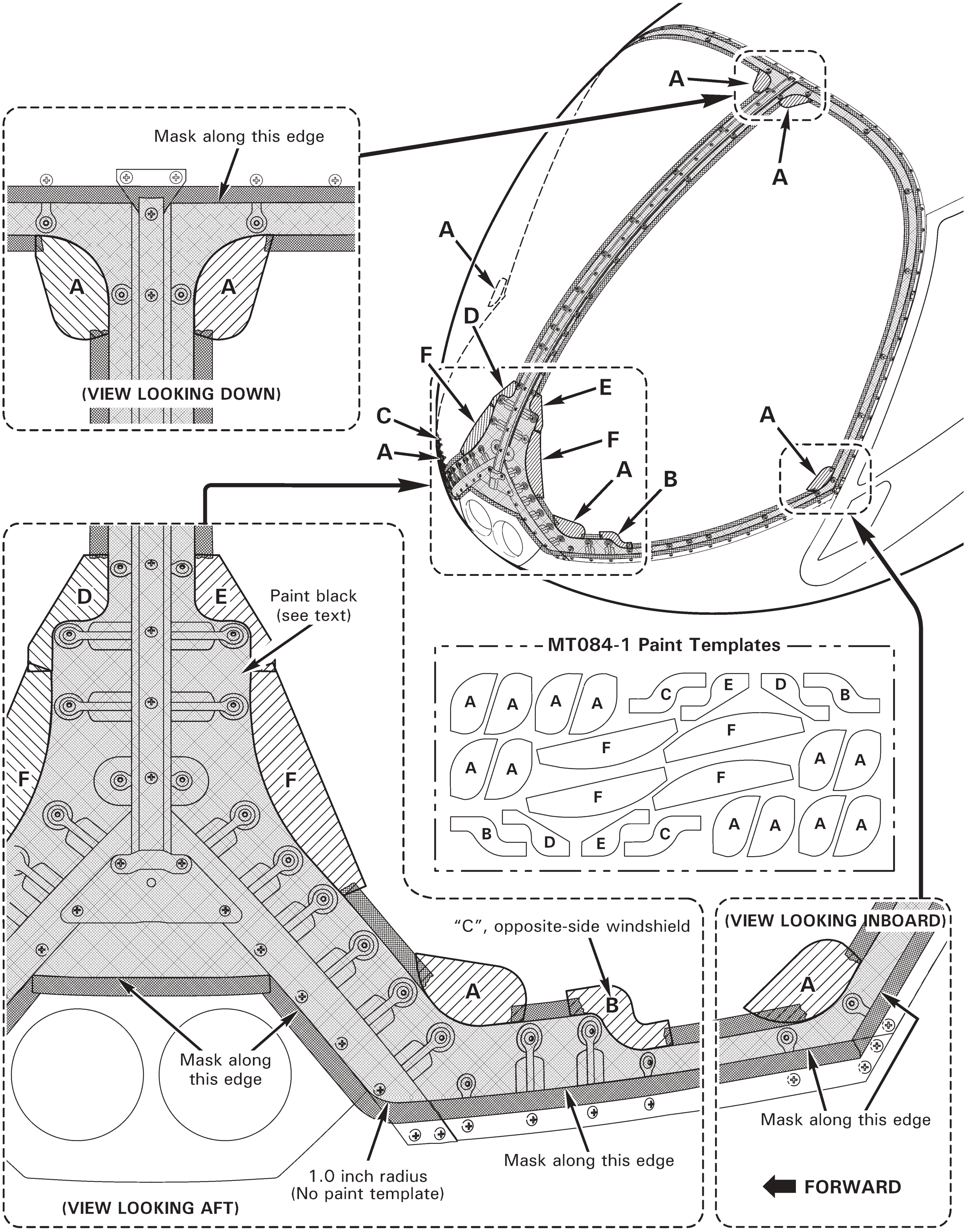

FIGURE 52-4 PAINT TEMPLATE LAYOUT

52-32 Impact-Resistant (Polycarbonate) Windshield Installation (continued)

G. Trim Paint

1. Remove B295-2 clip and yaw string from bow assembly and reinstall screw. If G935-7 plate is installed, remove per § 52-33 Part A.
2. Trim any excess sealant around perimeter of windshield using plastic razor blades; remove sealant residue using cheesecloth wet with lacolene.
3. Clean surface of windshield to be masked for paint using cheesecloth wet with lacolene.

> NOTE
>
> Cleaning surface of windshield prior to masking will prevent paint from "bleeding," or seeping, under tape.

4. Refer to Figures 52-4 and 52-5. Using 3M vinyl tape (or equivalent), apply masking ("Tape 1" and "Tape 2") to windshield as shown. Apply MT084-1 paint templates on windshield as shown.
5. Refer to Figure 52-4. Using 3M vinyl tape (or equivalent), apply masking to windshield retainer edges, area near landing lights, and between MT084-1 paint templates as shown.
6. Protect windshield and cabin from paint overspray.
7. Using 320-grit sandpaper and scotch-brite, lightly scuff surfaces to be painted. Avoid damaging masking edges; replace any damaged masking per steps 4 and 5 as required.
8. Remove debris using compressed air.
9. Clean scuffed surfaces to be painted using a lint-free cloth wet with Final Klean 3909S.
10. Conversion coat bare aluminum per § 20-51, as applicable.
11. Refer to § 20-77. Apply black paint to windshield trim prepared surfaces per Figure 52-4.
12. Allow paint to cure. Remove MT084-1 paint templates and masking. Clean windshield per § 20-10 Part B.
13. Install B295-2 clip and yaw string or G935-7 plate per § 52-33 Part B.

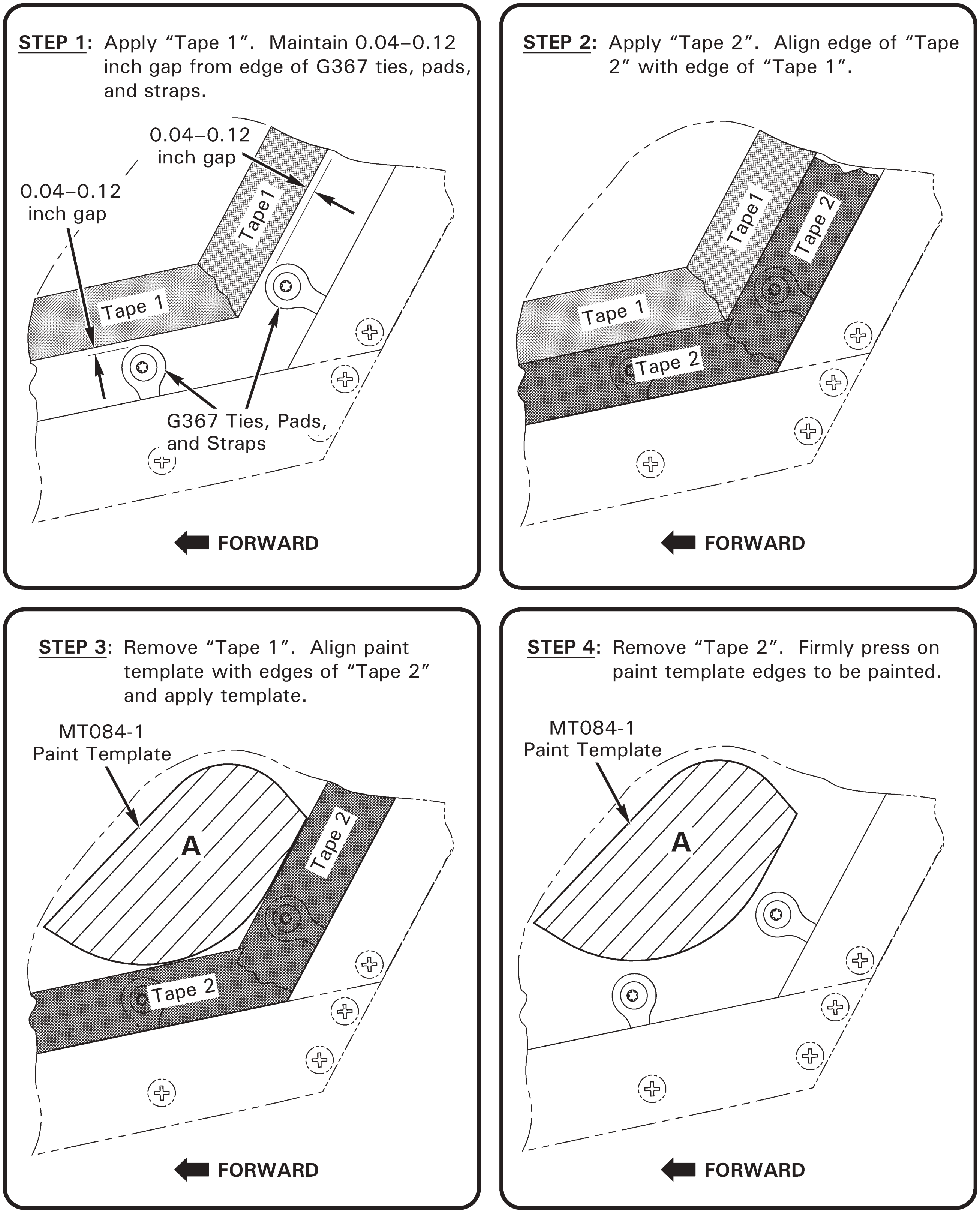

FIGURE 52-5 PAINT TEMPLATE LAYOUT PROCESS

52-33 Yaw String

A. Removal

1. Remove screw securing B295-1 or B295-2 clip; remove clip and yaw string.
2. If G935-7 plate is installed, drill out rivets securing plate. Remove plate and retain (4) NAS620-5 washers.

B. Installation

B295-1 and B295-2 Clip

1. Locate 10th screw up from bottom of F367-12 stiffener and remove screw.
2. Position yaw string on stiffener just above hole location; install screw securing B295 clip, finger tight. Verify 3 inches string, each side of clip; special torque screw to 16 in.-lb. Cut replacement string to 3 inches from clip, if applicable.

G935-7 Plate (Optional Wire Strike Only)

1. Refer to Figure 52-6. Locate (2) 0.128-inch diameter holes adjacent to 11th screw up from bottom of G933-2 bow assembly.
2. Assemble B204-2 rivets, G935-7 plate, and NAS620-5 washers, and position on bow; install rivets.
3. As required, install yaw string(s) on G935-7 plate to dimension shown; install hardware and standard torque per § 20-32. Trim string(s) as required.

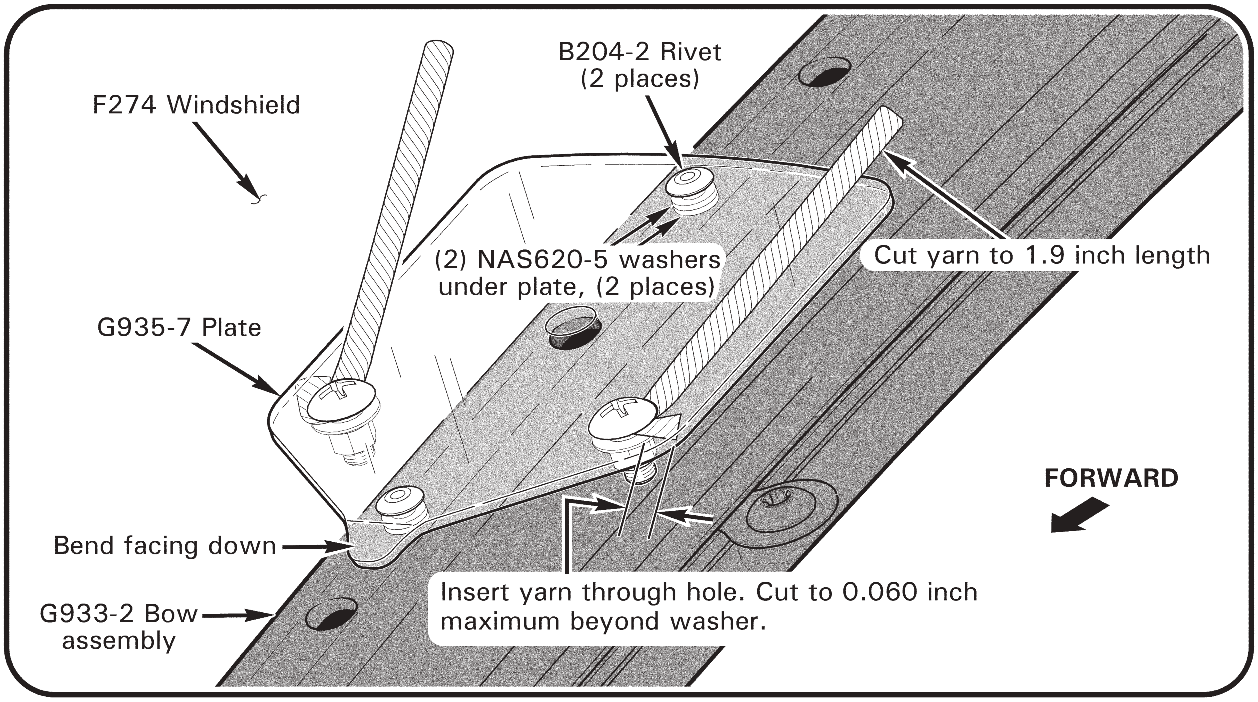

FIGURE 52-6 G935-7 PLATE INSTALLATION

Intentionally Blank

CHAPTER 53

FUSELAGE

Section *Title* *Page*

53-00 Description 53.1
53-10 Cabin Assembly 53.1
53-11 Repair 53.1
53-20 Fairings, Cowlings, and Panels 53.3
53-21 Engine Cowling 53.3
53-22 Mast Fairing 53.3
53-23 Tailcone Cowling 53.4
53-24 Access and Inspection Panels 53.4
53-30 Frame Assemblies 53.5
53-31 Lower Frames 53.5
53-32 Hydraulic Servo Support Frame 53.9
53-33 Upper Frame 53.10
53-40 Tailcone Assembly 53.13
53-41 Inspection and Repair 53.15
53-50 Tail Rotor Guard Assembly 53.16
53-60 F050-2 Horizontal Stabilizer Assembly 53.19
53-70 Empennage Assembly 53.21
53-71 Upper Vertical Stabilizer Assembly 53.23
53-72 Lower Vertical Stabilizer Assembly 53.24
53-73 F044-1 Vertical Stabilizer's Mount Assembly 53.25
53-74 C044-1 or -2 Horizontal Stabilizer 53.26
53-80 C050-2 or G950-2 Horizontal Stabilizer 53.29
53-90 Tail Skid 53.29

Intentionally Blank

CHAPTER 53

FUSELAGE

53-00 Description

The R66 is a five-place, single main rotor, single engine helicopter constructed primarily of metal and equipped with skid type landing gear.

The primary fuselage structure is welded steel tubing and riveted aluminum sheet. The tailcone is a monocoque structure in which aluminum skins carry most primary loads. Fiberglass and thermoplastics are used in secondary cabin structure and in various ducts and fairings.

Several cowl doors provide access to the drive system, engine, engine oil tank, fuel filler cap, and fuel sump drain. A right-side door provides access to the main baggage compartment. Removable panels and cowlings allow additional access to controls and other components for maintenance.

The instrument console hinges up and aft for instrument and avionics access. The battery is installed behind an access panel under the left front seat, or in the main baggage compartment, depending on aircraft configuration.

The engine is located aft of the main baggage compartment. The engine compartment is isolated from the rest of the airframe by stainless steel firewalls in front of and above the engine.

53-10 Cabin Assembly

The cabin assembly is a non-field-replaceable assembly.

53-11 Repair

1. Vertical firewall replacement must be performed at the factory in a jig. Firewall repairs may be accomplished in accordance with U.S. FAA Advisory Circular 43.13-1B Section 4-59. Firewall material is 0.016 inch, type 301, one-quarter hard corrosion-resistant (CRES) steel.

2. Keel panel replacement must be performed at the factory in a jig. Keel panel repairs may be accomplished in accordance with U.S. FAA Advisory Circular 43.13-1B Sections 4-58 and 4-59. Keel panel material is 0.025 inch, 2024-T3 clad aluminum sheet.

3. To preserve crashworthiness, seat assembly maintenance is limited to replacement only.

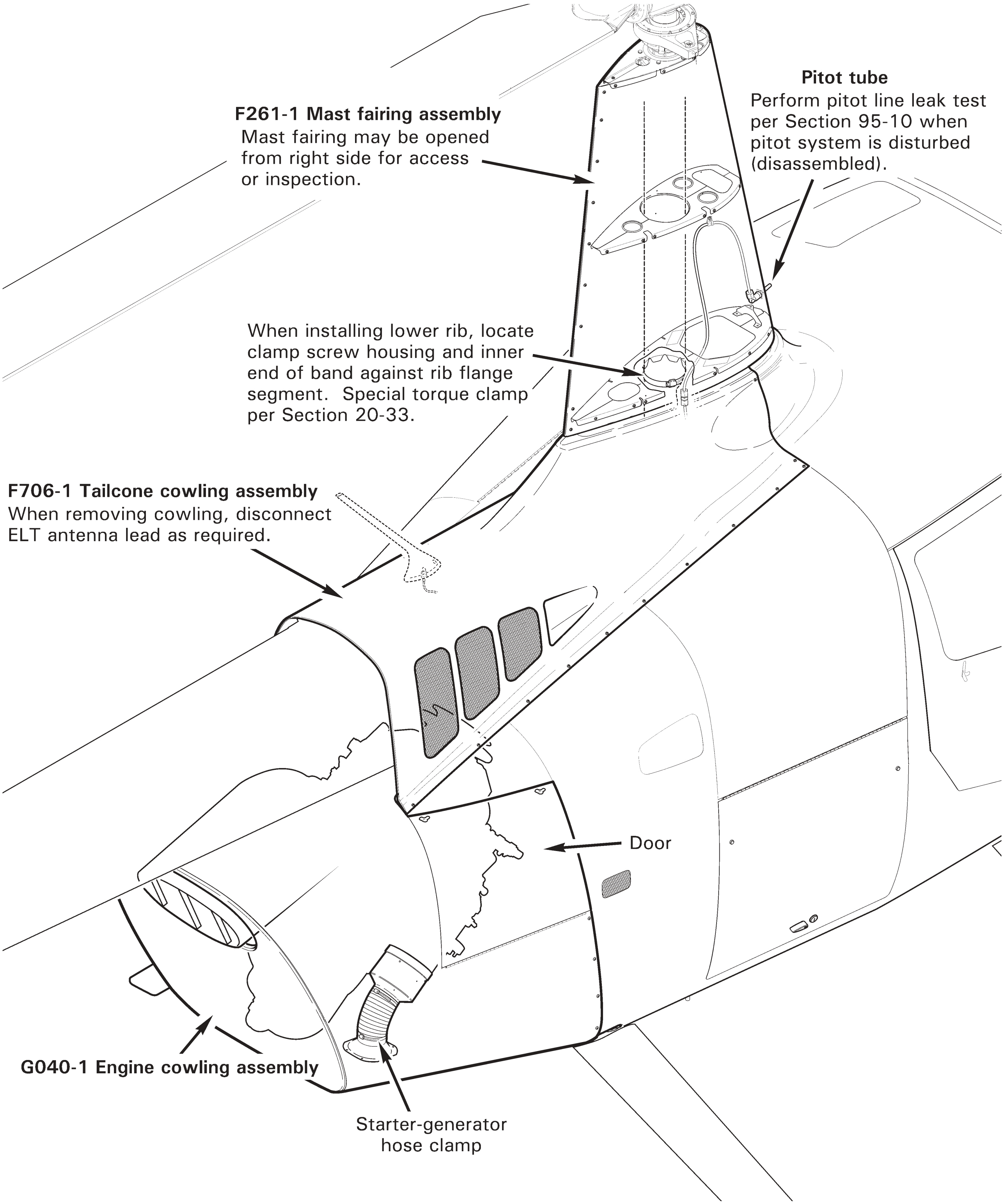

FIGURE 53-1 FAIRING, COWLINGS, AND PANELS

53-20 Fairing, Cowlings, and Panels

CAUTION

Mast fairing, cowlings, and panels must be installed for flight.

53-21 Engine Cowling

A. Removal

1. Refer to Figure 53-1. Open G040-1 engine cowling assembly right and left doors.
2. Loosen clamp securing starter-generator hose to air inlet. Slide hose off of inlet.
3. Remove screws securing cowling to fuselage, unfasten cowling doors, and remove cowling.

B. Installation

1. Refer to Figure 53-1. Position G040-1 engine cowling assembly on helicopter, fasten cowling doors, and install screws securing cowling to fuselage.
2. Slide starter-generator hose onto air inlet and tighten clamp. Close right and left doors.
3. Ensure G039 ring is centered on exhaust weldment within 0.1 inch. Remove and reinstall/replace ring as required.

53-22 Mast Fairing

A. Opening and Closing

1. Refer to Figure 53-1. Remove right-side screws securing F261-1 mast fairing assembly at aft, vertical seam.
2. Remove right-side screws securing fairing to ribs. Keep fairing from springing open and minimize strain on nutplates by holding fairing closed until all right-side screws are removed. Slowly open fairing.
3. Hold fairing closed. Install right-side screws securing fairing to ribs, and screws securing fairing at aft, vertical seam.

B. Removal

1. Open mast fairing assembly per § 53-22 Part A.
2. Disconnect (pitot system) 15-4-N-O union near G201-1 (servo support) frame assembly. Cap fitting and plug line.
3. Remove remaining screws securing fairing to ribs and remove fairing.

53-22 Mast Fairing (continued)

C. Installation

1. Refer to Figure 53-1. Install left-side screws securing F261-1 mast fairing assembly to ribs.
2. Remove cap and plug and connect (pitot system) 15-4-N-O union near G201-1 (servo support) frame assembly.
3. Hold fairing closed. Install right-side screws securing fairing to ribs, and screws securing fairing at aft, vertical seam.
4. Perform pitot line leak test per § 95-10.

53-23 Tailcone Cowling

A. Removal and Installation

1. Refer to Figure 53-1. Thru left access door, disconnect ELT antenna lead from antenna mounted to F706-1 tailcone cowling assembly, as required.
2. Remove screws securing cowling to fuselage and remove cowling.
3. Reinstall cowling and install screws securing cowling to fuselage.
4. Connect ELT antenna lead to cowling thru left access door, as required.

53-24 Access and Inspection Panels

Refer to § 6-70 for access and inspection panel location and illustration.

53-30 Frame Assemblies

> NOTE
>
> See § 54-40 for F237-1 tailcone attachment frame weldment replacement.

> **WARNING**
>
> **R66 welded steel tube frames are stress relieved. Field weld repairs are not allowed; send frames to RHC for repair.**

53-31 Lower Frames

A. Removal

1. Remove engine per § 71-10.
2. Refer to Figure 53-2.
    a. F046-1 (LH) only: Remove hardware securing power turbine governor control cable clamps, F723-3 line assembly clamp, and firewall clamp to F046-1 lower frame.
    b. F046-2 (RH) only: Remove hardware securing battery cable harness clamp, external power block, and firewall clamp to F046-2 lower frame.
3. Remove hardware securing clamps to firewall securing F049-03 harness assembly, as required. Cut and discard ty-raps as required, mark wires, and disconnect wires at plastic connectors to liberate frame.
4. Using plastic scraper, remove sealant around frame weldment(s) at firewalls.
5. Support tailcone (until frames are reinstalled).
    a. F046-1 (LH) only: Remove hardware securing frame to F574-5 block (access bolt thru G246-1 brace, inside baggage compartment). Remove hardware securing shackle and frame to F574-8 block (threaded).
    b. F046-2 (RH) only: Remove hardware securing frame to F574-1 support assembly (access bolts from inside baggage compartment).
6. Remove hardware securing F174-1 support weldment rod end(s) to F046 lower frame(s).
7. Remove two bolts and associate hardware securing F020-1 frame weldment, firewall, and F046 lower frame.
8. Remove hardware securing F046 lower frame to F574-10 block assembly (threaded). Remove lower frame.

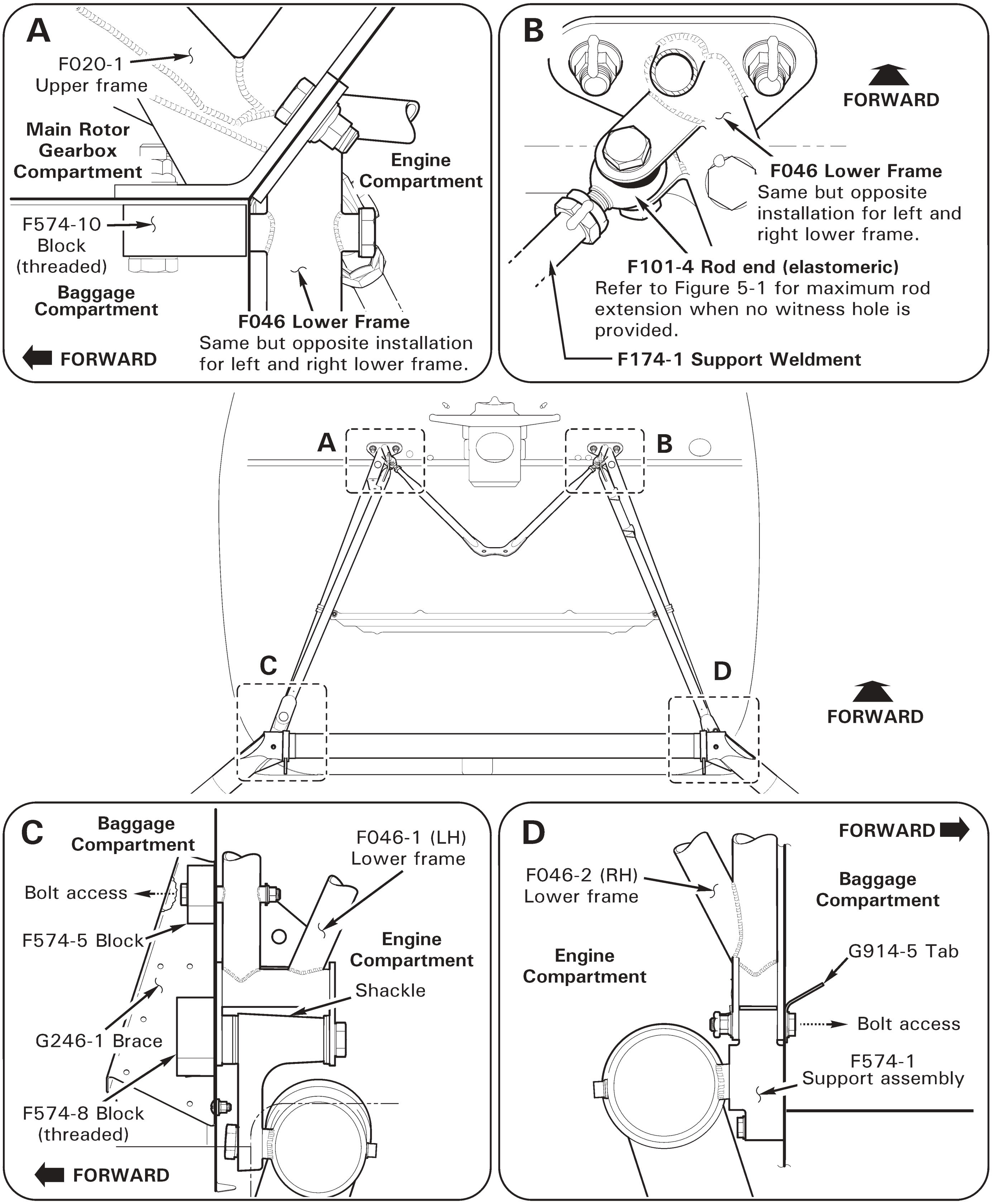

FIGURE 53-2 LOWER FRAMES

53-31 Lower Frames (continued)

B. Installation

1. Refer to Figure 53-2.

   a. F046-1 (LH) only: Install hardware securing shackle and frame to F574-8 block (threaded). Special torque bolt per § 20-33, and torque stripe per Figure 5-1. Install hardware securing frame to F574-5 block (insert bolt thru G246-1 brace, inside baggage compartment). Standard torque bolt per § 20-32, and torque stripe per Figure 5-1.

   b. F046-2 (RH) only: Install hardware, and G914-5 tab, securing frame to F574-1 support assembly (access bolts from inside baggage compartment). Remove finish from surface under braided wire terminal, if installed. Standard torque bolts per § 20-32, and torque stripe per Figure 5-1.

2. Install hardware securing F046 lower frame to F574-10 block assembly (threaded). Install hardware securing F020-1 frame weldment, firewall, and F046 lower frame. Standard torque bolts per § 20-32, and torque stripe per Figure 5-1.

3. Verify rod end engagement in F174-1 support weldment is approximately symmetrical with minimal preload. Adjust rod end extension on both sides as required per § 5-33, and Figures 5-1 & 5-2; ensure rod extension is no more than 1.10 inches. Install hardware securing weldment to lower frames, standard torque bolts per § 20-32, and torque stripe per Figure 5-1. Remove tailcone support.

4. Seal around frame weldment(s) at firewalls using B270-1 sealant.

5. Connect F049-03 harness assembly wires at plastic connectors, install hardware securing clamps to firewall, and install ty-raps as required. Cinch ty-raps until snug without over-tightening, and trim tips flush with heads.

6. a. F046-1 (LH) only: Install hardware securing power turbine governor control cable clamps, F723-3 line assembly clamp, and firewall clamp to F046-1 lower frame. Standard torque hardware per § 20-32, and torque stripe per Figure 5-1.

   b. F046-2 (RH) only: Install hardware securing battery cable harness clamp, external power block, and stiffener clamp to F046-2 lower frame. Standard torque hardware per § 20-32, and torque stripe per Figure 5-1.

7. Install engine per § 71-10.

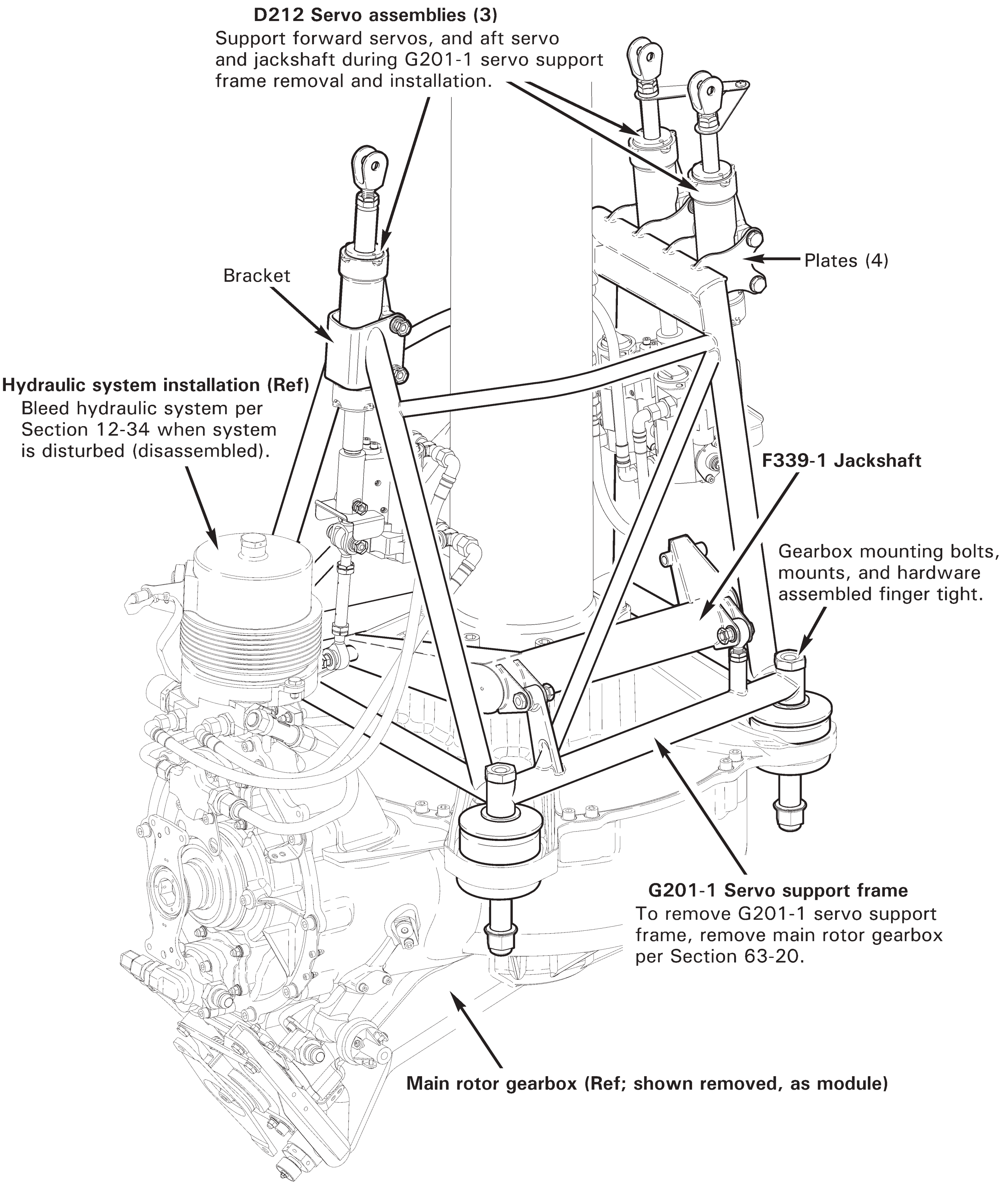

FIGURE 53-3 HYDRAULIC SERVO SUPPORT FRAME

53-32 Hydraulic Servo Support Frame

Refer to R66 Illustrated Parts Catalog (IPC) Figure 67-19.

A. Removal

1. Remove main rotor gearbox per Section 63-20.
2. Remove main rotor hub per Section 62-20.
3. Remove mast fairing per Section 53-22.
4. Remove swashplate assembly per Section 67-40.
5. Refer to Figure 53-3. Tag F121-3 push-pull tube assemblies with corresponding D212 servo assembly, and tag servos with location on G201-1 servo support frame. Remove hardware securing push-pull tubes to servos.
6. Remove hardware securing F339-1 jackshaft weldment to frame.
7. Remove hardware securing servos to frame forward plates and aft bracket. Support forward servos, and aft servo and jackshaft, during hardware removal.
8. Remove gearbox mounting bolts, mounts, and hardware. Lift frame off of gearbox, over mast assembly.

B. Installation

1. Refer to Figure 53-3. Lower G201-1 servo support frame over mast assembly, onto main rotor gearbox. Install gearbox mounting bolts, mounts, and hardware. Install nuts finger tight.
2. Remove tags and install hardware securing D212 servo assemblies to frame forward plates and aft bracket. Standard torque bolts per Section 20-32, and torque stripe per Figure 5-1.
3. Install hardware securing F339-1 jackshaft weldment to frame. Standard torque bolts per Section 20-32, and torque stripe per Figure 5-1.
4. Install F121-3 push-pull tube assemblies as removed. Standard torque bolts per Section 20-32, and torque stripe per Figure 5-1.
5. Install swashplate assembly per Section 67-40.
6. Install mast fairing per Section 53-22.
7. Install main rotor hub per Section 62-20.
8. Install main rotor gearbox per Section 63-20.

53-33 Upper Frame

Refer to R66 Illustrated Parts Catalog (IPC) Figure 53-11 and 53-11B.

A. Removal

1. Remove main rotor blades per Section 62-10.
2. Remove tailcone assembly per Section 53-40.
3. Remove tail rotor drive shaft weldment per Section 65-10.
4. Remove hardware securing F236-1 scroll assembly to F306-1 box assembly. Remove hardware securing box to firewall.
5. Remove hardware securing F252-1 strut to F020-1 upper frame and remove strut.
6. Remove air filter and cage assembly per Section 71-22. Disconnect air bypass switch assembly wiring at connector and remove hardware securing G258-4 strap to fuel bladder support assembly.
7. Remove engine shaft weldment per Section 63-10.
8. Remove engine per Section 71-10.
9. Remove main rotor gearbox per Section 63-20, steps 2 thru 12.
10. Cut and discard ty-raps securing wires and antenna cables to frame, as required.
11. Disconnect D205-19 hose assembly and F724-1 line assembly from F823-1 thermostat assembly. Plug hose and line and cap fittings. Remove hardware securing F651-1 oil filter assembly to frame.
12. Remove hardware securing F231-8 braces to fuel bladder support, and to frame.
13. Remove hardware securing rotor brake cable assembly to frame. Remove hardware securing B157-1 (pulley) mount to frame.
14. Remove ELT transmitter per Section 25-61, if installed. Remove hardware securing clamps to upper frame and remove clamps.
15. Remove palnut, nut, and spacer securing F316-1 bellcrank assembly to upper frame, and slide C494-2 shaft inboard until it clears frame. Remove fastener securing A331-4 bellcrank assembly to upper frame and swing bellcrank clear of frame.
16. Remove fasteners securing upper frame to horizontal firewall.
17. Using plastic scraper, remove sealant around frame weldment edges at firewalls, cabin bulkhead, and fuel bladder support.
18. Remove mounting hardware securing upper frame to firewalls, bulkhead, and support and remove frame.

53-33 Upper Frame (continued)

B. Installation

1. Position F020-1 upper frame inside helicopter. Install mounting hardware securing upper frame to firewalls, cabin bulkhead, and fuel bladder support assembly. Standard torque bolts per § 20-32, and torque stripe per Figure 5-1. Seal around frame weldment edges at firewalls, bulkhead, and support using B270-1 sealant.

2. Install fasteners securing upper frame to horizontal firewall. Standard torque hardware per § 20-32, and torque stripe per Figure 5-1.

3. Install hardware securing A331-4 bellcrank assembly to upper frame. Standard torque bolt per § 20-32, and torque stripe per Figure 5-1. Slide C494-2 shaft outboard thru F316-1 bellcrank assembly and upper frame and install spacer, nut, and palnut. Special torque nut per § 20-33, and torque stripe per Figure 5-1.

4. Install ELT transmitter per § 25-61, if installed. Install clamps and hardware securing clamps to upper frame.

5. Install B157-1 (pulley) mount and hardware securing mount to frame. Install hardware securing rotor brake cable assembly to frame.

6. Install F231-8 braces and hardware securing braces to fuel bladder support, and to frame.

7. Install hardware securing F651-1 oil filter assembly to frame. Standard torque hardware per § 20-32, and torque stripe per Figure 5-1. Remove caps and plugs and connect D205-19 hose assembly and F724-1 line assembly to F823-1 thermostat assembly. Standard torque hose assembly nuts per § 20-32, special torque line assembly nuts per § 20-33, & torque stripe per Figure 5-1.

8. Install MS3367-4-9 or -5-9 ty-raps as required to secure wire harness & cables to frame. Cinch ty-raps until snug without over-tightening, & trim tips flush with heads.

9. Install main rotor gearbox per § 63-20, but do not install F252-1 strut until step 13.

10. Install engine per § 71-10.

11. Install engine shaft weldment per § 63-10.

12. Install air filter and cage assembly per § 71-22. Install hardware securing G258-4 strap to fuel bladder support and connect air bypass switch assembly wiring at connector.

13. Install hardware securing F252-1 strut to F020-1 upper frame. Standard torque bolts per § 20-32, and torque stripe per Figure 5-1.

14. Install F306-1 box assembly and hardware securing box to firewall. Install F236-1 scroll assembly and hardware securing scroll to box.

15. Install tail rotor drive shaft weldment per § 65-10.

16. Install tailcone assembly per § 53-40.

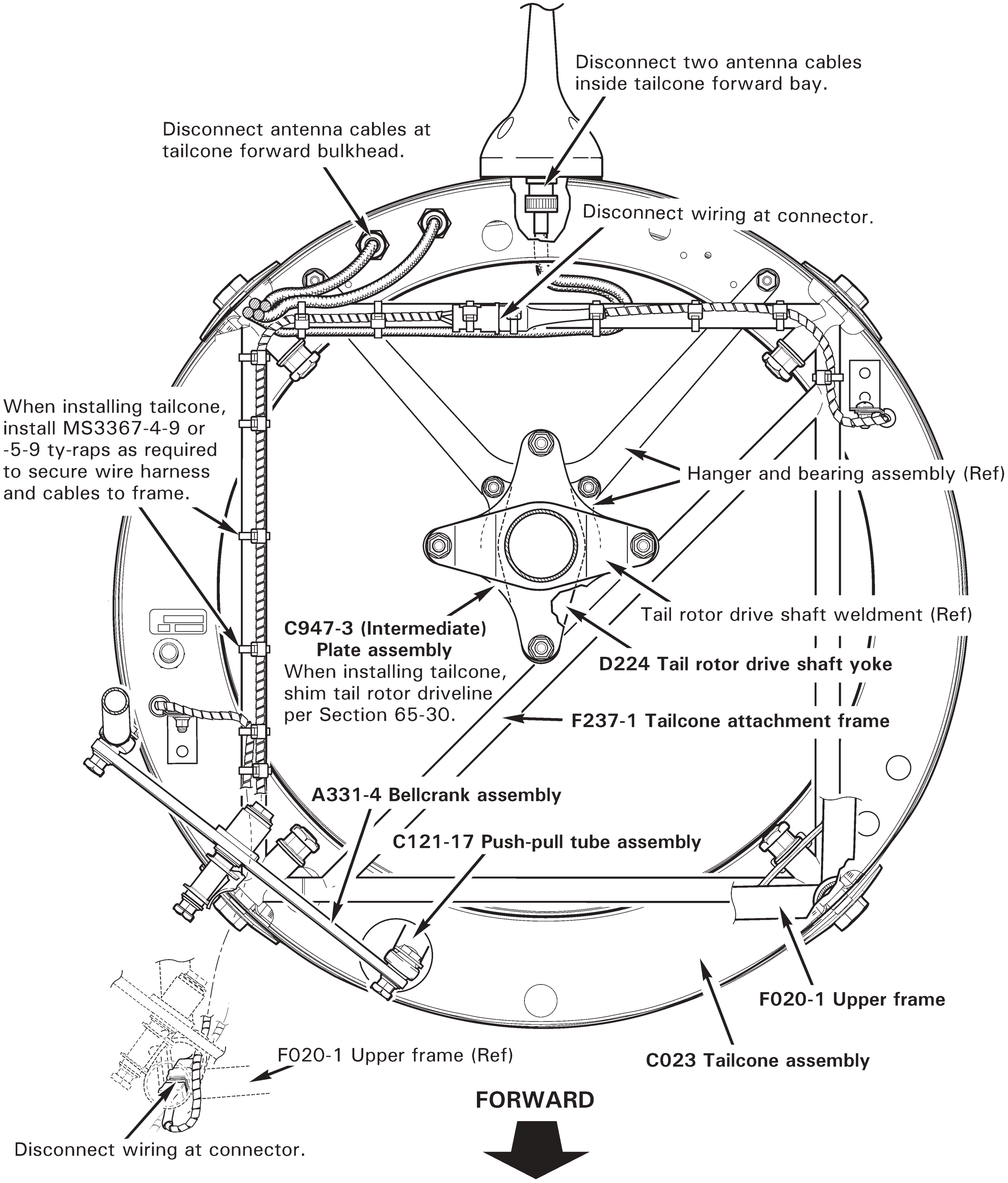

FIGURE 53-4 TAILCONE ASSEMBLY

53-40 Tailcone Assembly

CAUTION

If tailcone has an F955-1 bracket then F050-2 horizontal stabilizer must be installed.

C044-1 or -2 horizontal stabilizer may not be installed on a tailcone that has an F955-1 bracket.

F044-1 vertical stabilizers mount assembly may only be installed on a tailcone that has an F955-1 bracket.

As applicable, C050-2 or G950-2 stabilizer must always be installed.

A. Removal

1. Remove tailcone cowling assembly per § 53-23. Remove engine cowling assembly per § 53-21.
2. Refer to Figure 53-4. Cut and discard ty-raps as required and disconnect tailcone wiring at connectors. Disconnect two antenna cables inside tailcone forward bay, and cables at forward bulkhead, as required.
3. Remove hardware securing D224 tail rotor drive shaft yoke to C947-3 (intermediate) plate assembly, noting hardware removed.
4. Remove hardware securing C121-17 push-pull tube to A331-4 bellcrank assembly.
5. Remove hardware securing C023 tailcone assembly to frames and remove tailcone.
6. Cut and discard ty-raps as required and remove F237-1 tailcone attachment frame, as required.

B. Installation

1. Refer to Figure 53-4. Install F237-1 tailcone attachment frame, if not previously accomplished. Verify correct damper assembly orientation per Figure 65-3.
2. Position C023 tailcone assembly on F020-1 upper frame assembly; do not pinch wiring between tailcone bulkhead and frames. Install hardware securing tailcone to frames, standard torque bolts per § 20-32, and torque stripe per Figure 5-1.
3. Install hardware securing D224 tail rotor drive shaft yoke to C947-3 (intermediate) plate assembly. Shim tail rotor driveline per § 65-30. Standard torque bolts per § 20-32, and torque stripe per Figure 5-1.
4. Install hardware securing C121-17 push-pull tube to A331-4 bellcrank assembly. Standard torque bolt per § 20-32, and torque stripe per Figure 5-1.
5. Perform tail rotor drive shaft runout per § 65-21.

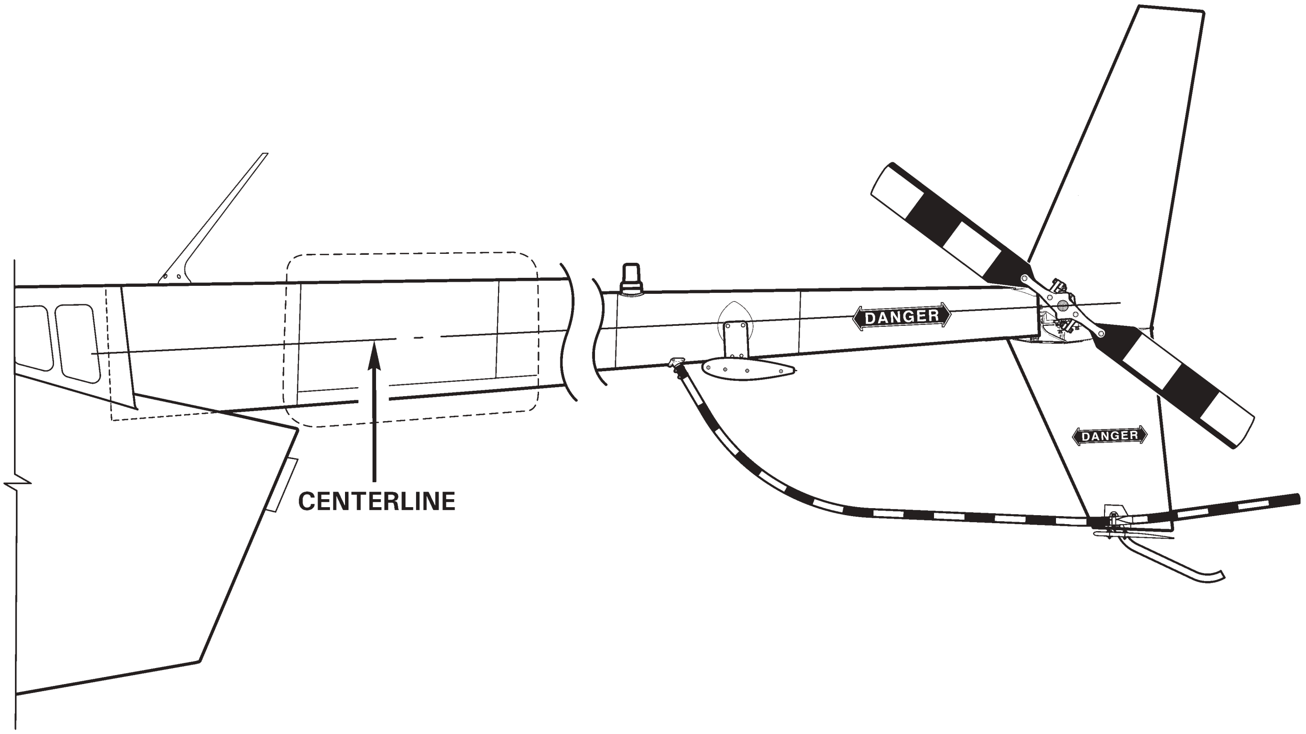

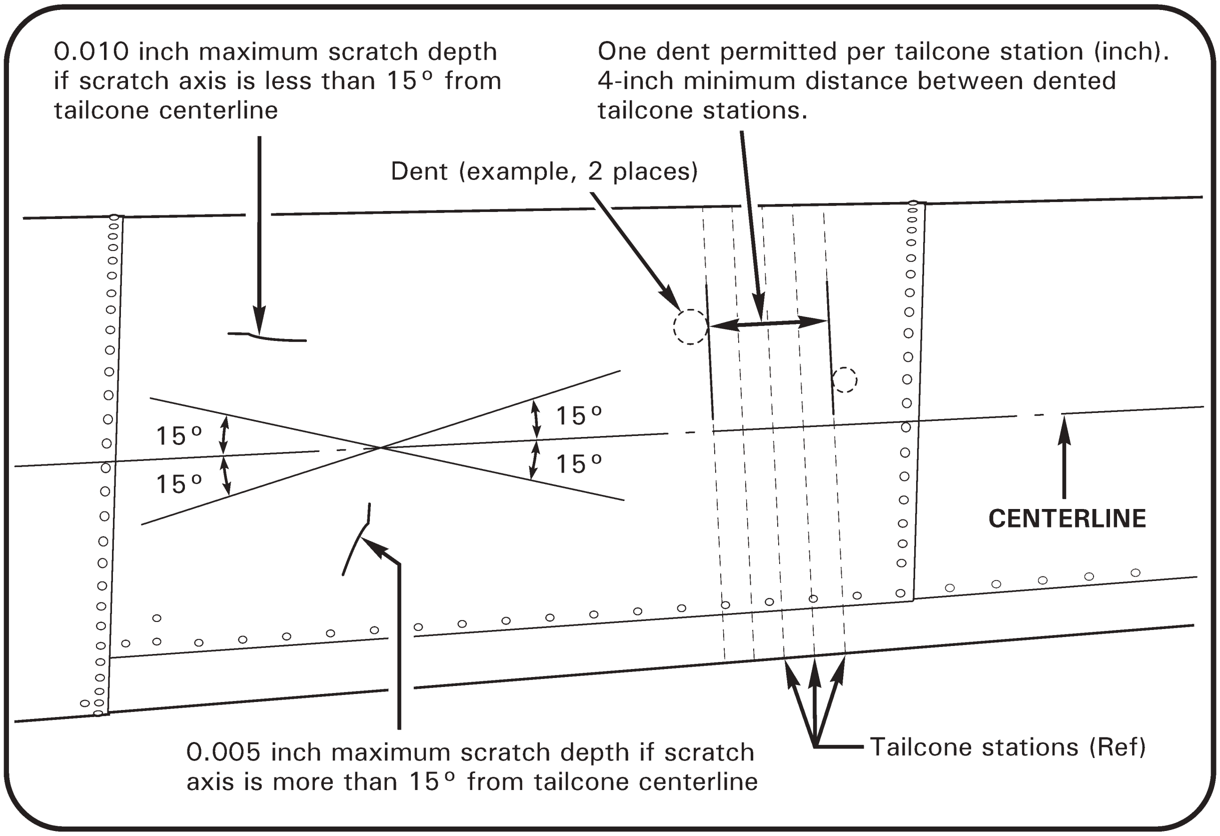

FIGURE 53-5 TAILCONE INSPECTION AND REPAIR

53-40 Tailcone Assembly (continued)

B. Installation (continued)

6. Connect tailcone wiring at connectors, connect two antenna cables inside tailcone forward bay, and connect antenna cables at forward bulkhead, as required. Individually test and verify correct function of tail position light, strobe, and TR chip light circuits.
7. Install MS3367-4-9 or -5-9 ty-raps as required to secure wire harness and cables to frame. Cinch ty-raps until snug without over-tightening, trim tips flush with heads.
8. Install tailcone cowling assembly per § 53-23. Install engine cowling assembly per § 53-21.

53-41 Inspection and Repair

This procedure outlines the inspection criteria and repair limits for the tailcone assembly. Repairs are limited to blending out scratches and refinishing skins. Contact RHC Technical Support if allowable damage is exceeded.

A. Scratches

1. Refer to Figure 53-5. Verify damage does not exceed the following limits:
   a. 0.005 inch maximum scratch depth if scratch axis is more than 15° from tailcone centerline.
   b. 0.010 inch maximum scratch depth if scratch axis is less than 15° from tailcone centerline.
2. If damage exceeds limits, return tailcone assembly to RHC for repair. If damage is within limits, blend out scratches with a 0.10 inch minimum blend radius. Refinish skins using approved materials per § 20-70.

B. Dents

NOTE

0.125 inch minimum radius can be verified with using a 0.250 inch diameter bearing ball: Place bearing ball within dent and back light with lamp; if light is visible between skin & ball (i.e. ball not contacting dent bottom) then dent radius is less than 0.125 inch.

1. Refer to Figure 53-5. Smooth, round bottom dents with 0.125 inch minimum radius without sharp nicks or cracks are acceptable when damage does not exceed the following limits:
   a. 0.030 inch maximum dent depth.
   b. 1.250 inch maximum dent diameter.
   c. One dent permitted per tailcone station (inch).
   d. 4.000 inch minimum distance between dented tailcone stations.
2. If damage exceeds limits, replace tailcone or return to RHC for repair.

53-50 Tail Rotor Guard Assembly

A. Removal

1. Refer to Figure 53-8. Loosen two (forward) fasteners securing D081-2 block and D079-1 guard assembly to C043-1 lower vertical stabilizer.
2. Remove hardware securing guard to D082-1 tube assembly. Slide guard off of tube, then forward through blocks. Remove D081-1 spacer from tube.

B. Installation

> **CAUTION**
>
> Do not install D079-1 revision U or prior tail rotor guard assembly on R66 helicopters.

1. Refer to Figure 53-8. Loosen two (forward) fasteners securing D081-2 block to C043-1 lower vertical stabilizer, if not previously accomplished. Insert D079-1 guard assembly aft through blocks.
2. Lightly coat retaining hardware and mating surfaces of D082-1 tube assembly and D079-1 guard assembly with § 20-70 approved primer, prior to installation.
3. Install D081-1 spacer inside tube. While wet with primer, slide guard onto tube and install hardware. Standard torque bolts per § 20-32, and torque stripe per Figure 5-1. Seal around end of guard with primer after assembly.
4. Verify D081 blocks clamp guard sleeve. For proper guard-to-stabilizer clamping, first standard torque (forward, top) NAS1351-4-53P screw and associate hardware per § 20-32, then special torque (forward, bottom) NAS1352-3-14P screw and associate hardware per § 20-33. Torque stripe fasteners per Figure 5-1.

Intentionally Blank

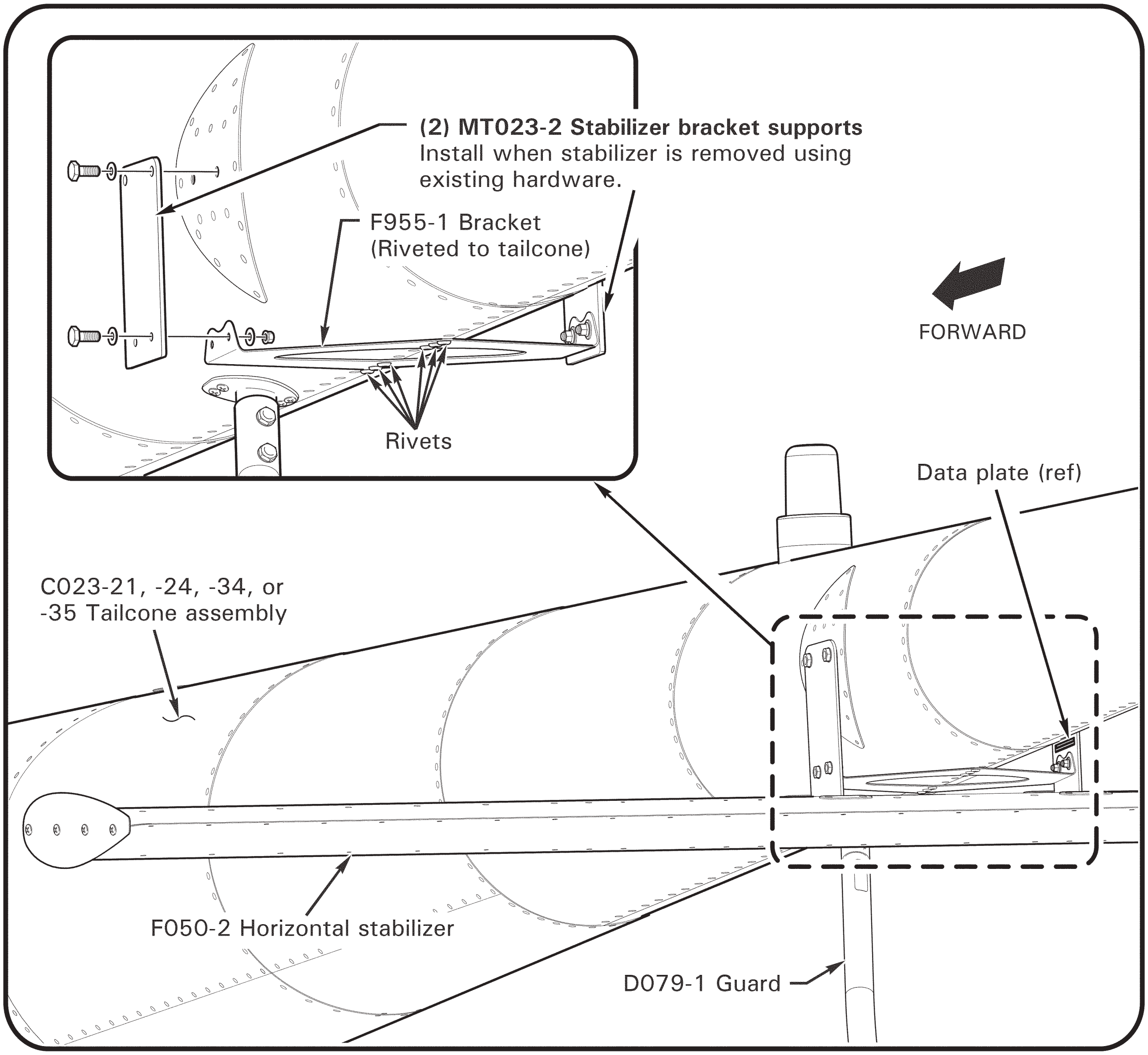

FIGURE 53-6 F050-2 HORIZONTAL STABILIZER ASSEMBLY

53-60 F050-2 Horizontal Stabilizer Assembly

> **CAUTION**
>
> If tailcone has an F955-1 bracket then F050-2 horizontal stabilizer must be installed.

> **CAUTION**
>
> Support F050-2 horizontal stabilizer assembly during removal or installation when upper bolts are removed. F955-1 bracket is riveted to bottom of tailcone assembly.

A. Removal

1. Refer to Figure 53-6. Remove hardware securing F050-2 horizontal stabilizer assembly to F955-1 bracket.
2. Supporting stabilizer, remove hardware securing stabilizer to tailcone assembly and remove stabilizer.
3. As required, install MT023-2 stabilizer bracket supports using removed hardware (recommended when stabilizer is removed).

B. Installation

1. If installed, remove hardware securing MT023-2 stabilizer bracket supports to F955-1 bracket & tailcone assembly and remove supports.
2. Supporting F050-2 horizontal stabilizer assembly, install hardware securing stabilizer to tailcone and bracket. Special torque bolts per § 20-33 and torque stripe per Figure 5-1.

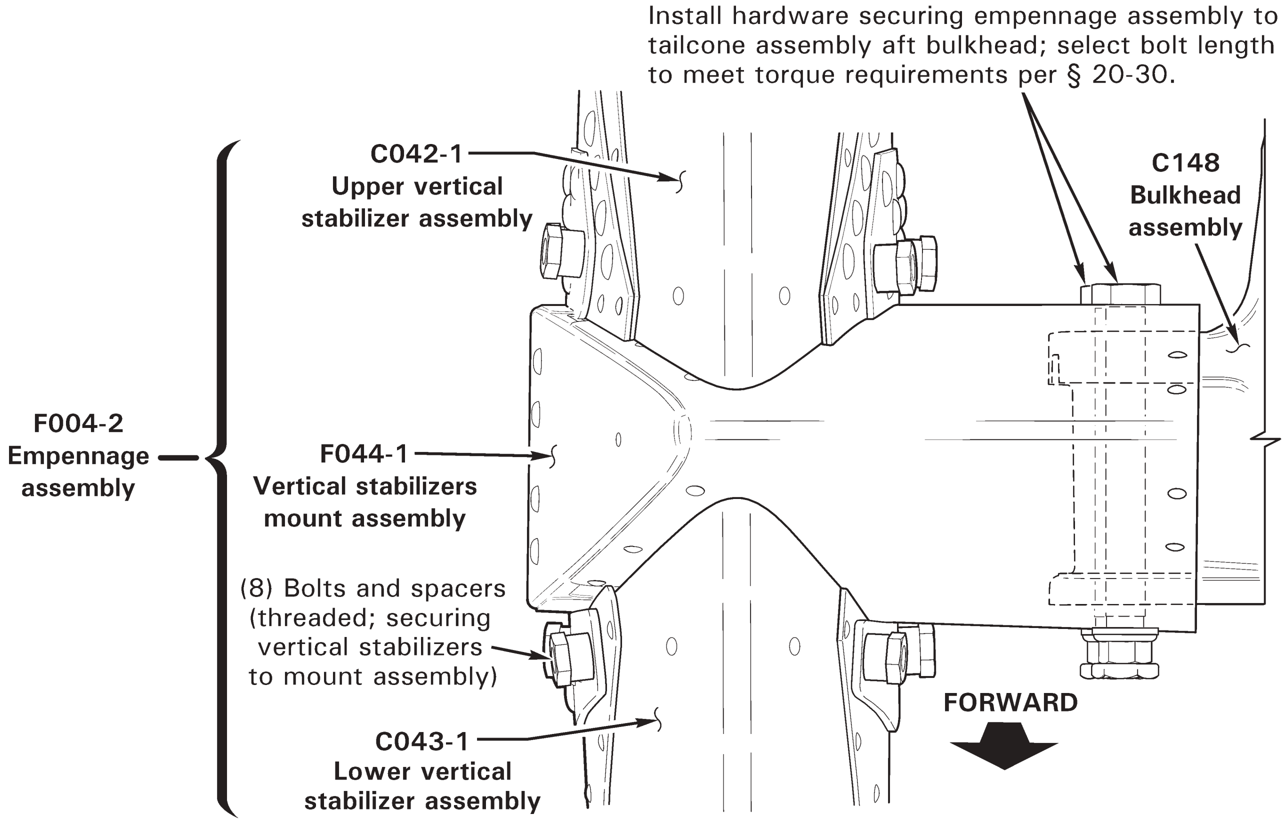

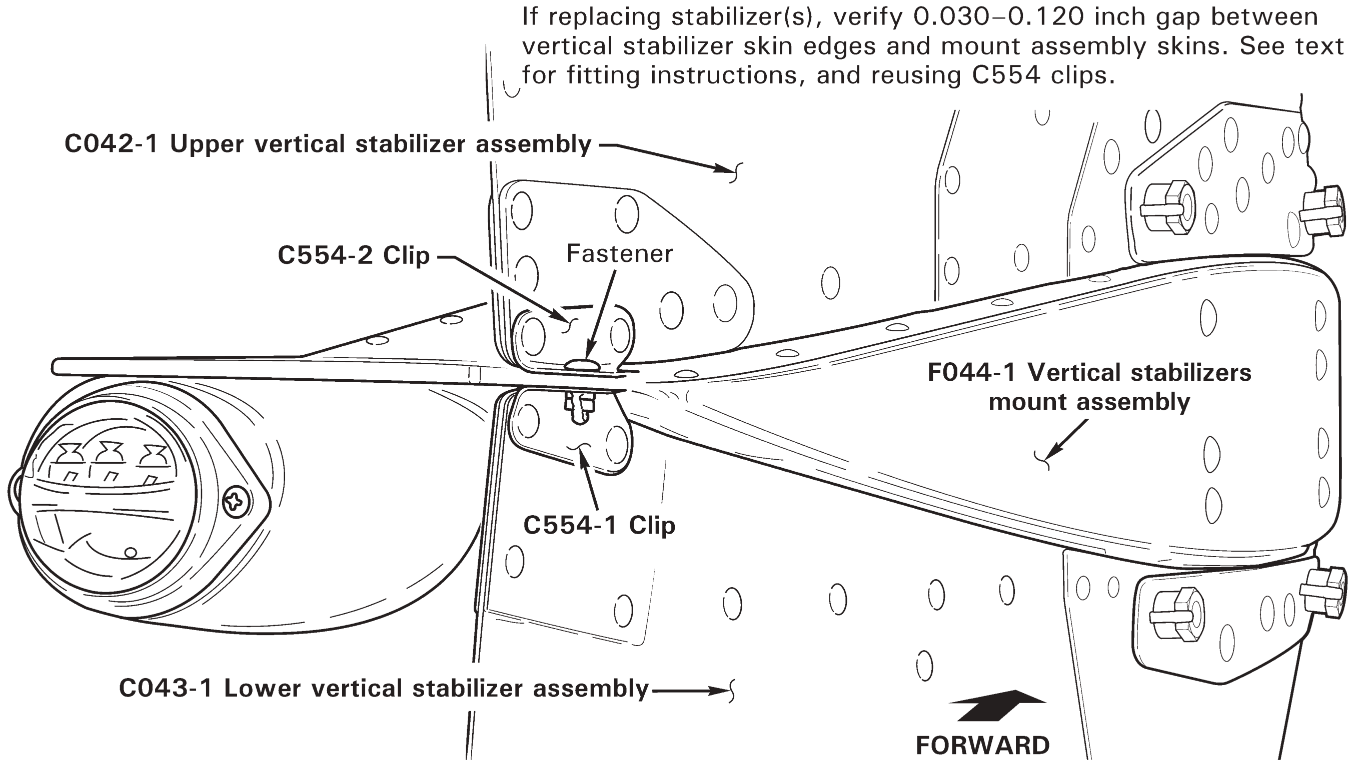

FIGURE 53-7 F004-2 EMPENNAGE ASSEMBLY – TAILCONE ASSEMBLY AFT BULKHEAD

53-70 Empennage Assembly

> **CAUTION**
>
> If tailcone has an F955-1 bracket then F050-2 horizontal stabilizer must be installed.
>
> C044-1 or -2 horizontal stabilizer may not be installed on a tailcone that has an F955-1 bracket.
>
> F044-1 vertical stabilizers mount assembly may only be installed on a tailcone that has an F955-1 bracket.
>
> As applicable, C050-2 or G950-2 stabilizer must always be installed.

A. Removal

1. Remove tail rotor guard assembly per § 53-50.
2. Remove hardware securing forward MS21919WDG3 clamp to F044-1 vertical stabilizers mount assembly (or C044-1 or -2 horizontal stabilizer, if installed). Cut and discard ty-raps securing position light and gearbox chip detector wires and connectors together. Disconnect position light at connectors.
3. Refer to Figure 53-7 or 53-7A. Supporting empennage assembly, remove hardware securing empennage to tailcone assembly aft bulkhead, and remove empennage.

B. Installation

1. Refer to Figure 53-7 or 53-7A. Position empennage assembly on tailcone assembly aft bulkhead.
   a. **If D301 (empennage ballast; ref. § 8-32) weights <u>will not</u> be installed:** Install (2) NAS6606-47 bolts & associated hardware securing empennage to aft bulkhead. Use (1) or (2) NAS1149F0663P washers under nut as required to meet torque requirements per § 20-30 Part E. Standard torque bolts and palnuts per § 20-32 and torque stripe per Figure 5-1.
   b. **If D301 (empennage ballast; ref. § 8-32) weights <u>will</u> be installed:** Install (2) NAS6606-78 bolts & associated hardware securing empennage to aft bulkhead. Use (1) or (2) NAS1149F0663P washers under nut as required to meet torque requirements per § 20-30 Part E; 1–4 threads may be exposed beyond primary nut. Standard torque bolts and palnuts per § 20-32 and torque stripe per Figure 5-1.
2. Connect position light wire connectors. Secure wires and install hardware securing forward MS21919WDG3 clamp to F044-1 vertical stabilizers mount assembly (or C044-1 or -2 horizontal stabilizer, if installed). Install MS3367-4-9 or -5-9 ty-raps as required to secure wires and connectors together. Cinch ty-raps until snug without over-tightening, and trim tips flush with heads.
3. Test and verify correct function of position and TR chip light circuits.
4. Install tail rotor guard assembly per § 53-50.

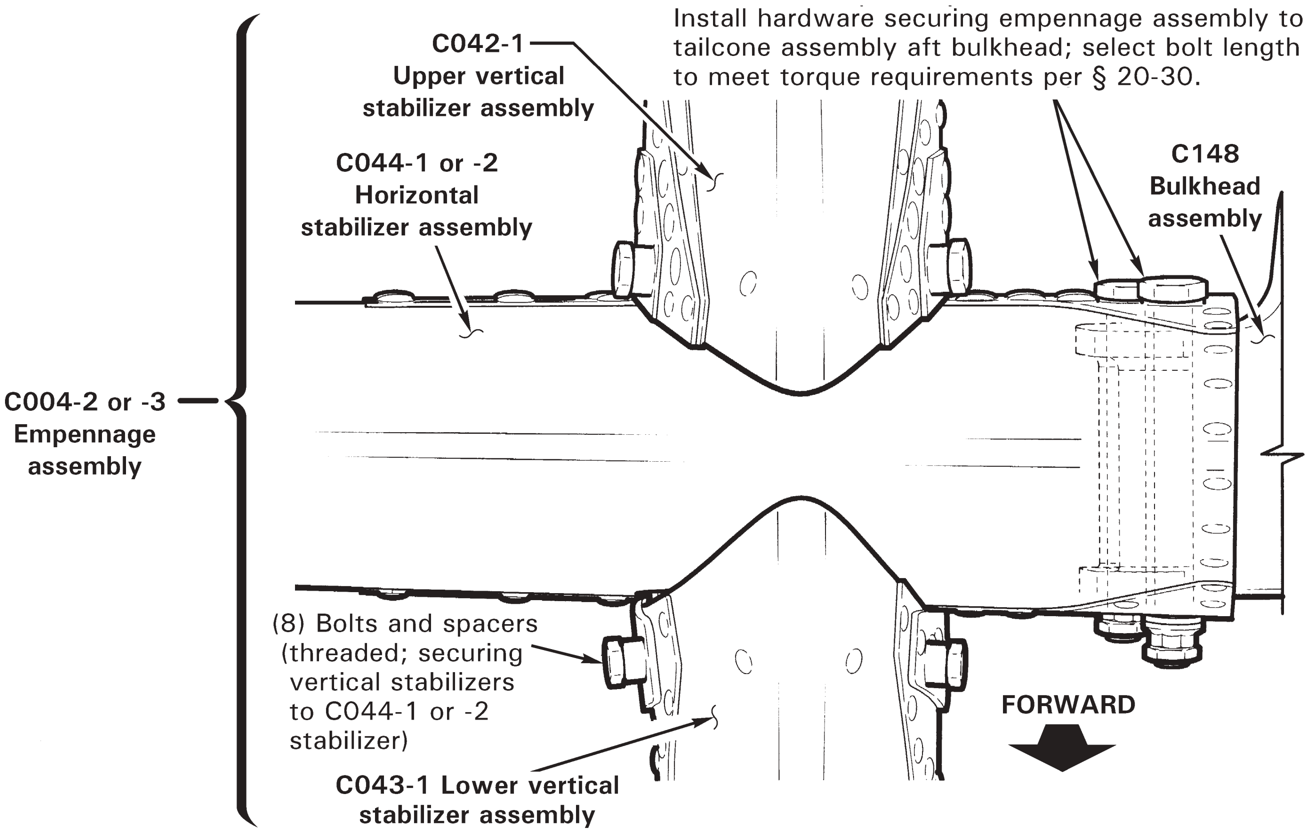

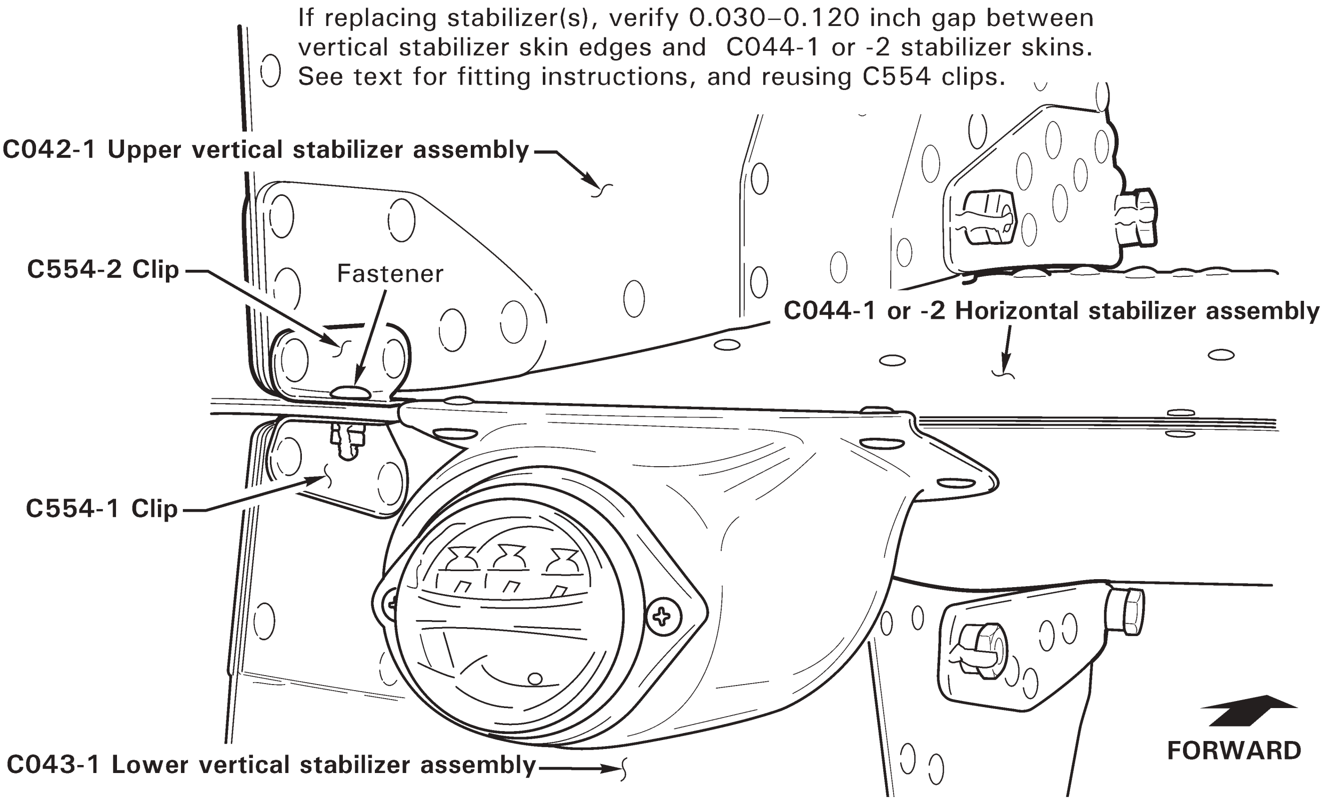

FIGURE 53-7A C004-2 OR C004-3 EMPENNAGE ASSEMBLY – TAILCONE ASSEMBLY AFT BULKHEAD

53-71 Upper Vertical Stabilizer Assembly

A. Removal

1. Refer to Figure 53-7 or 53-7A. Remove fastener securing C554-1 & -2 clips to F044-1 vertical stabilizers mount assembly (or C044-1 or -2 horizontal stabilizer, if installed).
2. Supporting C042-1 upper vertical stabilizer assembly, remove bolts & spacers securing C042-1 stabilizer to mount (or C044-1 or -2 stabilizer), and remove C042-1 stabilizer.
3. If replacing C042-1 stabilizer, C554-2 clip may be reused. Drill out two rivets securing clip to C042-1 stabilizer and remove clip.

B. Installation

1. Refer to Figure 53-7 or 53-7A. Position C042-1 upper vertical stabilizer assembly on empennage assembly. Verify 0.030–0.120 inch gap between vertical stabilizer skin edges and F044-1 vertical stabilizers mount assembly (or C044-1 or -2 horizontal stabilizer, if installed) upper skin. File vertical stabilizer skin edge(s) as required. Conversion coat & prime bare aluminum edges per §§ 20-51 & 20-60.
2. Install bolts & spacers securing vertical stabilizer to mount (or C044-1 or -2 stabilizer). Special torque bolts per § 20-33 and torque stripe per Figure 5-1.
3. Install fastener securing C554-1 & -2 clips to mount (or C044-1 or -2 stabilizer). If reusing C554-2 clip, install clip and fastener, and match drill clip to vertical stabilizer with #30 drill. Deburr holes and install rivets. Torque stripe fastener per Figure 5-1.

53-72 Lower Vertical Stabilizer Assembly

A. Removal

1. Remove tail rotor guard assembly per § 53-50.
2. As required, remove C050-2 or G950-2 horizontal stabilizer assembly per § 53-80, and tail skid per § 53-90.
3. Refer to Figure 53-7 or 53-7A. Remove fastener securing C554-1 & -2 clips to F044-1 vertical stabilizers mount assembly (or C044-1 or -2 horizontal stabilizer, if installed).
4. Supporting C043-1 lower vertical stabilizer assembly, remove bolts & spacers securing C043-1 stabilizer to mount assembly (or C044-1 or -2 stabilizer), and remove C043-1 stabilizer.
5. If replacing C043-1 stabilizer, C554-1 clip may be reused. Drill out two rivets securing clip to C043-1 stabilizer and remove clip.

B. Installation

1. Refer to Figure 53-7 or 53-7A. Position C043-1 lower vertical stabilizer assembly on empennage assembly. Verify 0.030–0.120 inch gap between vertical stabilizer skin edges and F044-1 vertical stabilizers mount assembly (or C044-1 or -2 horizontal stabilizer, if installed) lower skin. File vertical stabilizer skin edge(s) as required. Conversion coat & prime bare aluminum edges per §§ 20-51 & 20-60.
2. Install bolts & spacers securing vertical stabilizer to mount (or C044-1 or -2 stabilizer). Special torque bolts per § 20-33 and torque stripe per Figure 5-1.
3. Install fastener securing C554-1 & -2 clips to mount (or C044-1 or -2 stabilizer). If reusing C554-1 clip, install clip and fastener, and match drill clip to vertical stabilizer with #30 drill. Deburr holes and install rivets. Torque stripe fastener per Figure 5-1.
4. Install C050-2 or G950-2 horizontal stabilizer assembly per § 53-80, and tail skid per § 53-90, as required.
5. Install tail rotor guard assembly per § 53-50.

53-73 F044-1 Vertical Stabilizers Mount Assembly

A. Removal

1. Remove C042-1 & C043-1 vertical stabilizer assemblies per §§ 53-71 & 53-72.
2. Remove hardware securing forward clamp to F044-1 vertical stabilizers mount assembly. Cut and discard ty-raps securing position light and gearbox chip detector wires and connectors together. Disconnect position light at connectors.
3. Supporting mount assembly, remove hardware securing mount to tailcone assembly aft bulkhead and remove mount.

B. Installation

> **CAUTION**
>
> F044-1 vertical stabilizers mount assembly may only be installed on a tailcone that has an F955-1 bracket.

1. Position F044-1 vertical stabilizers mount assembly on tailcone assembly aft bulkhead.
   a. **If D301 (empennage ballast; ref. § 8-32) weights will not be installed:** Install (2) NAS6606-47 bolts & associated hardware securing empennage to aft bulkhead. Use (1) or (2) NAS1149F0663P washers under nut as required to meet torque requirements per § 20-30 Part E. Standard torque bolts and palnuts per § 20-32 and torque stripe per Figure 5-1.
   b. **If D301 (empennage ballast; ref. § 8-32) weights will be installed:** Install (2) NAS6606-78 bolts & associated hardware securing empennage to aft bulkhead. Use (1) or (2) NAS1149F0663P washers under nut as required to meet torque requirements per § 20-30 Part E; 1–4 threads may be exposed beyond primary nut. Standard torque bolts and palnuts per § 20-32 and torque stripe per Figure 5-1.
2. Install C042-1 & C043-1 vertical stabilizer assemblies per §§ 53-71 & 53-72.
3. If mount assembly was replaced, match drill C554-1 & -2 clips 0.144-inch diameter hole through mount. Deburr hole and install fastener.
4. Connect position light at connectors. Install hardware securing forward clamp to mount assembly. Install MS3367-4-9 or -5-9 ty-raps as required to secure position light and gearbox chip detector wires and connectors together. Cinch ty-raps until snug without over-tightening, and trim tips flush with heads.
5. Test and verify correct function of position and TR chip light circuits.

53-74 C044-1 or -2 Horizontal Stabilizer Assembly

A. Removal

1. Remove C042-1 & C043-1 vertical stabilizer assemblies per §§ 53-71 & 53-72.
2. Remove hardware securing forward clamp to C044-1 or -2 horizontal stabilizer assembly. Cut and discard ty-raps securing position light and gearbox chip detector wires and connectors together. Disconnect position light at connectors.
3. Supporting stabilizer, remove hardware securing stabilizer to tailcone assembly aft bulkhead and remove stabilizer.

B. Installation

CAUTION
C044-1 or -2 horizontal stabilizer may not be installed on a tailcone that has an F955-1 bracket.

1. Position C044-1 or -2 horizontal stabilizer assembly on tailcone assembly aft bulkhead.
    a. **If D301 (empennage ballast; ref. § 8-32) weights will not be installed:** Install (2) NAS6606-47 bolts & associated hardware securing empennage to aft bulkhead. Use (1) or (2) NAS1149F0663P washers under nut as required to meet torque requirements per § 20-30 Part E. Standard torque bolts and palnuts per § 20-32 and torque stripe per Figure 5-1.
    b. **If D301 (empennage ballast; ref. § 8-32) weights will be installed:** Install (2) NAS6606-78 bolts & associated hardware securing empennage to aft bulkhead. Use (1) or (2) NAS1149F0663P washers under nut as required to meet torque requirements per § 20-30 Part E; 1–4 threads may be exposed beyond primary nut. Standard torque bolts and palnuts per § 20-32 and torque stripe per Figure 5-1.
2. Install C042-1 & C043-1 vertical stabilizer assemblies per §§ 53-71 & 53-72.
3. If horizontal stabilizer was replaced, match drill C554-1 & -2 clips 0.144-inch diameter hole through horizontal stabilizer. Deburr hole and install fastener.
4. Connect position light at connectors. Install hardware securing forward clamp to horizontal stabilizer. Install MS3367-4-9 or -5-9 ty-raps as required to secure position light and gearbox chip detector wires and connectors together. Cinch ty-raps until snug without over-tightening, and trim tips flush with heads.
5. Test and verify correct function of position and TR chip light circuits.

53-74 C044-1 or -2 Horizontal Stabilizer Assembly (continued)

C. Repair

A single dent on C044-1 or -2 horizontal stabilizer leading edge outboard of vertical stabilizers is permitted provided:

1. Dent is no more than 0.050 inch deep.
2. Dent must have a smooth bottom, with minimum 0.125-inch radius, and no sharp nicks or cracks.
3. Dent must be less than 1.25 inches spanwise.
4. It is permissible to remove above dent via metalworking.

Depending on the damage, U.S. FAA AC (Advisory Circular) 43.13-1B may be used to repair some horizontal stabilizer minor skin damage; refer to the AC's Title Page for limitations. Use only 0.020-inch thick 2024T3 aluminum sheet for repairs; do not use thicker sheet. Skin replacement, damage to spars, and either forward or middle attachment for vertical stabilizers, is not field repairable.

To inspect spars, remove NAS1919B04S01 rivets securing D292-3 outboard rib. Only the inboard D292-2 nose rib or D292-3 outboard tip rib may be field replaced; all other parts require use of the factory jig.

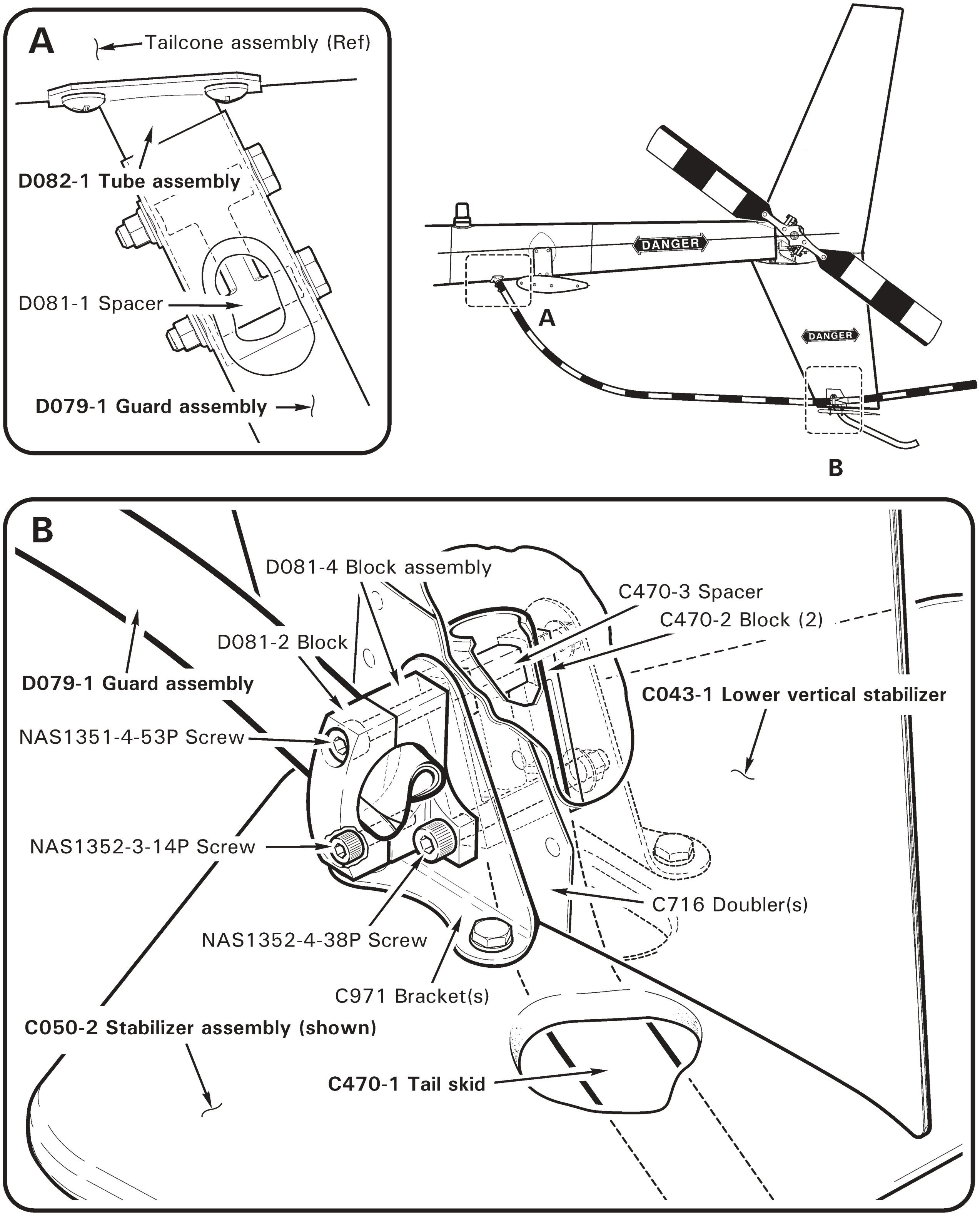

FIGURE 53-8 EMPENNAGE – TAIL ROTOR GUARD

53-80 C050-2 or G950-2 Horizontal Stabilizer Assembly

CAUTION

As applicable, C050-2 or G950-2 stabilizer must always be installed.

A. Removal

1. Remove tail skid per § 53-90.
2. Refer to Figure 53-8. Using plastic scraper, remove sealant around edges where C050-2 or G950-2 horizontal stabilizer assembly brackets attach to C043-1 lower vertical stabilizer assembly doublers. Remove horizontal stabilizer assembly.

B. Installation

1. Refer to Figure 53-8. Position C050-2 or G950-2 horizontal stabilizer assembly on C043-1 lower vertical stabilizer assembly and install tail skid per § 53-90.
2. Seal horizontal stabilizer bracket edges to lower vertical stabilizer doublers using B270-1 sealant.

53-90 Tail Skid

A. Removal

1. Refer to Figure 53-8. Support D079-1 guard assembly. Remove hardware securing D081-2 block to C043-1 lower vertical stabilizer assembly and remove block.
2. Support C050-2 or G950-2 horizontal stabilizer assembly and C470-1 tail skid. Remove hardware securing D081-4 block assembly to C043-1 stabilizer and remove block.
3. Remove C470-1 tail skid from C043-1 stabilizer. Remove C470-3 spacer from skid, as required. Support guard and C050-2 or G950-2 stabilizer while hardware is removed.

B. Installation

1. Refer to Figure 53-8. As required, install C470-3 spacer inside C470-1 tail skid wet with epoxy primer. Position tail skid inside C043-1 lower vertical stabilizer, position D081-4 block assembly and install hardware securing block assembly to stabilizer but do not torque at this time.
2. Position D079-1 guard assembly and D081-2 block, install hardware securing block to stabilizer. Verify D081-2 & -4 blocks clamp guard sleeve. For proper guard-to-stabilizer clamping, first standard torque hardware securing tail skid per § 20-32, then special torque screw securing D081-2 block to D081-4 block per § 20-33. Torque stripe fasteners per Figure 5-1.

Intentionally Blank

CHAPTER 62

MAIN ROTOR

Section	Title	Page
62-00	Description	62.1
62-10	Main Rotor Blades	62.1
62-11	Blade Boots	62.6
62-20	Main Rotor Hub	62.7
62-21	Bearing Replacement	62.9
62-22	Inspection and Repair	62.10A
62-30	Main Rotor Assembly	62.11
62-31	Journal and Shim Calculations	62.11
62-32	Adjusting Hinge Friction	62.15
62-33	Shifting the Main Rotor Hub	62.16
62-34	Drilling Main Rotor Hub Bolts	62.16
62-35	Static Balance	62.17B
62-40	Inspection of Main Rotor Blades	62.18
62-41	Scratches and Corrosion	62.19
62-42	Dents	62.20
62-43	Spar Damage	62.21A
62-44	Root Fitting Damage	62.21B
62-45	Nicks and Notches	62.23
62-46	Voids and Debonds	62.25
62-50	Repair of Main Rotor Blades	62.27
62-51	Sealing, Filling, and Fairing	62.27
62-52	Painting	62.28
62-60	Main Rotor Blade Tip Maintenance	62.29

Intentionally Blank

CHAPTER 62

MAIN ROTOR

62-00 Description

The main rotor has two all-metal blades and a forged-aluminum hub. Blades mount to the hub by coning hinge; the hub mounts to the main rotor shaft by teeter hinge. Coning and teeter hinges have self-lubricated bearings inside the hub.

The leading edge of the main rotor blade is a corrosion and erosion resistant stainless-steel spar. Aluminum skins are bonded to the spar approximately one inch aft of the leading edge, to the aluminum honeycomb core, and to the forged-aluminum root fitting.

Each blade has six pitch change bearings that attach to a forged, stainless-steel spindle. The bearings and part of the spindle are submerged in oil inside the root fitting housing. The housing is sealed with an elastic boot. The spindle tusk contacts an aluminum droop stop attached to the main rotor shaft, to minimize teetering when blades are at rest or turning at low RPM.

62-10 Main Rotor Blades

WARNING

Due to potentially destructive results, use of blade tape (anti-erosion tape) is prohibited.

A. Removal

Refer to Figure 62-1. Four people will be required to remove the blades. One person must support the blade approximately 2/3 its length from the root while another supports the root and removes or installs the attached bolt. Each F016-2 main rotor blade & spindle assembly weighs approximately 80 pounds.

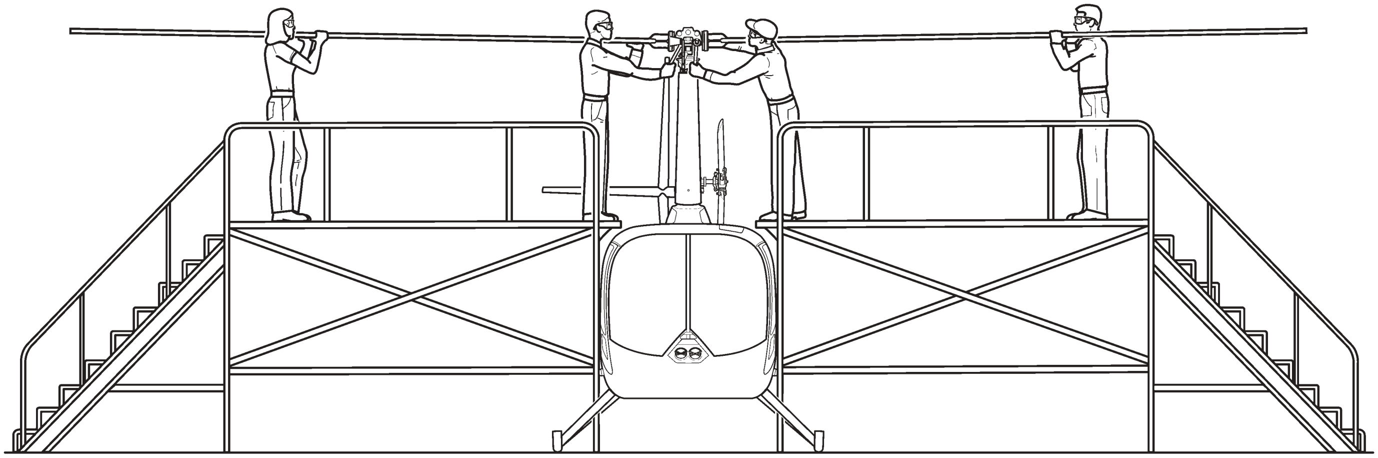

FIGURE 62-1 SUPPORTING MAIN ROTOR BLADES DURING BLADE REMOVAL OR INSTALLATION

62-10 Main Rotor Blades (continued)

A. Removal (continued)

1. Mark one blade and its corresponding hinge nut & bolt, pitch link and rotor head location with a colored marker, such as a grease pencil and, mark as “X”. Using a different color marker, mark as “O”, on the other blade, nut, bolt, pitch link and rotor head location.
2. Measure and record coning hinge axial gaps per Figure 62-7A.
3. Remove hardware securing pitch links to blade pitch horns.
4. Remove cotter pins and loosen blade coning hinge nuts until finger tight.

> **CAUTION**
>
> Support remaining main rotor blade in a level position during and after removal of opposite blade.

5. Remove nut, thrust washer, and trailing-edge shims (if used) from one blade. Cone blade as required to position spindle tusk off of droop stop. Supporting blade at root, rotate pitch horn down and remove hinge bolt & thrust washer.

> **CAUTION**
>
> Do not drop journals (inside hub bearings) which can slide out when removing blade bolt.

> NOTE
>
> Installation hardware is specific to each blade; carefully reinstall all attach hardware including journals into rotor hub, or spindle, exactly as removed.

6. Store rotor blades on a cushioned surface to prevent damage to blade skins.
7. Repeat step 5 to remove remaining blade.

B. Installation

1. If both blades have been removed, measure teeter hinge friction per Figure 62-7B, and adjust as required per § 62-32.
2. If previously installed information is unavailable, select coning hinge journals and shims per § 62-31.
3. With rotor hub level, insert journals into coning hinge bearings. Install thrust washer on coning hinge bolt.

> **CAUTION**
>
> To prevent damage, level and support installed blade until opposite blade is installed.

62-10 Main Rotor Blades (continued)

B. Installation (continued)

4. Position blade in hub until spindle hole aligns with journal bores, coning blade as required to keep tusk away from droop stop. Rotate pitch horn down and install hinge bolt at leading-edge side.

> NOTE
>
> To assist bolt installation, temporarily insert an old bolt from trailing-edge side to align spindle with journals.

5. Install trailing-edge shims (if used) & thrust washer and, prior to installing nut, coat bolt threads and nut face with A257-9 anti-seize compound.

> **CAUTION**
>
> Do not allow anti-seize compound to contact journals or hub bearing areas. These areas must be clean and dry.

6. With installed blade level and supported near tip, install opposite blade per steps 1 thru 5.

7. Tighten nut on hinge bolt until journals and thrust washer are firmly seated. Then loosen nut until both thrust washers can be freely rotated.

8. Install MT122-6 main rotor bolt stretch tool on hinge bolt per Figure 62-2. Zero dial indicator by rotating dial face. Lock dial and remove tool.

> **WARNING**
>
> **Do not under-stretch or over-stretch teeter or coning hinge bolts. Discard bolt and nut if stretched more than 0.024 inch.**

9. Using wrenches with at least 600 ft-lb torque capacity, tighten nut until drilled holes in nut and bolt align. Install MT122-6 tool and measure bolt stretch:

   a. Verify stretch is between 0.020–0.022 inch. Check thrust washer-to-hub bearing gap per Figure 62-7A; if gap is correct install a new cotter pin wet with approved primer. If stretch is not between 0.020–0.022 inch, or if thrust washer-to-hub bearing gap is incorrect, discard bolt & nut. Replace with new bolt & nut per step b.

   b. Perform steps 5 thru 9 using new (undrilled) bolt. Stretch bolt to 0.021–0.022 inch; if bolt stretched more than 0.024 inch, discard bolt & nut and replace with new. Check thrust washer-to-hub bearing gap per Figure 62-7A; adjust gap per § 62-32 Part B, as required. Drill bolt & nut per § 62-34 and install a new cotter pin wet with approved primer.

10. Perform steps 8 thru 10 for opposite blade.

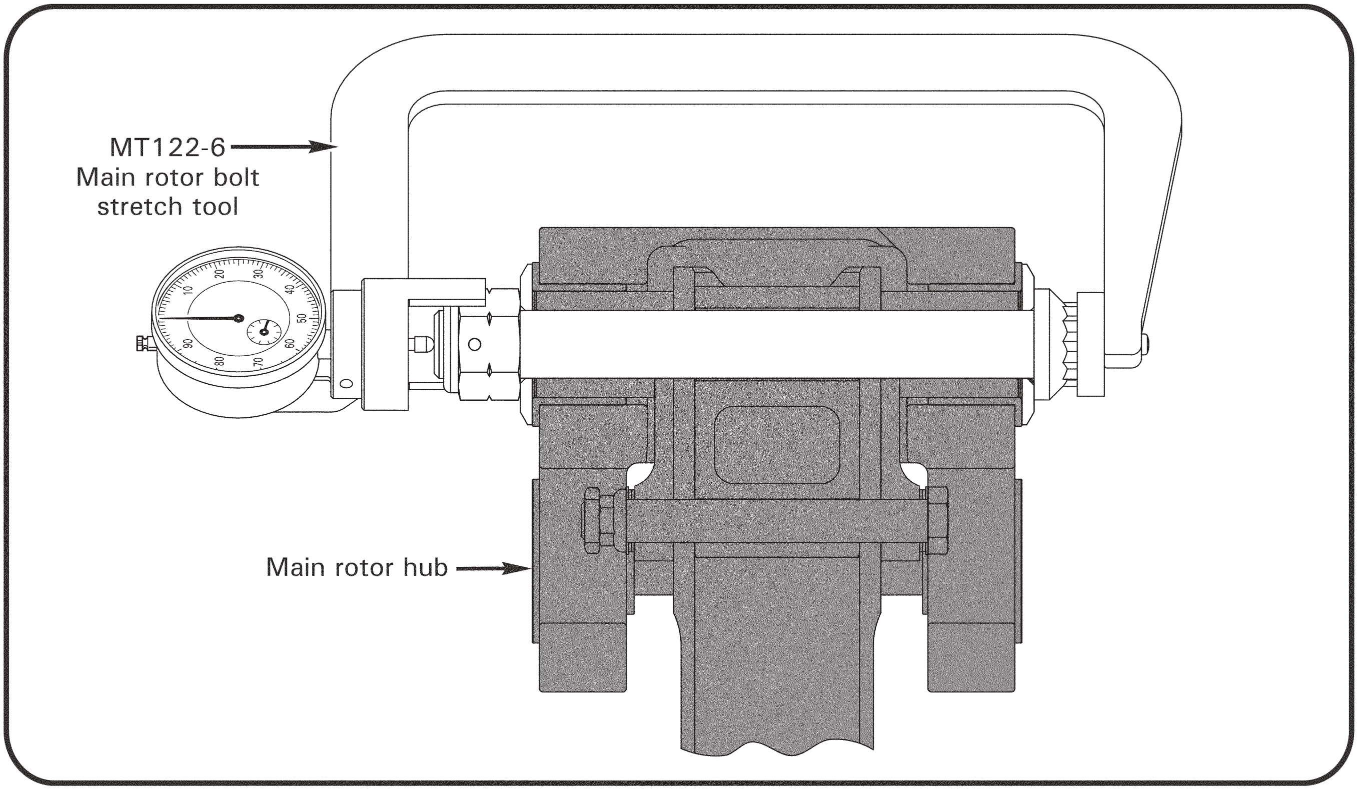

FIGURE 62-2 MEASURING BOLT STRETCH
(Shown on teeter hinge bolt)

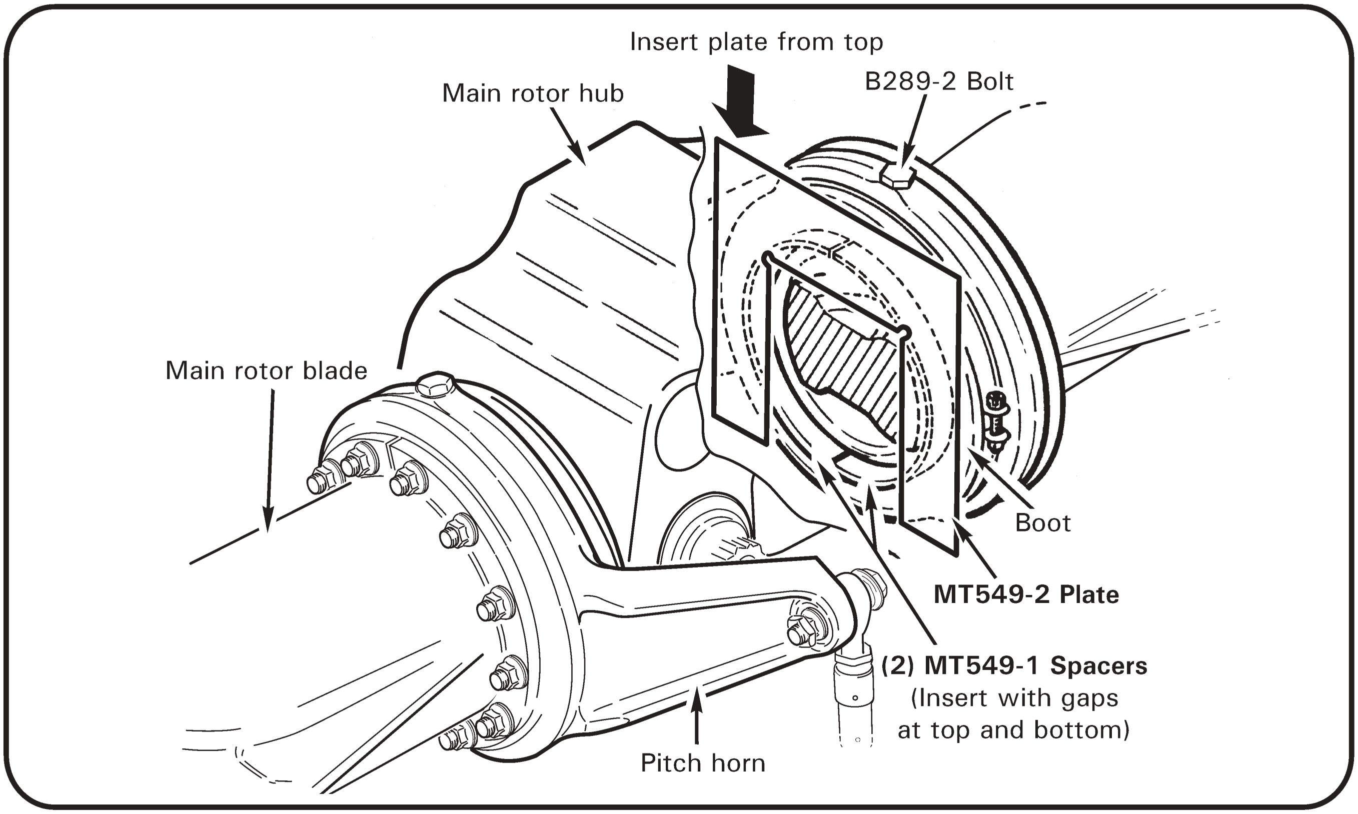

FIGURE 62-3 ADJUSTING BOOT CLEARANCE

62-10 Main Rotor Blades (continued)

B. Installation (continued)

11. Lift both blades off droop stops by raising blade tips; independently cone each blade and verify hub does not teeter.
12. Install hardware securing each pitch link to correct pitch horn. Standard torque hardware per § 20-32 and torque stripe per Figure 5-1.
13. Position cyclic and collective at approximately mid-travel positions to minimize wrinkles in boots.
14. Refer to Figure 62-3. Insert (2) MT549-1 spacers between hub and boot with gaps at top and bottom. Spacers should fit in recess of boot. Hold spacers in place against boot and insert MT549-2 plate from top between hub and spacers. Push plate down until it contacts spindle.
15. Place a suitable container beneath pitch horn's lower B289-2 bolt. Remove lower bolt from pitch horn and allow oil to flow. Place a finger over hole as soon as oil flow decreases to a drip to prevent air from being sucked inside blade.
16. Remove finger from hole and quickly install drain B289-2 bolt. Special torque per § 20-33 and torque stripe per Figure 5-1.
17. Remove plate and spacers. Repeat on second blade.
18. Track and balance main rotor blades per § 18-10.

CAUTION

When fitting replacement main rotor blade(s), remove both main rotor blade tip covers after initial run-up and clean out debris.

62-11 Blade Boots

A. **Removal**

1. Remove main rotor blades per § 62-10.
2. Place a suitable drain container below main rotor blade spindle assembly. Remove two B289-2 bolts and drain fluid.
3. Remove outer boot clamp and hold boot back to expose inner boot clamp. Remove inner clamp and peel boot from spindle. Boot inner portion may be sealed to spindle with B270-1 sealant.
4. As required, use a plastic scraper and vacuum cleaner to remove old B270-1 sealant from spindle area to be covered by boot inner lip. Avoid contaminating spindle bearings with old sealant.

WARNING

Use only plastic scrapers to remove old sealant; chemical removal is prohibited.

B. **Installation**

NOTE

C156-1 (Black) blade boots are standard; C156-2 (grey) boots are optional for use in sub-freezing temperatures.

1. Visually inspect and verify boot is undamaged. Carefully stretch new boot over spindle.
2. Solvent-clean surfaces clamped by boot inner lip. Properly position boot inner lip; install C165-1 (inner) clamp assembly and tighten clamp to 2.850 ± 0.005 inch outside diameter. Rotate spindle and verify adequate clearance between clamp assembly and pitch horn.

NOTE

When installing inner clamp, ensure that shoulder of boot inner lip is not wedged beneath clamp or clamp may loosen in service. Inspect boot interior and verify no cuts or punctures.

3. Stretch boot outer lip over pitch horn flange. Rotate spindle and align pitch horn arm bolt hole with spindle bolt hole centerlines. Install C165-2 (outer) clamp assembly and tighten clamp. Verify security.
4. Fill pitch bearing housing per § 12-51.

62-20 Main Rotor Hub

A. Removal

1. Remove main rotor blades per § 62-10.
2. Refer to Figure 62-6A. Mark rotor hub using a grease pencil or soft marker as follows:
   a. Indicate nut side of teeter bolt.
   b. Indicate chord arm side of drive shaft.
3. Remove cotter pin, nut, thrust washers, C117 shims, C106 journals, and bolt. Rotate hub as required and remove hub. Do not drop C152 thrust washers or C106 journals.
4. Reinstall bolt, thrust washers, shims, journals, and nut in rotor hub exactly as removed.

CAUTION

Main rotor chordwise balance can be affected by changing C106 journals and/or C117 shims. If previous hardware stackup is altered more than 0.012 inch perform static balance per § 62-35.

B. Installation

1. Clean and dry teeter hinge hardware using approved solvent per § 20-70. Inspect journals and thrust washers for chipping of chrome plating, corrosion, and/or wear grooves extending through chrome plating (0.0006 inch maximum wear). Replace journal or thrust washer if any of these conditions exist.
2. Line up mark on hub with chord arm on rotor shaft.
3. Refer to Figure 62-6A. Reinstall teeter hinge bolt, thrust washers, shims, and journals exactly as removed. If previously installed information is unavailable, perform teeter hinge journal and shim calculation per § 62-31. Ensure journals fully contact drive shaft and do not pinch upper edge of droop stops.
4. Coat nut face and bolt threads with A257-9 anti-seize compound, install and tighten nut, then loosen nut until both thrust washers can be freely rotated.

WARNING

Do not allow anti-seize compound to contaminate drive shaft, journals, shims, or thrust washer inner faces. Contamination prevents proper joint clamp-up and may cause failure.

5. Position MT122-6 main rotor bolt stretch tool on teeter bolt per Figure 62-2. Zero and lock dial indicator. Remove tool.

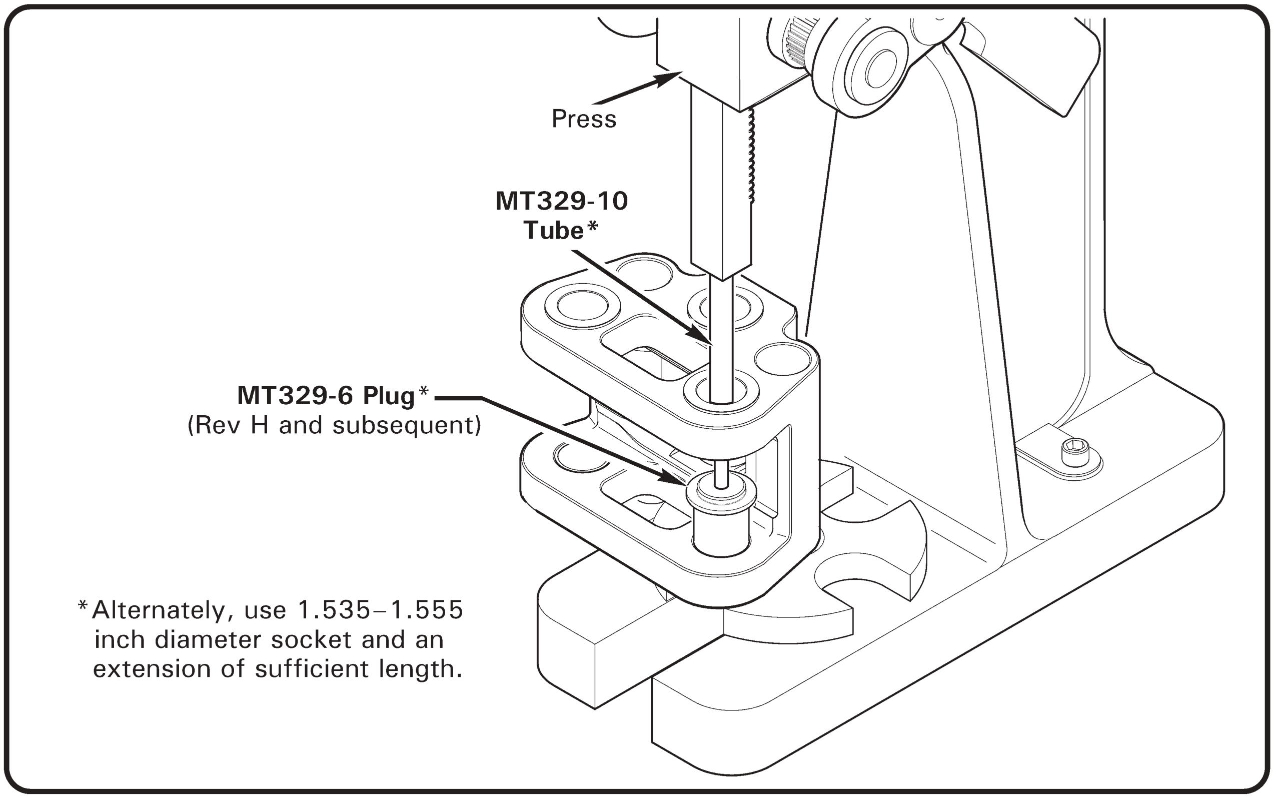

FIGURE 62-4A MAIN ROTOR HUB BEARING REMOVAL

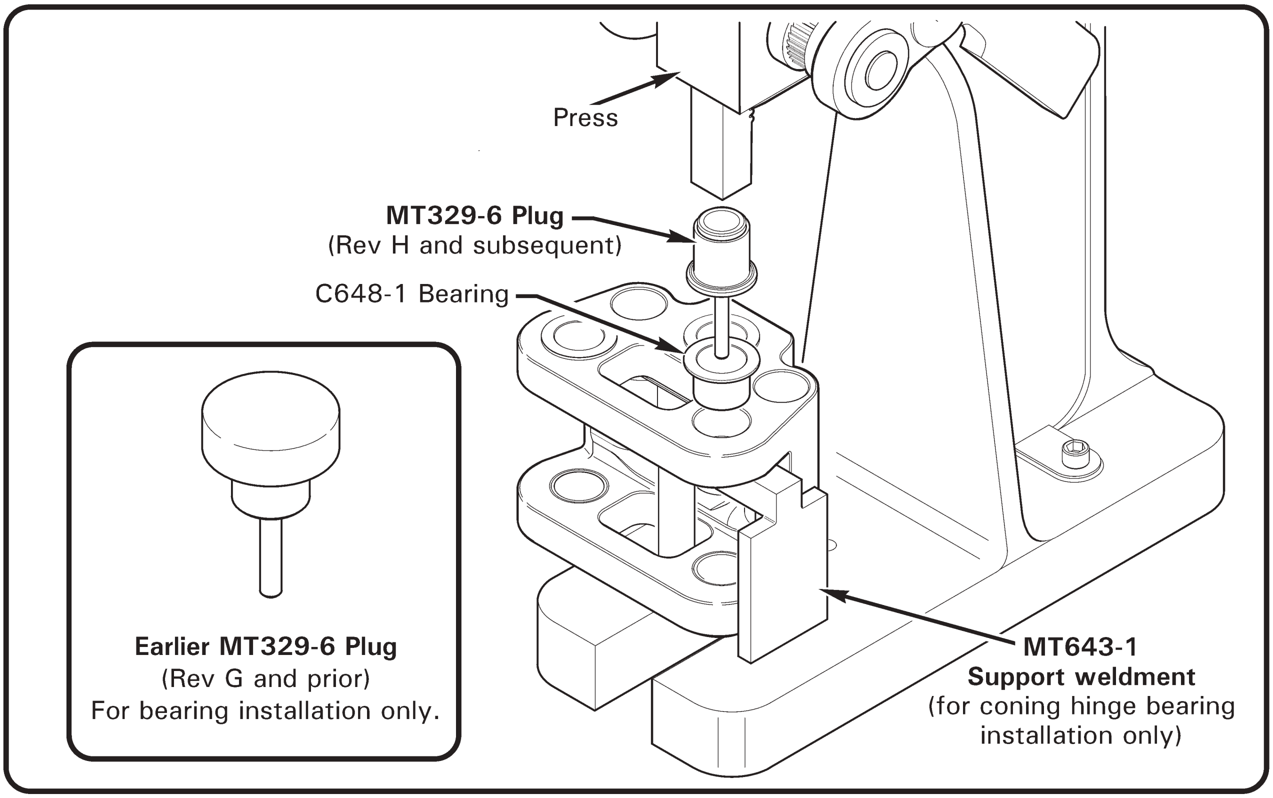

FIGURE 62-4B MAIN ROTOR HUB BEARING INSTALLATION

62-20 Main Rotor Hub (continued)

B. Installation (continued)

WARNING

Do not under-stretch or over-stretch teeter or coning hinge bolts. Discard bolt and nut if stretched more than 0.024 inch.

6. Using wrenches with at least 600 ft-lb torque capacity, tighten nut until drilled holes in nut and bolt align. Install MT122-6 tool and measure bolt stretch:

   a. Verify stretch is between 0.020–0.022 inch, remove tool and install a new cotter pin wet with approved primer. Verify correct teeter hinge friction per Figure 62-7B. If bolt stretch is not between 0.020–0.022 inch, or if teeter hinge friction is incorrect, discard bolt and nut; replace with new per step b.

   b. Stretch (undrilled) bolt to 0.021–0.022 per § 20-33. If bolt stretched to 0.024 inch, discard bolt and nut; replace with new. Verify correct teeter hinge friction per Figure 62-7B; adjust as required. Drill bolt and nut per § 62-34 and install a new cotter pin wet with approved primer.

62-21 Bearing Replacement

1. Remove main rotor hub per § 62-20.
2. Refer to Figure 62-4A. Verify tooling surfaces are smooth to avoid damaging hub and bearings. Press old bearing(s) out of hub using MT329-6 (Rev H or subsequent) plug & MT329-10 tube. Alternately, use 1.535–1.555 inch diameter socket and an extension of sufficient length.
3. Visually inspect hub bearing bore(s) per § 62-22 step 3a.

NOTE

Do not allow primer to contact bearing’s Teflon® liner.

4. Refer to Figure 62-4B. Verify bearing mating surfaces are smooth and clean and apply light coat of § 20-75 approved primer (chromate primer preferred). If visible, orient coning hinge bearing’s Teflon® liner seam toward top of hub. While primer is wet, press in new bearing using MT329-6 plug (and MT643-1 support if replacing coning hinge bearing) until bearing flange is completely seated against hub.
5. Using a syringe, seal between bearing’s outboard flange and hub and bearing’s inboard edge and hub with small fillet of approved primer.
6. As required, perform shim calculation(s) per § 62-31 upon reinstallation.

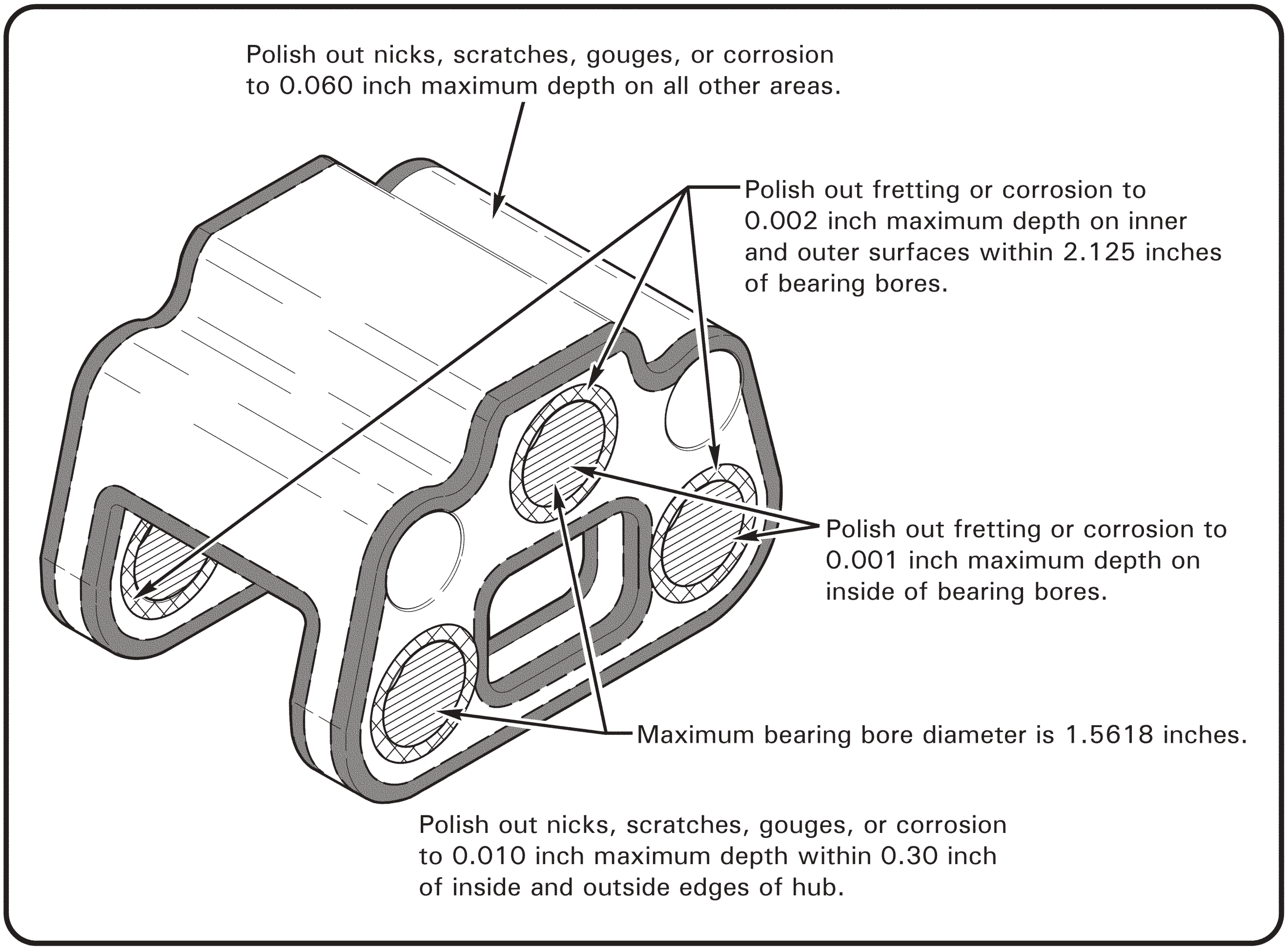

FIGURE 62-5 MAIN ROTOR HUB REPAIR LIMITS

62-22 Inspection and Repair

1. Remove main rotor hub bearings per § 62-21 steps 1 & 2.
2. Remove hub paint by dry media blasting.
3. Refer to Figure 62-5. If required, polish surfaces using 320-grit or finer wet-or-dry aluminum oxide abrasive paper to 0.25 inch minimum blend radius.
    a. Visually inspect hub bearing bores and verify no scoring, scratches, or other obvious damage. Polish out fretting or corrosion to 0.002 inch maximum depth on inner and outer surfaces within 2.125 inches of bearing bores. Polish out fretting or corrosion to 0.001 inch maximum depth on inside of bearing bores; maximum bearing bore diameter is 1.5618 inches.
    b. Visually inspect all other areas of hub for obvious damage. Polish out nicks, scratches, gouges, or corrosion to 0.010 inch maximum depth within 0.30 inch of inside and outside edges of hub. Polish out nicks, scratches, gouges, or corrosion to 0.060 inch maximum depth on all other areas.
4. Fluorescent penetrant inspect hub per § 20-42.
5. Prime hub per § 20-60.
6. Install bearings per § 62-21 steps 4 & 5.
7. Mask bearings and topcoat hub assembly per § 20-60.
8. When top coat has sufficiently cured, remove masking.

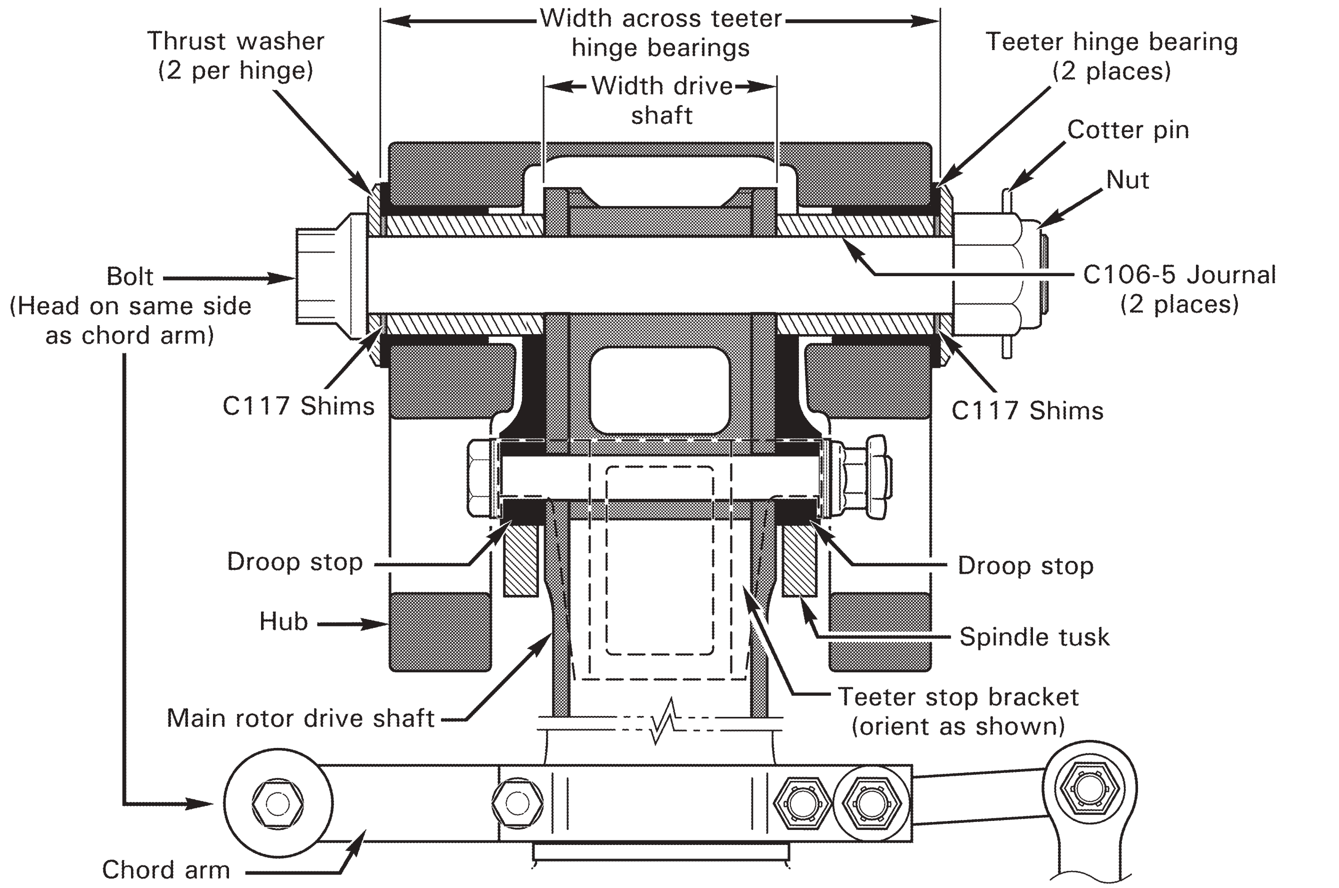

FIGURE 62-6A TEETER HINGE (HUB INSTALLATION)

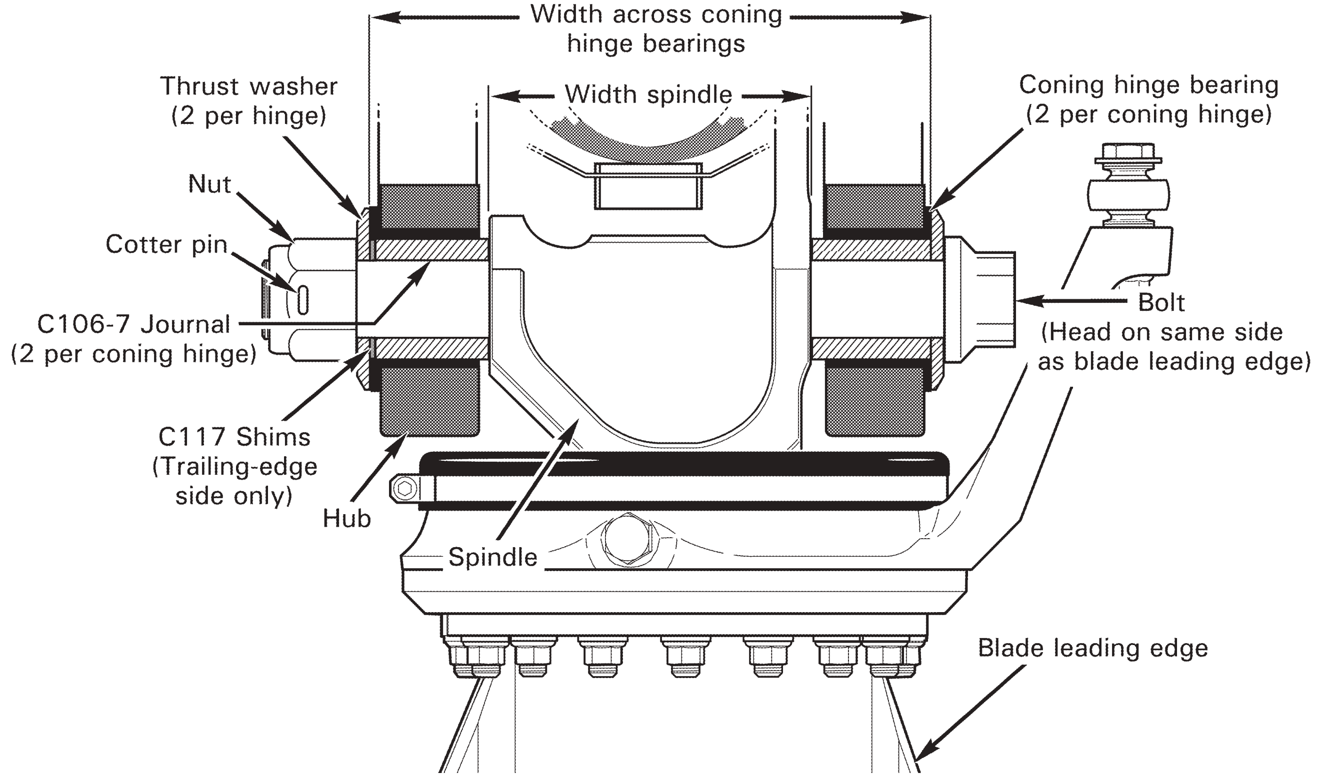

FIGURE 62-6B CONING HINGE (BLADE INSTALLATION)

62-30 Main Rotor Assembly

62-31 Journal and Shim Calculations

Refer to Figures 62-6A and 62-6B.

A. Teeter Hinge Calculation

1. Measure main rotor hub width across the teeter hinge bearing faces: _______ in.
2. Subtract measured width of C251 driveshaft at teeter hinge bolt hole: – _______ in.

   Calculated empty space: = _______ in.
3. Use one C106-5 journal and a selection of C117 shims to create a combined length of approximately 1.835 inches. Use as many different size shims as possible. Place thrust washer, shims, and journal under teeter bolt head; shims must be placed between thrust washer and journal.

   Subtract combined measured thickness of selected journal and shims: – _______ in.

   Difference: = _______ in.
4. Subtract measured length of C106-5 journal to be used on nut-side: – _______ in.

   Difference: = _______ in.

> **CAUTION**
>
> Initial teeter hinge hardware stack-up must be adjusted to 0.005/0.008 inch greater than calculated empty space. A smaller initial stack-up could damage thrust washers and hub bearings during installation.

5. To accommodate dimensional change due to clamping force, add: + 0.005/ 0.008 in.

   Initial C117 shim stack between nut-side journal & thrust washer: = / in.
6. Adjust shim stack as required to meet teeter hinge friction requirements (5–20 ft-lb; 8–12 ft-lb is ideal). Use as many different size shims as possible to facilitate head shifting during balancing.

62-31 Journal and Shim Calculations (continued)

B. Coning Hinge Calculation

1. Measure main rotor hub width across the coning hinge bearing faces: _______ in.
2. Subtract measured width of blade spindle at coning hinge bolt hole: – _______ in.

Calculated empty space: = _______ in.

> **CAUTION**
>
> Initial coning hinge hardware stack-up must be adjusted to 0.012/0.016 inch greater than calculated empty space. A smaller initial stack-up could damage thrust washers and hub bearings during installation.

3. To accommodate dimensional change due to clamping force, add: + 0.012/0.016 in.

Sum: = / in.

4. Subtract combined measured length of both C106-7 journals to be installed: – _______ in.

Initial C117 shim stack between trailing-edge journal & thrust washer: = _______ in.

5. Adjust shim stack as required to meet coning hinge axial gap requirement per Figure 62-7A and to maintain teeter friction requirement as follows: It must be possible to manually cone each blade without teetering the hub when blades are held up off the droop stops and lifted at tip. Increasing shim stack-up decreases hinge friction.

C106 Journal Lengths		
Part No.	Length	Location
C106-5	1.775	Teeter hinge (two per hinge)
C106-7	1.284	Coning hinge (two per hinge)

C117 Shim Sizes		
Part No.	Thickness	Location (Between thrust washer and journal)
C117-8	0.012	Teeter hinge; Coning hinge trailing-edge side
C117-9	0.015	Teeter hinge; Coning hinge trailing-edge side
C117-10	0.020	Teeter hinge; Coning hinge trailing-edge side
C117-11	0.025	Teeter hinge; Coning hinge trailing-edge side

TABLE 62-1 HINGE FRICTION JOURNALS AND SHIMS
(Journal length and shim thickness values given in inches)

Intentionally Blank

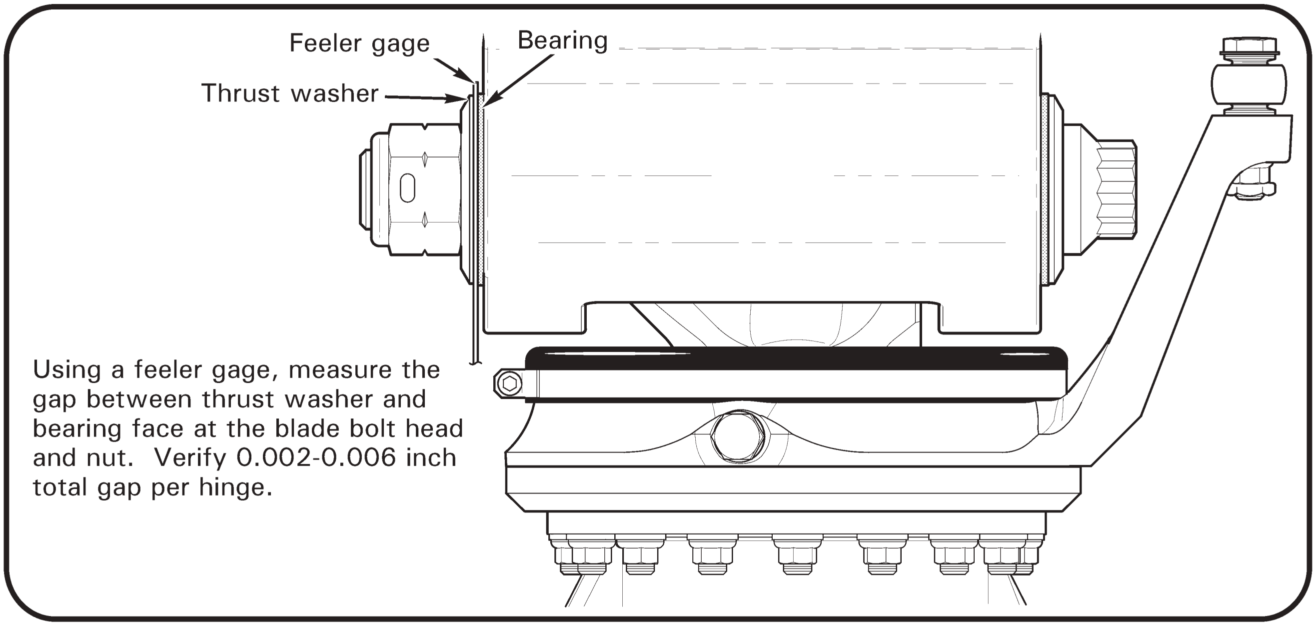

FIGURE 62-7A MEASURING CONING HINGE AXIAL CLEARANCE

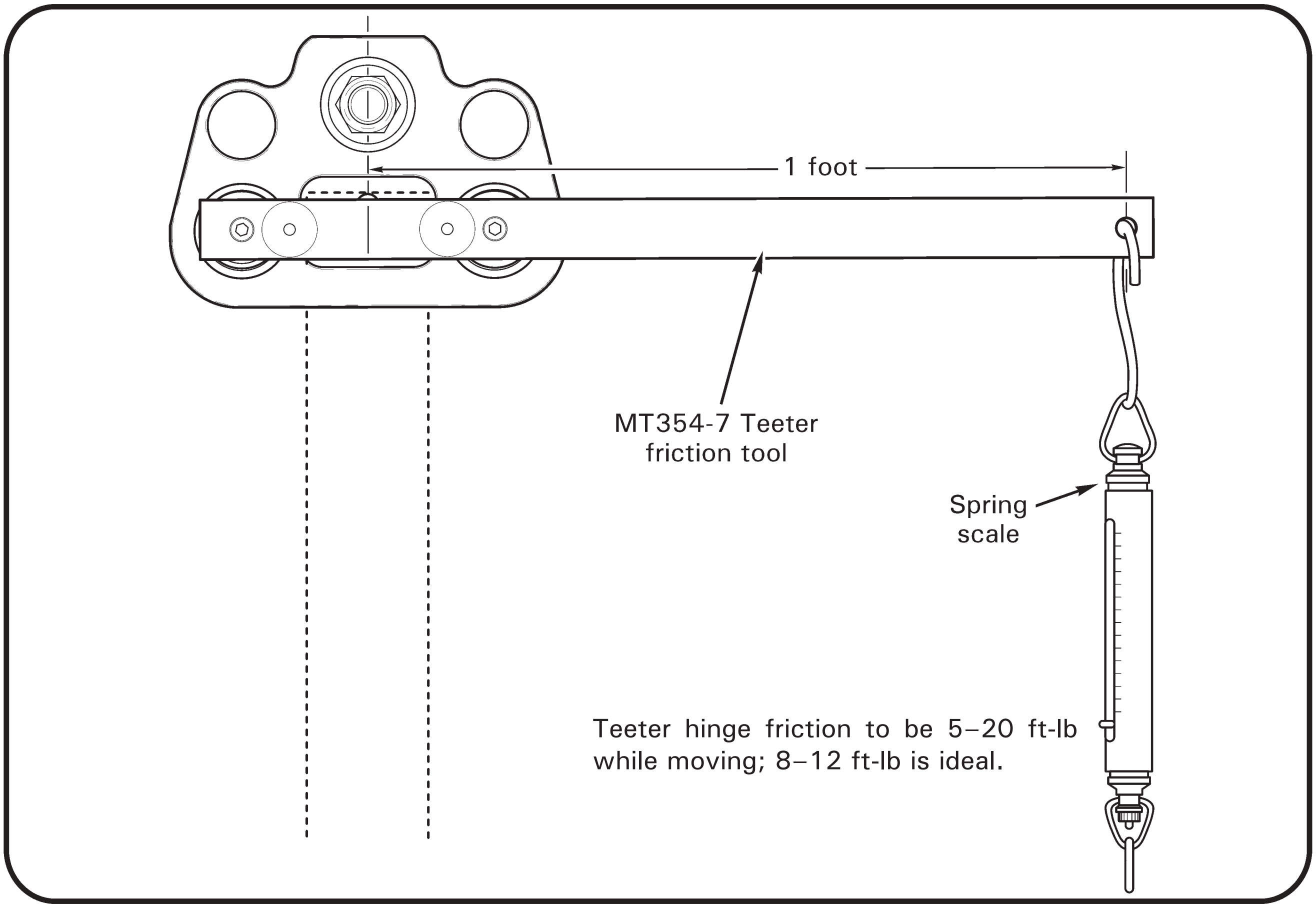

FIGURE 62-7B MEASURING TEETER HINGE FRICTION

62-32 Adjusting Hinge Friction

A. Teeter Hinge Friction Adjustment

1. Remove main rotor blades per § 62-10.
2. Refer to Figure 62-6A and Table 62-1. Remove cotter pin, nut, thrust washer, and nut-side C117 shims. Adjust teeter hinge friction by changing nut-side shim stack thickness in small increments; reducing shim stack thickness increases friction, increasing shim stack thickness reduces friction. Install shims, thrust washer, and nut.
3. While stretching teeter hinge bolt, check teeter hinge friction frequently per Figure 62-7B. To check friction, install MT354-7 teeter friction tool into coning hinge bearings on one side of main rotor hub and measure lowest moving force (not breakaway force) required to teeter main rotor hub with a spring scale.

> NOTE
>
> Do not exceed 20 ft-lb teeter friction. If bolt cannot be stretched without exceeding friction limit, increase shim stack thickness per step 2.

4. Install a new bolt and nut per § 62-20.

B. Coning Hinge Friction Adjustment

1. Refer to Figure 62-6B and Table 62-1. Remove cotter pin, nut, thrust washer, and nut-side C117 shims. Adjust coning hinge axial clearance by changing nut-side shim stack thickness in small increments; reducing shim stack thickness decreases axial clearance, increasing shim stack thickness increases axial clearance. Install shims, thrust washer, and nut.
2. Install a new bolt and nut per § 62-10, steps 5 thru 9. Repeat steps for opposite blade, as required.
3. Check coning hinge friction by lifting blade tips until spindle tusks clear droop stops. Hold one blade level and cone opposite blade. Rotor hub must not teeter as blade is coned. Repeat check on opposite blade.
4. Using a feeler gage, measure gap between thrust washers and bearing faces at coning hinge bolt head and nut. Verify 0.002–0.006 inch total gap per hinge.
5. If not previously accomplished; drill nut and bolt per § 62-35. Install a new cotter pin wet with approved primer.

62-33 Shifting the Main Rotor Hub

1. Remove cotter pin, nut, thrust washer, and nut-side C117 shims.
2. Have two people cone the main rotor blades. Push out teeter hinge bolt with another bolt.
3. Move or exchange existing shims from one side of hub to the other as indicated by main rotor balance chart (refer to § 18-10).
4. Install teeter hinge bolt per § 62-20.

62-34 Drilling Main Rotor Hub Bolts

New bolts and nuts must be installed and bolts stretched to § 20-33 limits prior to drilling. Nuts have three blind holes pre-drilled into every other nut flat to be used as drilling guides.

Using a six inch long 0.156-inch diameter Cobalt twist-drill, drill a hole through nut and bolt using an accessible pre-drilled hole in nut. If a shorter length drill is used, protect hub from damage due to chuck contact by wrapping chuck and/or covering hub edge with several layers of tape. Prevent chips from contaminating other mechanisms.

NOTE

If none of the predrilled holes in nut are accessible for use as a guide after stretching bolt, loosen nut and reposition bolt and nut. Restretch bolt per § 20-33.

CAUTION

Due to loss of cross-sectional area, drilling a second hole thru main rotor hub bolts is prohibited.

Intentionally Blank

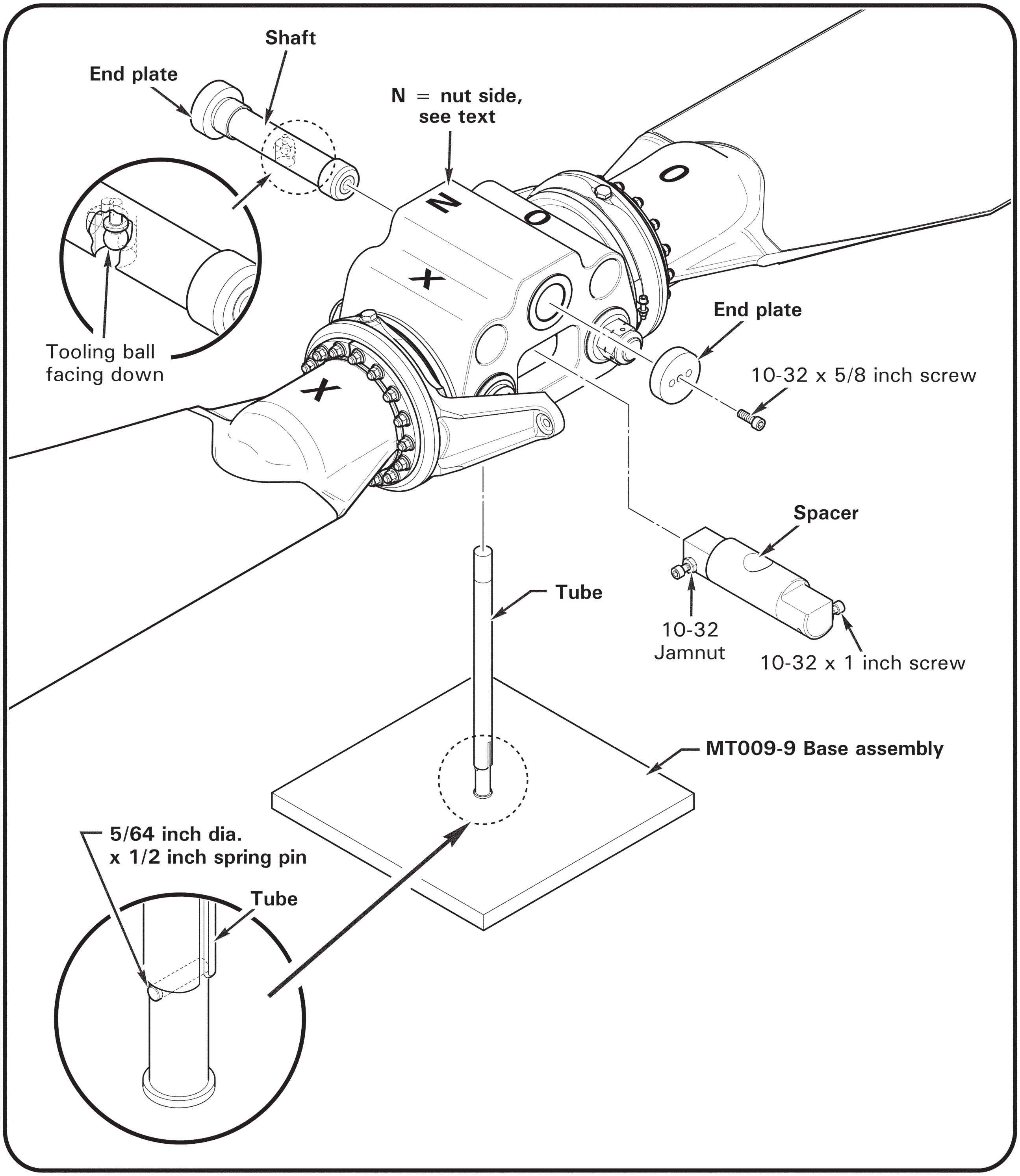

FIGURE 62-8A MT524-2 MAIN ROTOR STATIC BALANCE COMPONENTS ASSEMBLY INSTALLATION
[MT524-2 components assembly includes: (2) end plates, shaft, spacer, and screws.]

62-35 Static Balance

> **CAUTION**
>
> Ensure surfaces contacting blade skins and trailing edges are sufficiently cushioned to prevent blade damage.

1. Refer to § 62-31 Part B and Table 62-1. Assemble main rotor blade & spindle assemblies to main rotor hub by selecting a combination of C106-7 coning hinge journals and C117 coning hinge shims to obtain correct axial clearance.
2. Install nuts on hinge bolts dry and tighten just enough to prevent thrust washer rotation with fingers. Ensure total axial clearance at both blade hinges is on trailing-edge side only; push on blade(s) leading edge as required to move blade aft within hub.
3. Refer to Figure 62-8A. Install shaft in hub teeter-hinge bearings approximately centered, tooling ball facing down. Install screws securing (2) end plates on shaft finger tight.
4. Have a second person raise one blade tip. Insert spacer thru hub opening below shaft on leading edge side of raised blade and adjust screws as required to keep spacer parallel with shaft. Slowly lower raised blade while ensuring spacer is properly seated between spindle tusks and hub.
5. Hoist main rotor assembly sufficiently to position MT009-9 base assembly under hub. Lift & guide tube through spacer and into shaft, then slowly lower rotor assembly onto base assembly. Rest tube on spring pin.
6. Refer to Figure 62-8B. Adjust pitch horns to dimension shown and verify blade pitch angles are approximately equal. If blade pitch angles are not equal, then pitch horn(s) are not correctly installed.
7. Place a spirit level chordwise atop main rotor hub parallel with hinge bolts. Rotate tube so slots align with spring pin and lower tube onto base plate. Level rotor assembly chordwise by adjusting screws in end plates, but do not overtighten screws.
8. Refer to Figure 62-8B. Insert depth micrometer (or depth gauge) thru either hole of end plate; measure depth from end plate to shaft, repeat on opposite side of hub. Determine side of hub with smaller measured distance and mark top of hub with letter "N" to indicate nut-side of teeter hinge bolt.
9. Place a spirit level spanwise atop main rotor hub perpendicular to hinge bolts. Place tip cover, tip cover attach screws, and two A722-4 screws atop blade as close to tip as possible. Level rotor system by adding C298 balance strips, NAS1149F0332P washers, and/or NAS1149F0363P washers as required. Final spanwise balance to be within one NAS1149F0332P washer.
10. Apply light coat A257-9 anti-seize to screw threads and secure tip weights in blade tips; special torque screws to 40 in.-lb. Apply light coat A257-9 anti-seize to screw threads and secure tip covers to blades; special torque screws to 40 in.-lb. Recheck spanwise and chordwise balance; adjust as required.
11. Conspicuously mark rotor assembly with colored "X" and "O" on hub, blade roots, and coning bolts (consistent marking on each side of hub) as reference for correct assembly on helicopter. Disassemble main rotor assembly.

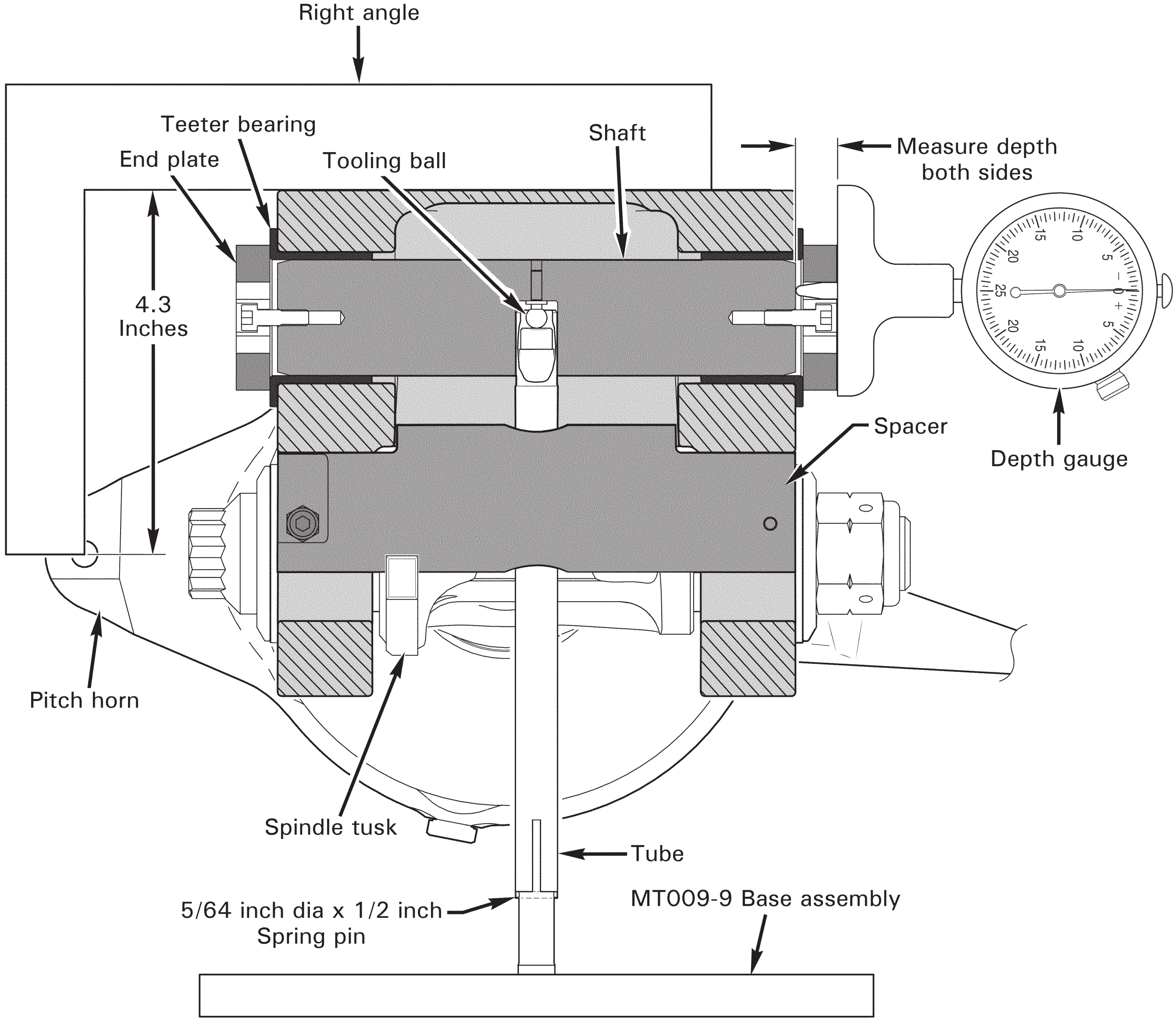

FIGURE 62-8B MEASURING GAP BETWEEN THRUST WASHER AND HUB BEARING

Intentionally Blank

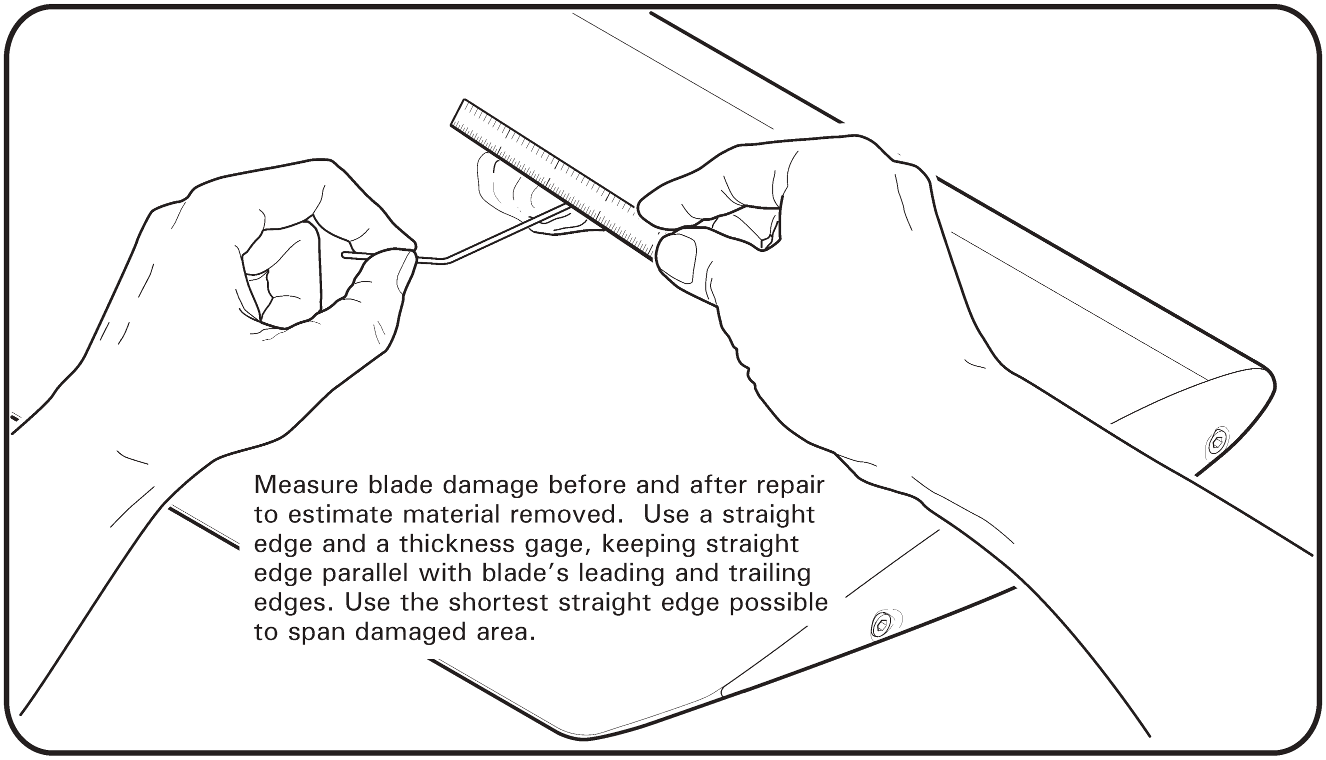

FIGURE 62-9 MEASURING MAIN ROTOR BLADE DAMAGE

62-40 Inspection of Main Rotor Blades

NOTE

Main rotor blades are 14 CFR § 27.602 critical parts. Notify RHC Technical Support when voids exceeding the limits specified in the instructions below are found, providing blade serial number, helicopter serial number, time in service for the rotor blade, and location and size of the voids that exceed the limits.

NOTE

The inspection criteria in this section applies to blade damage that occurs after blade manufacturing (including shipping and handling and time in service). Damage after blade manufacturing usually exhibits paint scuffing, scratches, or freshly-exposed metal in the form of scratches in the finish. If a blade manufacturing irregularity is suspected, contact RHC Technical Support.

CAUTION

A blade may be repaired more than one time. However, in no case can more than the maximum material be removed or the maximum dent depth be exceeded in any one location.

62-40 Inspection of Main Rotor Blades (continued)

A. Measuring Damage

1. Refer to Figure 62-9. Measure blade damage using a straight edge and a thickness gage. Keep straight edge parallel with the leading and trailing edges.
2. If blades are installed on the helicopter, measure damage using the shortest straight edge possible to span damaged area. Using a straight edge of excessive length will cause a false reading due to natural droop of the blade.

B. Measuring Material Removed After Repair

1. Use calipers or micrometers and compare measurements before and after repair to estimate amount of material removed.
2. Use a straight edge and thickness gage to measure repaired areas less than 2 inches across in the blade skins and spar.

62-41 Scratches and Corrosion

A. Skins and Doublers

1. Refer to § 62-50 for repair procedures. Polish out damage by hand with a 0.10 inch minimum blend radius.
2. Refer to § 62-40 for measuring damage and measuring material removed after repair. Repair may not exceed the following limits:
   a. 3.0 inch maximum diameter.
   b. 3.0 inch minimum distance from another repaired area.
   c. 0.012 inch maximum depth between RS 174.0 and RS 198.0.
   d. 0.008 inch maximum depth between RS 18.7 and RS 174.0.
3. When recording repair(s), indicate upper or lower blade surface, diameter, depth, and rotor station location (span and chord).

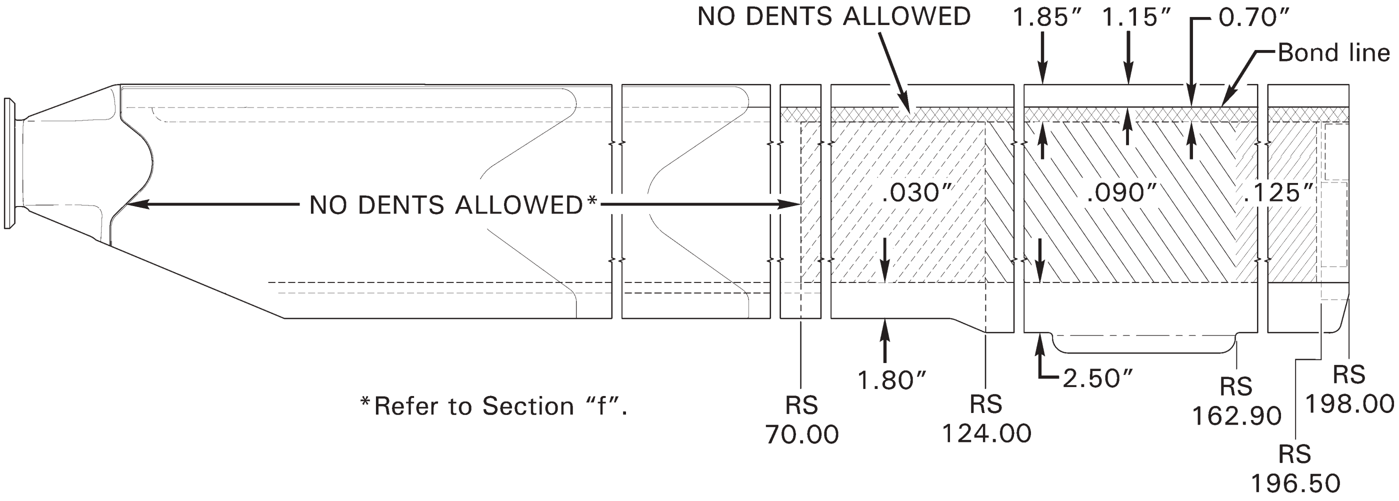

FIGURE 62-11 DENTS ON SKINS AND DOUBLERS – DAMAGE LIMITS (TOP AND BOTTOM OF BLADE)

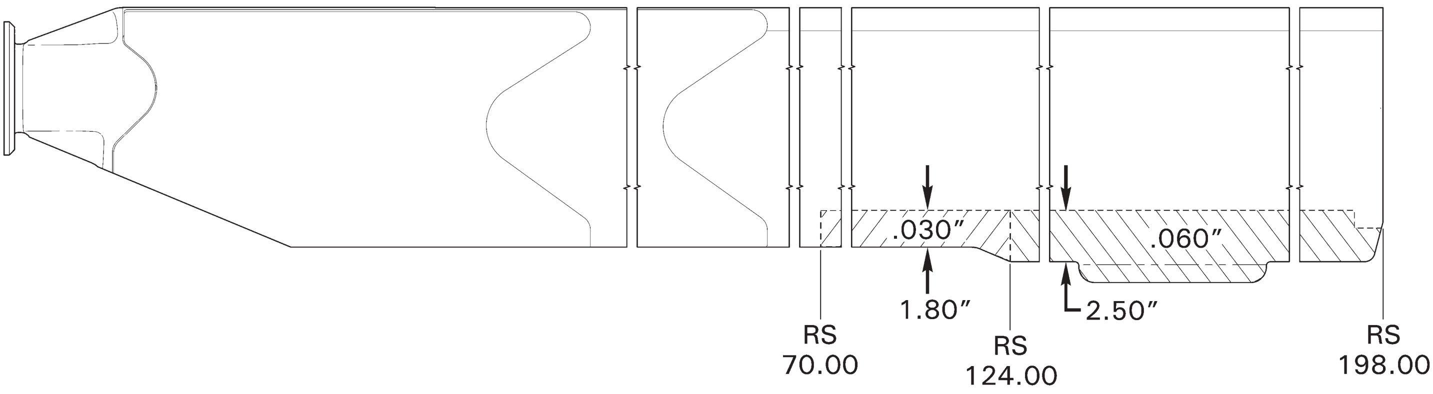

FIGURE 62-12 DENTS ON TRAILING EDGE BOND JOINTS – DAMAGE LIMITS (TOP AND BOTTOM OF BLADE)

62-42 Dents

CAUTION

Tap-test dented areas in honeycomb. If any voids are found associated with dents, contact RHC Customer Service.

Tap-test voids, debonds, and dents in blades using an AN970-4 washer or 1965 or later U.S. quarter dollar coin in good condition.

CAUTION

When dented areas are found, inspect opposite side of the blade for a bulge. Replace blade with a bulge greater than 0.010 inch opposite a dent.

62-42 Dents (continued)

CAUTION

Do not repair any dent that has a sharp cut or break in the skin. If necessary, locally penetrant inspect, keeping penetrant materials away from bond joints.

A. Skins and Doublers

1. Refer to Figure 62-11. Smooth, round bottom dents with 0.060 inch minimum radius that occur in honeycomb and unsupported areas of the blade as listed below may be repaired when damage does not exceed the following limits:

   a. 0.125 inch maximum depth dent between RS 162.90 and RS 196.50
   b. 0.090 inch maximum depth dent between RS 124.00 and RS 162.90.
   c. 0.030 inch maximum depth dent between RS 70.00 and RS 124.00.
   d. Maximum area of any dent or dents is 12 square inches and maximum length is 2.0 inches between RS 70.00 and RS 162.90.
   e. Maximum area of any dent or dents is 24 square inches and maximum length is 4.0 inches between RS 162.90 and RS 196.50.
   f. Replace blade with any dent in 0.7 inch area immediately aft of skin-to-spar bond line.
   g. For dents in skins and/or doublers inboard of RS 70.00, contact RHC for repair procedures.

2. Refer to Part C for leading edge cap damage. Refer to § 62-50 for repair procedures for damage within limits.

B. Trailing Edge Bond Joints

1. Refer to Figure 62-12. Verify damage does not result in an edge void and does not exceed the following limits:

   a. 0.030 inch maximum damage between RS 70.00 and RS 124.00.
   b. 0.060 inch maximum damage between RS 124.00 and 198.00.
   c. Refer to Part A, step 1(d).

2. Refer to § 62-50 for repair procedures for damage within limits. Blend out dents in trailing edge bond joints with a 0.10 inch blend radius.

C. Leading Edge Cap

1. Verify damage does not result in a crack or tear and dent depth does not exceed 0.020 inch.

2. Dents do not require blending or filling. Dents may be blended with a 0.10 blend radius.

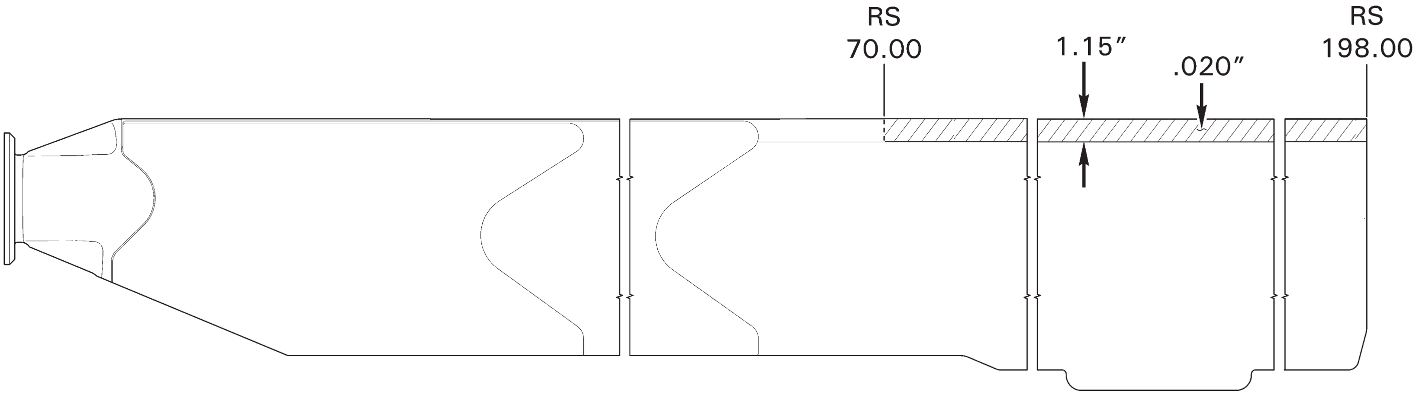

FIGURE 62-13 SPAR DAMAGE

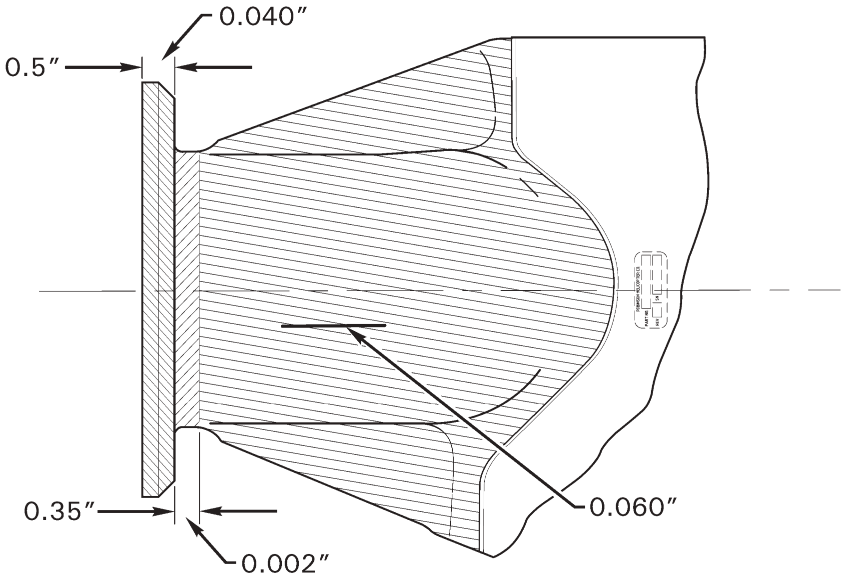

FIGURE 62-14 ROOT FITTING DAMAGE

62-43 Spar Damage

1. Refer to Figure 62-13. Spar damage limits exclude leading edge cap. Verify damage does not exceed the following limits:
   a. 0.020 inch maximum depth between RS 70.00 and RS 198.00.
   b. Replace blade if erosion has reduced thickness at spar leading edge to 0.040 inch.
   c. Replace blade if erosion has cause ripples in or deformation to spar leading edge.
2. Refer to § 62-50 for repair procedures for damage within limits. Blend out spar damage with a minimum 1.0 inch blend radius.

62-44 Root Fitting Damage

1. Refer to Figure 62-14. Verify damage does not exceed the following limits:

   a. 0.040 inch maximum depth on outside diameter of flange.
   b. 0.002 inch maximum depth on area 0.35 inch outboard of flange.
   c. 0.060 inch maximum depth on other root fitting exposed areas.

2. Refer to § 62-50 for repair procedures for damage within limits. Blend out root fitting damage with a minimum 1.0 inch blend radius.

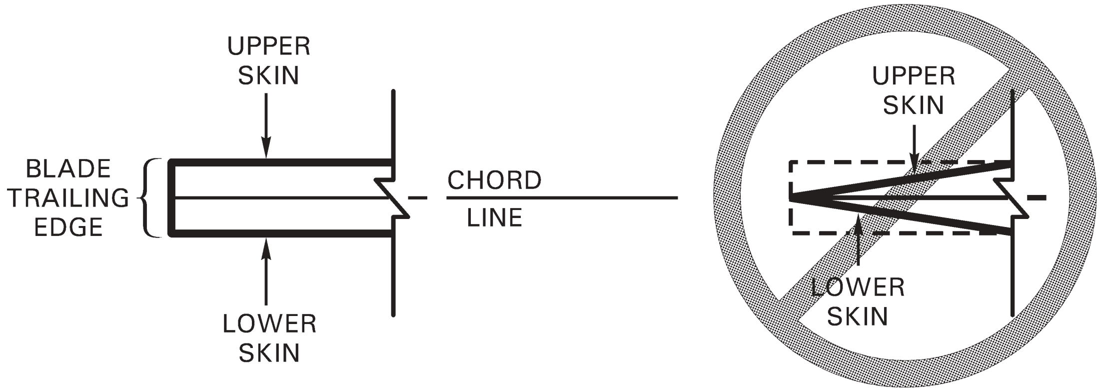

FIGURE 62-15 REPAIRS TO BLADE AND TRIM TAB TRAILING EDGES

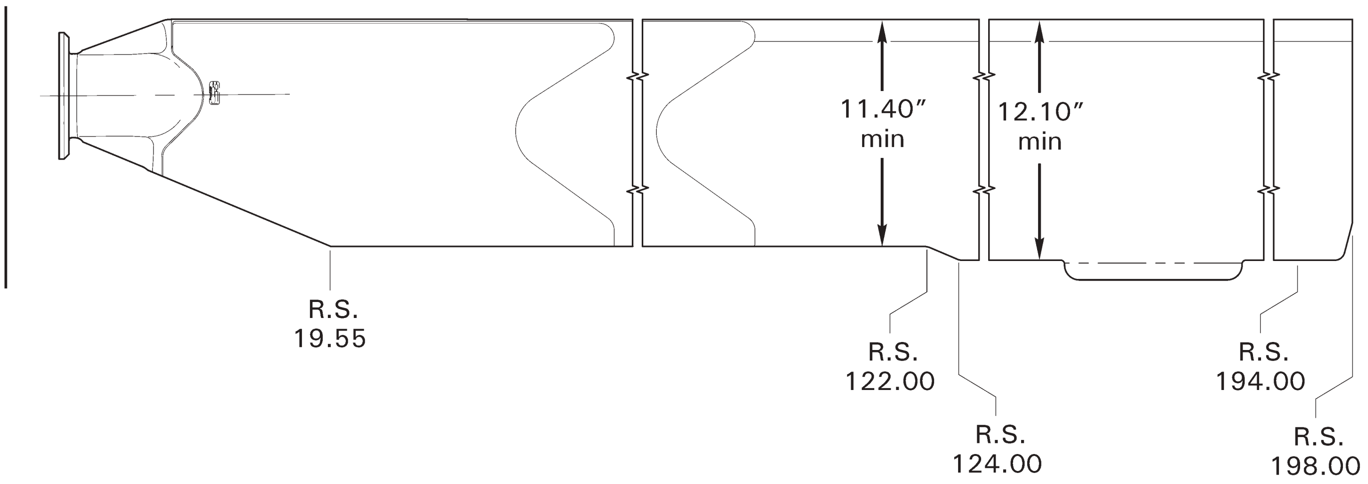

FIGURE 62-16 MINIMUM CHORD AFTER BLADE AND TRIM TAB TRAILING EDGE REPAIRS

62-45 Nicks and Notches

A. Blade Trailing Edge (see also Blade Tip)

1. Refer to Figure 62-15 and § 62-50 for repair procedures for damage within limits. Blend out nicks and notches in blade trailing edge for 1.0 inch minimum each side of nick or notch (with a minimum 12 inch blend radius).
2. Refer to Figure 62-16. After repair, verify minimum chord is within the following limits:
   a. 12.10 inch minimum chord between RS 124.00 and RS 194.00.
   b. 11.40 inch minimum chord between RS 19.55 and RS 122.00.
3. See § 62-42 for additional inspection criteria.

B. Blade Tip

1. Refer to Figure 62-17. Using a fine-toothed hand file, file in spanwise or chordwise direction, within limits indicated. Remove file marks using 220 grit or finer aluminum oxide abrasive paper.
2. File trailing edge to maintain square edge at skins, perpendicular to chord line, per Figure 62-15. Seal exposed trailing edge bond joint.
3. Track and Balance Main Rotor per Chapter 18.

C. Trim Tab Trailing Edge

1. Verify damage does not exceed 0.050 inch chordwise or 0.30 inch spanwise.
2. Refer to Figure 62-15 and § 62-50 for repair procedures for damage within limits. Blend out nicks & notches in trim tab trailing edges, 1.0 inch minimum each side of nick or notch (with a minimum 12 inch blend radius) keeping edge parallel with blade trailing edge.

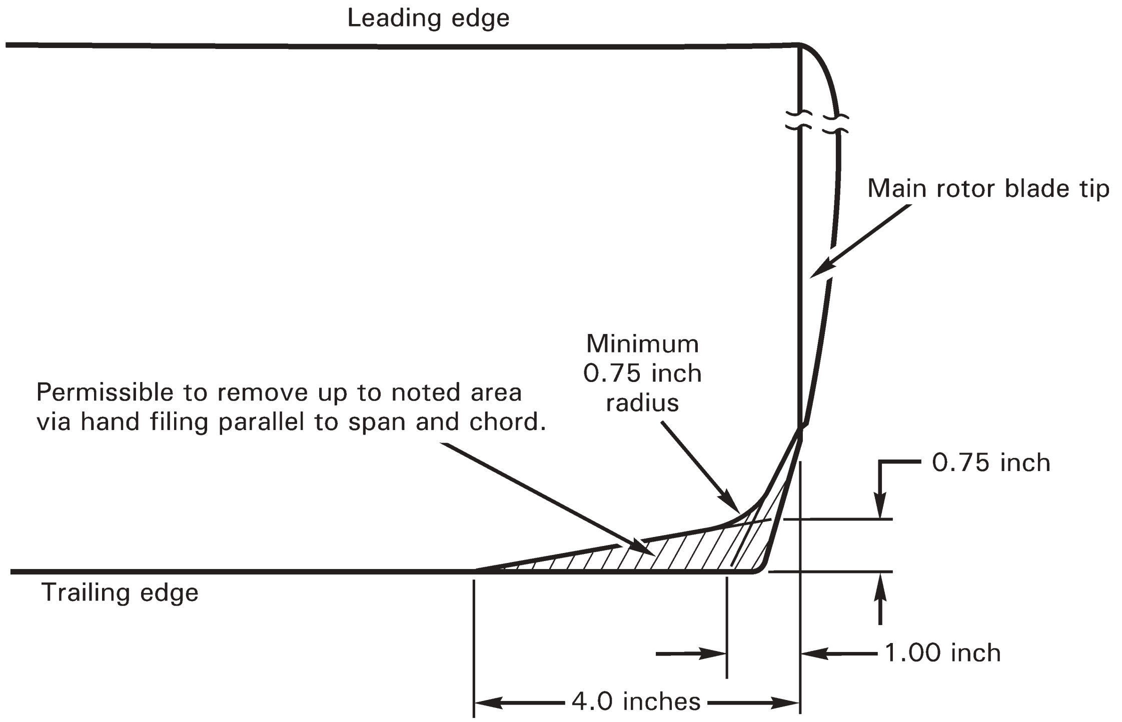

FIGURE 62-17 BLADE TIP REPAIR LIMITS

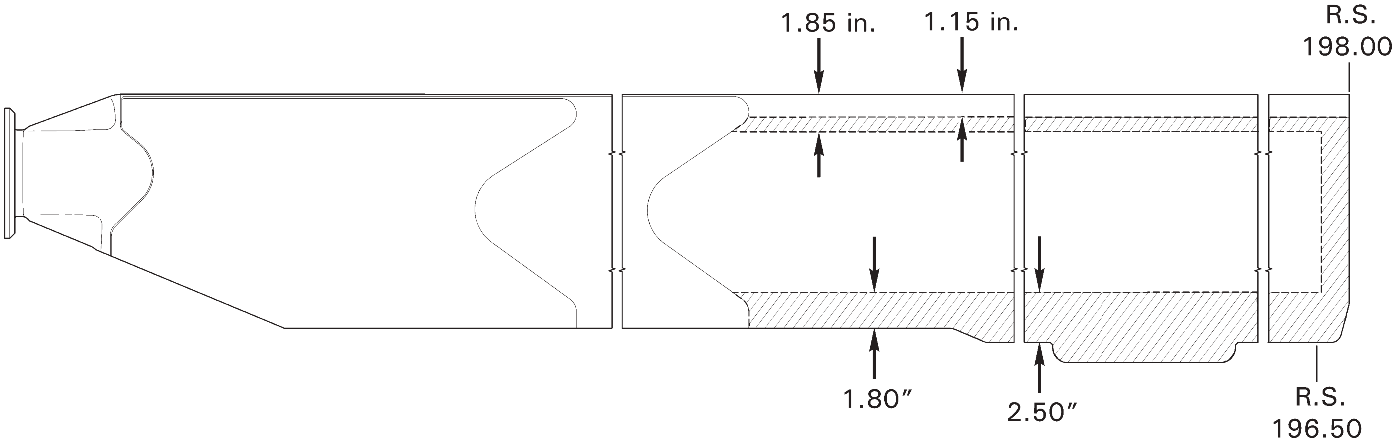

FIGURE 62-18 TIP CAP, SPAR, AND TRAILING EDGES - VOID AND DEBOND LIMITS

62-46 Voids and Debonds

WARNING

Voids or debonds in rotor blades are not field repairable. Notify RHC Technical Support when voids exceeding the limits specified in the instructions below are found, providing blade serial number, helicopter serial number, time in service for the rotor blade, and location and size of the voids that exceed the limits.

CAUTION

Tap-test voids and debonds in blades using an AN970-4 washer or 1965-or-later U.S. quarter dollar coin in good condition.

A. Tip Caps, Spars, and Trailing Edges

1. Refer to Figure 62-18. Verify no continuous void larger than 0.10 square inch. 90% of the area must be securely bonded. Voids separated by 0.25 inch or less spanwise are considered continuous.

B. Doublers

1. Refer to Figure 62-19. Voids or debonds in doublers are not field-repairable.
   a. Critical Areas: Area less than 0.50 inch spanwise and less than 0.30 inch chordwise from edge of doubler. Verify no individual void larger than 0.10 square inch except at the doubler finger tips. The finger tips may be debonded from the outboard tip to 1.0 inch inboard. Voids that are separated by less than 0.25 inch shall be considered continuous.
   b. Non-Critical Areas: Area more than .50 inch spanwise or more than .30 inch chordwise from doubler edges. Verify void does not exceed 2.0 inches chordwise by 7.0 inches spanwise maximum continuous void. Voids that are separated by less than 0.25 inch shall be considered continuous. Total area of any void may not exceed 6.0 square inches.
2. If voids or debonds are beyond limit, contact RHC Technical Support.

C. Honeycomb

1. Refer to Figure 62-20. Verify damage does not exceed the following limits:
   a. 1.50 inch chordwise or 20.00 inch spanwise maximum continuous void between RS 121.00 & inboard. Total area of any void may not exceed 15.0 square inches.
   b. 2.50 inch chordwise or 20.00 inch spanwise maximum continuous void between RS 121.00 & RS 196.50. Total area of any void may not exceed 15.0 square inches.

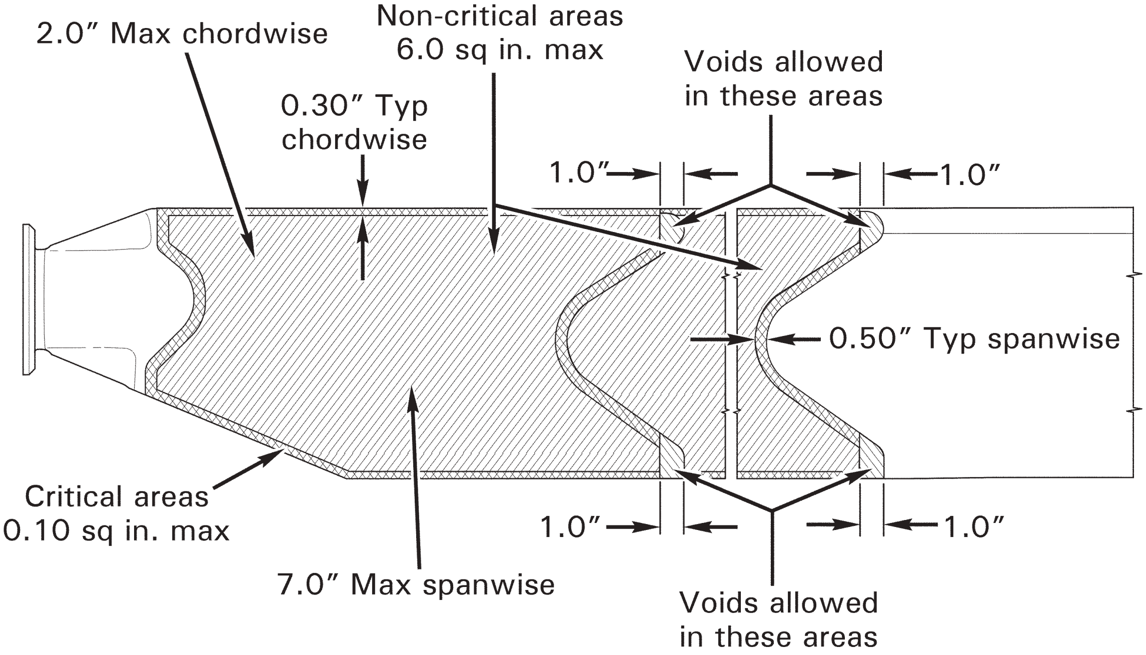

FIGURE 62-19 DOUBLERS - VOID AND DEBOND LIMITS

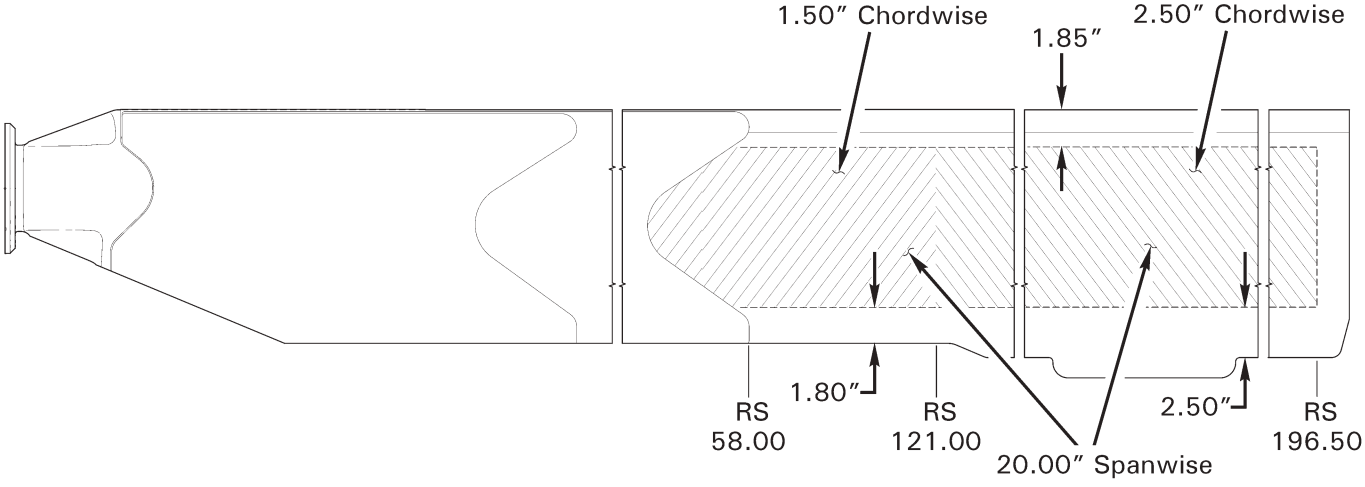

FIGURE 62-20 HONEYCOMB - VOID AND DEBOND LIMITS

62-50 Repair of Main Rotor Blades

WARNING

Unauthorized repairs to rotor blades have caused fatal crashes.

CAUTION

Do NOT use power tools, chemical paint strippers, or chemical corrosion removers to repair main rotor blades.

NOTE

Refer to § 20-70 for approved materials.

1. Measure damage per § 62-40.
2. Polish out blade damage using 220 grit or finer wet-or-dry aluminum-oxide abrasive paper, and finish with 320 grit or finer wet-or-dry abrasive paper. Hand-sand in spanwise direction.
3. A fine-toothed file may be used along the spar and trailing edge, provided the area is finished with 320 grit or finer wet-or-dry abrasive paper. Hand-sand or file in spanwise direction.
4. Remove only the material necessary to reach the bottom of the damage, and to blend the reworked area to the radius or dimension required. Visually inspect and verify all damage is removed.
5. Measure reworked area and verify material removed and/or new chord dimension is permissible per § 62-40.
6. Seal and fill per § 62-51, as required. Paint per § 62-52, as required.
7. Track and balance main rotor per Chapter 18, as required.

62-51 Sealing, Filling, and Fairing

1. Clean area needing sealing, filling, and fairing with QSOL 220.
2. a. Apply B270-27 adhesive to seal all exposed bond joints except at tip of blade and 4–6 inches of outboard end of skin/spar joint; remove excess adhesive.

   b. Apply B270-1 sealant to seal tip of blade and 4–6 inches of outboard end of skin/spar joint; remove excess sealant. Cure for 2–3 hours at 125° ± 25° or air dry for 72 hours minimum.
3. Using 240 grit or finer wet-or-dry aluminum-oxide abrasive paper, hand-sand cured adhesive in spanwise direction to a smooth, aerodynamic finish, congruent with the blade airfoil. Do not remove metal.
4. Hand-sand surrounding painted surface until 25% primer remains. Keep bare metal to a minimum.

62-52 Painting

> **CAUTION**
>
> If force-drying paint, do not exceed 175°F surface temperature on blade; monitor blade temperature by temporarily installing P/N 110-2 Telatemp on blade skin.

1. Mask area to prevent overspray contamination.
2. Clean bare metal to be painted with a lint-free cloth dampened with enamel cleaner (see Approved Materials, § 20-70).
3. Prime bare metal with at least two coats of epoxy primer. Scuff first coat of primer with 320 grit abrasive paper (or very fine Scotch-Brite), and wipe down with a lint-free cloth dampened with enamel cleaner prior to applying new coat.

> NOTE
>
> Best results are achieved if primer is allowed to air-dry for 12 hours prior to top coat application.

4. Refer to Figure 62-21. Apply dark gray, flat black, white, and/or yellow Dupont Imron polyurethane enamel (or equivalent; see Approved Materials, § 20-70), as required, to primed area in accordance with paint manufacturer's recommendations.

> NOTE
>
> Allow Imron paint to cure at least 72 hours before flying in erosive conditions (such as drizzle, rain, or dust).

5. Remove masking materials.

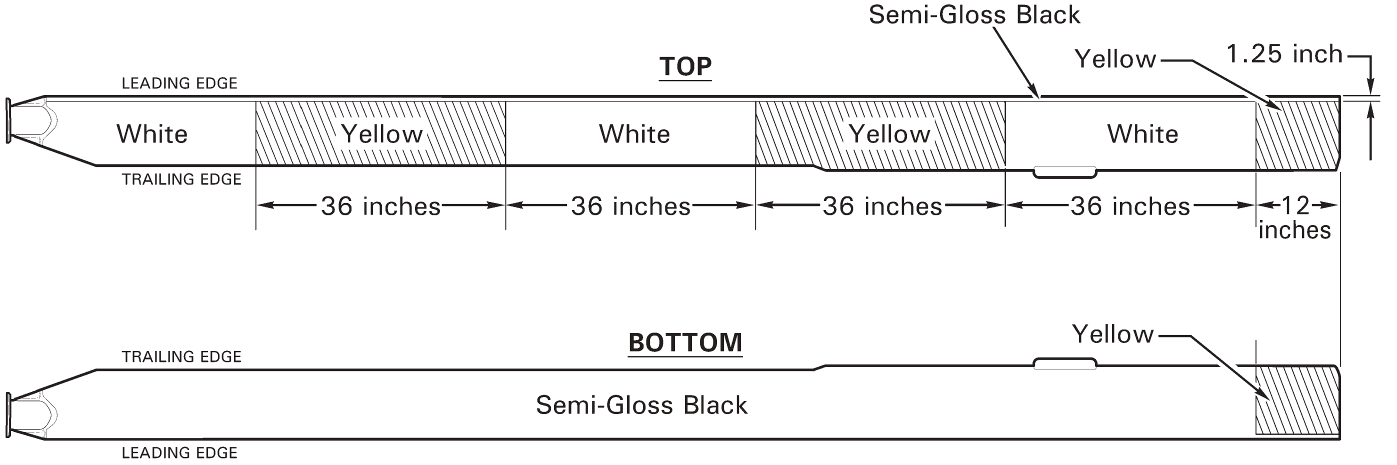

FIGURE 62-21 MAIN ROTOR BLADE PAINT SCHEME

62-60 Main Rotor Blade Tip Maintenance

After removing rounded tip covers, use 10X magnification when visually inspecting blade tip to verify no loose or blistered paint, white-powder corrosion products, or pitting of skins aft of skin-to-spar bond lines (upper & lower). If bare metal (other than spar leading edge) or corrosion is detected, proceed as follows:

WARNING

Review appropriate Safety Data Sheet (SDS) when working in proximity to hazardous materials. Specific recommendations for use of personal protective equipment are located in the SDS.

CAUTION

Do NOT use power tools or chemical paint strippers to remove blade paint.

1. Remove any corrosion and loose paint on tip cap and outboard edges of blade skins by hand-sanding vertical surface in a chordwise direction; use a hard, flat block with 220-grit aluminum-oxide abrasive paper, then finish sand with 320-grit aluminum-oxide abrasive paper. Remove only material necessary to eliminate corrosion.

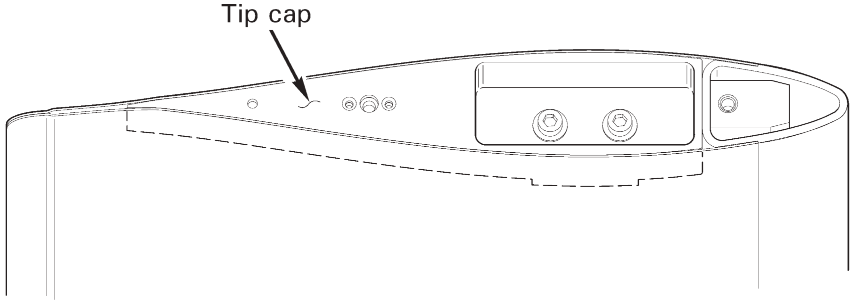

2. Remove any corrosion and loose paint from skins on upper or lower surface of blade, aft of skin-to-spar bond joint, by hand-sanding in a spanwise direction using 220-grit aluminum-oxide abrasive paper and minimum 0.1 inch blend radius; finish sand with 320-grit aluminum-oxide abrasive paper. Remove only material necessary to eliminate corrosion.

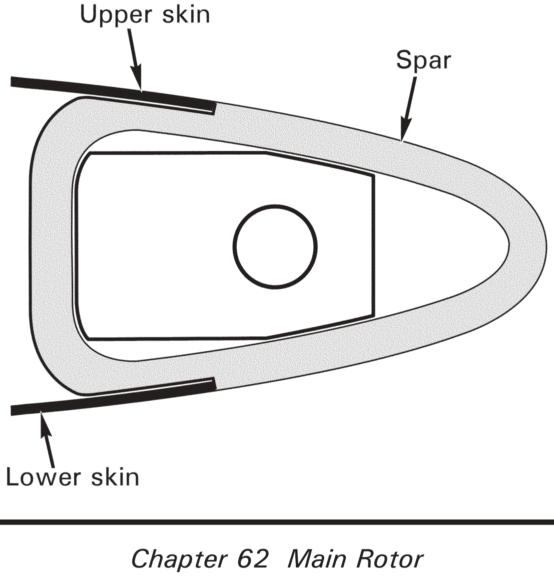

62-60 Main Rotor Blade Tip Maintenance (continued)

3. Clean bare metal area with lint-free cloth dampened with acetone and allow to dry.
4. Seal exposed bond joints, including bond joints on vertical surfaces, with smooth layer of B270-1 sealant (poly-sulfide, refer to § 20-79) and allow to cure.
5. Prime remaining exposed metal with two coats of epoxy primer (chromated epoxy preferred).
6. Apply yellow paint topcoat within 2 – 48 hours of primer application. For best performance, allow paint to cure 48 hours before flight.
7. Install tip covers and special torque screws to 40 in.-lb wet with A257-9 anti-seize; ensure cover edges are flush with blade profile.

CHAPTER 63

MAIN ROTOR DRIVE SYSTEM

Section *Title* *Page*

63-00 Description 63.1
63-10 Engine Shaft Weldment 63.1
63-11 (Engine Driveline) Forward Flex Plate Shimming 63.2
63-12 Clutch Assembly 63.5
63-20 Main Rotor Gearbox Assembly 63.6
63-21 Yoke and Seal Replacement 63.8
63-30 Rotor Brake 63.13
63-31 Pad Replacement 63.14
63-40 Rotor RPM 63.14

Intentionally Blank

CHAPTER 63

MAIN ROTOR DRIVE SYSTEM

63-00 Description

The engine is mounted in a 37° nose-up attitude. A sprag-type overrunning clutch mates directly to the splined engine power take-off (PTO) shaft. The clutch is connected to a shaft with flexible couplings at both ends to transmit power to the main gearbox. A ring and pinion spiral bevel gearset at the main gearbox input reduces speed to tail rotor driveline RPM. A second ring and pinion stage reduces speed from tail rotor driveline RPM to main rotor RPM.

The main gearbox is pressure lubricated. The oil is pumped through an airframe-mounted filter and cooled as required by a thermostatically-controlled oil cooler which receives its airflow from the fanwheel. The main gearbox also drives the flight control hydraulic pump.

63-10 Engine Shaft Weldment

A. Removal

1. Remove tailcone cowling assembly per § 53-23. Remove engine cowling assembly per § 53-21.
2. Remove filter and cage assemblies per § 71-22.
3. Refer to Figure 63-1. Remove hardware securing F453-1 box assembly to F234-1 firewall.
4. Remove hardware securing forward A947-2 flex plate assembly to F910-1 (main gearbox) yoke and F642 (engine) shaft weldment forward flange, noting hardware removed. Remove flex plate, and temporarily suppport forward portion of shaft weldment.
5. Remove hardware securing shaft weldment to aft A947-2 flex plate assembly. Remove support, then remove shaft weldment through main gearbox compartment.

B. Installation

1. Refer to Figure 63-1. Position F642 engine shaft weldment in helicopter, and install hardware securing shaft weldment to aft A947-2 plate assembly. Standard torque nuts and palnuts per § 20-32, and torque stripe per Figure 5-1.
2. Shim engine driveline per § 63-11.
3. Install hardware securing F453-1 box assembly to F234-1 firewall.
4. Verify 0.2 inch minimum clearance between shaft weldment and firewall grommet; verify equal gap concentrically between shaft and box assembly hole edges. Adjust F174-1 support weldment rod ends per § 53-31 as required.
5. Install filter and cage assemblies per § 71-22.
6. Install tailcone cowling assembly per § 53-23. Install engine cowling assembly per § 53-21.

63-11 (Engine Driveline) Forward Flex Plate Shimming

> NOTE
>
> The engine driveline is shimmed for 0.040 / 0.000 inch compressive preload. Preload is alleviated by upward movement of main gearbox during flight.

1. Refer to Figure 53-2. Verify F174-1 support weldment rod end engagement measures 0.93 inch from tube end to rod end centerline (nominal; both sides). Verify 0.2 inch minimum clearance between F642 (engine) shaft weldment and firewall grommet; verify equal gap concentrically between shaft and F453-1 box assembly hole edges. Adjust support weldment rod end engagement per Section 53-31 as required.

2. Refer to Figure 63-1. If not previously accomplished, remove hardware securing forward A947-2 flex plate assembly to F910-1 (main gearbox) yoke and F642 (engine) shaft weldment forward flange. Remove flex plate, and temporarily suppport forward portion of shaft weldment.

3. Measure flex plate thickness at bonded washers (4 places) to determine average thickness:

   (1st place) ______________ inch

   (2nd place) + ______________ inch

   (3rd place) + ______________ inch

   (4th place) + ______________ inch

   Total = ______________ inch

   Total ÷ 4 = ______________ inch **(Flex plate average thickness)**

4. a. Position F910-1 (main gearbox) yoke flange arms and F642 (engine) shaft weldment forward flange arms at 3 o’clock and 9 o’clock positions (horizontal). Measure gap between arms to determine average gap:

   (3 o’clock position) ______________ inch

   (9 o’clock position) + ______________ inch

   Total = ______________ inch

   Total ÷ 2 = ______________ inch **(Average gap between flange arms)**

   b. Rotate F642 (engine) shaft weldment 180º, and repeat step a:

   (3 o’clock position) ______________ inch

   (9 o’clock position) + ______________ inch

   Total = ______________ inch

   Total ÷ 2 = ______________ inch **(Average gap between flange arms)**

63-11 (Engine Driveline) Forward Flex Plate Shimming (continued)

5. Evaluate flange straightness by calculating the difference between the 3 o'clock positions in steps 4a and 4b. Also calculate the difference between the 9 o'clock positions in steps 4a and 4b. If either calculated difference exceeds 0.015 inch, either one or both flanges are bent and require replacement.

6. Using the smaller average gap from step 4a or 4b, subtract the flex plate average thickness determined in step 3:

   Smaller average gap between flange arms (step 4a or 4b) ______________ inch

   Subtract flex plate average thickness (step 3) − ______________ inch

   Total = ______________ inch

7. Select shims per Table 63-1 and install forward A947-2 flex plate assembly. Standard torque hardware per § 20-32 and torque stripe per Figure 5-1. Remove F642 (engine) shaft weldment temporary support.

> **WARNING**
>
> **Shim both arms of flanges equally. All fasteners must meet torque requirements given in § 20-33.**

Calculated Dimension	Shim required between forward A947-2 flex plate and F910-1 (main gearbox) yoke	Shim required between forward A947-2 flex plate and F642 (engine) shaft weldment forward flange
−0.041 inch or greater negative number	NAS1149F0432P washer between aft A947-2 flex plate assembly and F642 (engine) shaft weldment aft flange and/or F018-1 clutch assembly yoke may be relocated under nut as required to achieve −0.040 / 0.000 inch calculated dimension. Relocate washers as required, and repeat steps 4 thru 7.	
−0.040 / 0.000 inch	None	None
+0.001 / +0.029 inch	NAS1149F0432P washer	None
+0.030 / +0.059 inch	NAS1149F0432P washer	NAS1149F0432P washer
+0.060 / +0.090 inch	NAS1149F0463P washer	NAS1149F0432P washer
+0.091 / +0.121 inch	NAS1149F0463P washer	NAS1149F0463P washer
+0.122 inch or greater positive number	NAS1149F0432P washer between aft A947-2 flex plate assembly and F642 (engine) shaft weldment aft flange and/or F018-1 clutch assembly yoke may be exchanged with NAS1149F0463P washer as required to achieve −0.040 / 0.000 inch calculated dimension. Exchange washers as required, and repeat steps 4 thru 7.	

TABLE 63-1

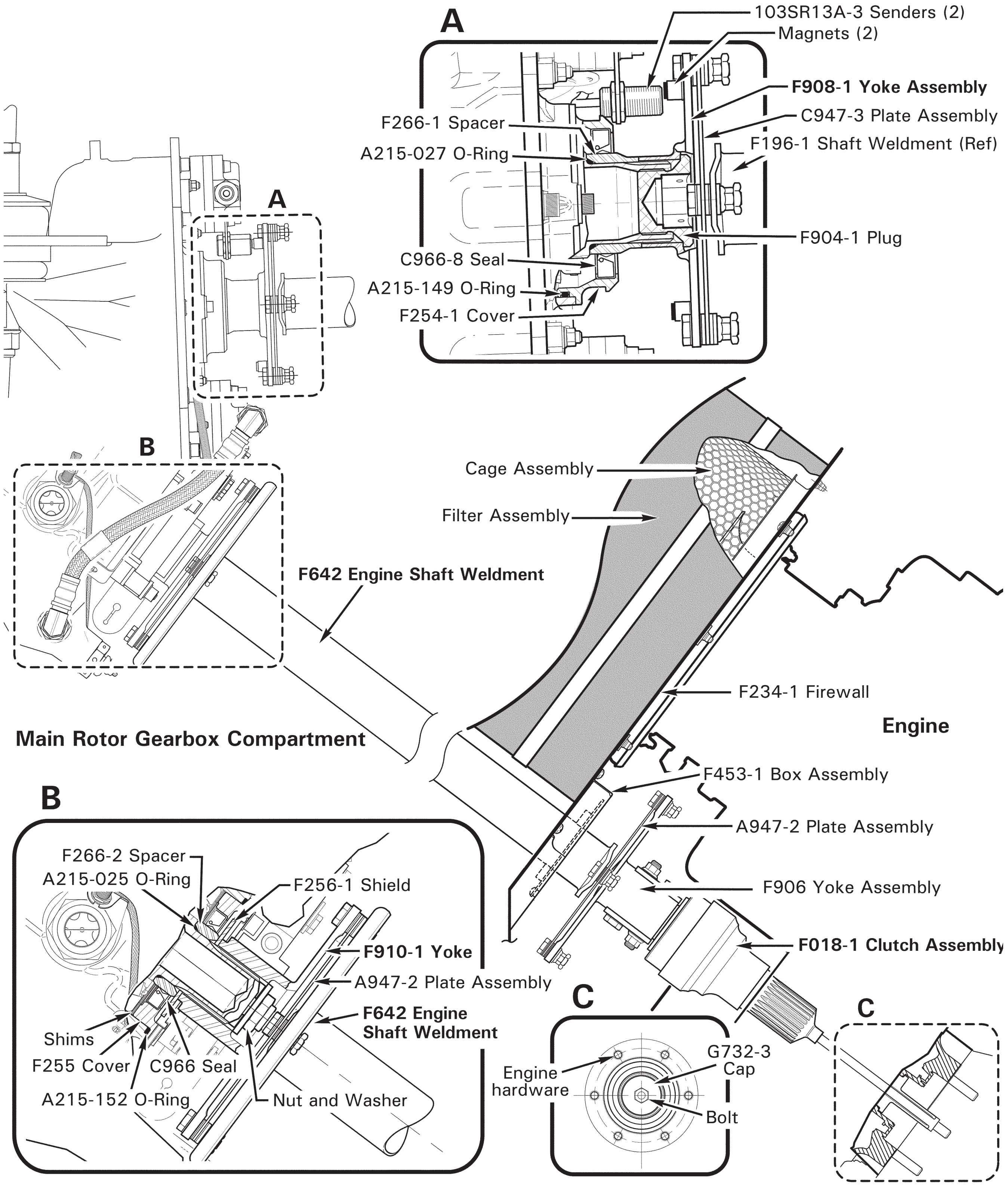

FIGURE 63-1 ENGINE DRIVELINE

63-12 Clutch Assembly

A. Removal

1. Remove engine shaft weldment per § 63-10.
2. Refer to Figure 63-1. Mark F906 yoke assembly and A947-2 plate assembly, to facilitate installation. Remove plate assembly, noting hardware removed.
3. Remove bolt securing G732 cap and spacer (if installed). Remove clutch assembly.

B. Installation

1. Refer to Figure 63-1. Lubricate F018-1 clutch assembly splines and clamping face using A257-1, -9, or -12 before installing.
2. Insert clutch assembly in engine. Install spacer (earlier R66s), G732 cap, and bolt at rear PTO pad. Use bolt to rotate combined clutch-PTO gear and measure runout of clutch housing at largest diameter; runout must not exceed 0.005 inch TIR. Standard torque NAS6604 bolt per § 20-32 or special torque G732-4 bolt per § 20-33 and torque stripe per Figure 5-1.
3. Install A947-2 plate assembly, as noted during removal. Standard torque fasteners per § 20-32, and torque stripe per Figure 5-1.
4. Install engine shaft weldment per § 63-10.

63-20 Main Rotor Gearbox Assembly

A. Removal

1. Remove main rotor blades per § 62-10.
2. Remove tailcone cowling assembly per § 53-23.
3. Disconnect (pitot system) 15-4-N-O union near G201-1 (servo support) frame assembly. Cap fitting and plug line.
4. Refer to Figure 63-1. Remove hardware securing F908-1 and F910-1 yoke assemblies to plate assemblies, leaving plates attached to shaft weldments. Note hardware removed.
5. Place cyclic stick approximately vertical and apply cyclic friction. Fully raise collective stick and apply collective friction. Remove hardware securing F121-7 push-pull tube assembly to F339-1 jackshaft weldment, and remove hardware securing F121-5 push-pull tube assemblies to D212-5 servo assemblies. Fully lower collective stick.
6. Detach cable assembly from (rotor brake assembly) B112-3 spring.
7. Using back-up wrench, disconnect D205-19 and D205-20 hose assemblies from F006-1 main rotor gearbox and D500-3 oil pump. Cap and plug fittings and hoses.
8. Disconnect F059-01 cabin harness assembly plug from F049-01 gearbox harness assembly receptacle. Remove hardware securing A936-3 (ground) wire assembly to F560-1 bulkhead assembly.
9. Remove D277-8 clamp or cut and discard safety wire securing Tygon® tube to G254-1 (fuel) vent assembly, and clear tubing from workspace.
10. Install hoisting equipment per § 7-20, Part A, steps 1 thru 4; remove hoist slack.
11. Remove hardware securing F252-1 strut to F020-1 upper frame assembly. Remove (mounting bolt) nuts and washers securing gearbox to upper frame. Remove aft mounting bolts securing F235-13 strut assemblies to servo support frame, hardware securing struts to upper frame, and struts.
12. Hoist gearbox (with hydraulic installation, servo support frame, and mast fairing assembled) up and away from helicopter.

63-20 Main Rotor Gearbox Assembly (continued)

B. Installation

CAUTION

If F006-1 main gearbox is to be installed in a helicopter equipped with a cargo hook or agricultural sprayer, verify gearbox has B900-12 modification plate adjacent to the gearbox S/N data plate, or has been overhauled (see maintenance records).

1. If installing new C653-3 (aft) or A653-2 (forward) rubber mounts, lubricate mounts using water or A257-8 lubricant and press into gearbox ears.
2. Refer to § 7-20. Hoist F006-1 main rotor gearbox (with hydraulic installation, G201-1 [servo support] frame assembly, and mast fairing assembled) into helicopter, onto F020-1 upper frame assembly.
3. Install F252-1 strut and F235-13 strut assemblies, and install hardware securing strut assemblies to upper frame. Install gearbox mounting bolts and associated hardware, and apply light coat A257-9 anti-seize to threads. Special torque mounting bolts per § 20-33, standard torque bolts securing struts to upper frame per § 20-32, and torque stripe per Figure 5-1.
4. Remove hoisting equipment, and lifting fixture or nylon rope.
5. Install Tygon® tube on G254-1 (fuel) vent assembly and install D277-8 clamp. Verify security.
6. Install hardware securing A936-3 (ground) wire assembly to F560-1 bulkhead assembly. Connect F059-01 cabin harness assembly plug to F049-01 gearbox harness assembly receptacle.
7. Remove caps and plugs and connect D205-19 and D205-20 hose assemblies to gearbox and D500-3 oil pump. Using back-up wrench, special torque hose nuts per § 20-33, and torque stripe per Figure 5-1.
8. Attach (rotor brake) D126-2 cable assembly to (rotor brake assembly) B112-3 spring. Verify 0.25 inch minimum clearance between cable assembly and vent assembly Tygon® tube; adjust cable attachments as required.
9. Install hardware securing F121-7 push-pull tube assembly to F339-1 jackshaft weldment, and F121-5 push-pull tube assemblies to D212-5 servo assemblies. Standard torque hardware per § 20-32 and torque stripe per Figure 5-1.
10. Install hardware securing F908-1 and F910-1 yoke assemblies to plate assemblies, as removed. Shim engine driveline per § 63-11, and tail rotor driveline per § 65-30. Standard torque hardware per § 20-32, and torque stripe per Figure 5-1.
11. Install tailcone cowling assembly per § 53-23.

63-20 Main Rotor Gearbox Assembly (continued)

B. Installation (continued)

12. Install main rotor blades per § 62-10.

> **CAUTION**
>
> Prior to operation of a new, overhauled, or repaired main rotor gearbox, inject 5–6 ounces A257-22 oil into mast tube vent hole (not required if main gearbox has C251-3 Rev Q or subsequent main drive shaft installed). Service gearbox per § 12-11.

63-21 Yoke and Seal Replacement

A. (Tail Rotor Drive) F908-1 Yoke Assembly and Seal Removal

1. Remove tailcone cowling assembly per § 53-23.
2. Remove hardware securing aft F305-5 inlet to scroll assembly; rest inlet on F196-1 fan shaft.
3. Refer to Figure 63-1. Remove forward C947-3 flex plate assembly, noting hardware removed. Remove intermediate C947-3 flex plate assembly, noting hardware removed. Carefully maneuver fan shaft aft to access main gearbox's F908-1 yoke.
4. Refer to Figure 63-2. Set rotor brake. Remove and discard lockwire securing F904-1 plug to yoke and remove plug using a 3/4-inch hex-bit socket. Visually inspect forward C947-3 flex plate assembly and plug for damage. Order replacement parts from RHC Customer Service if damage is found.
5. Remove hardware securing F254-1 cover with C966-8 seal to F006-1 main rotor gearbox. Remove cover.
6. Using hydraulic press, press old seal from cover.

B. (Tail Rotor Drive) F908-1 Yoke Assembly and Seal Installation

1. Refer to Figure 63-1. Remove F266-1 spacer and replace A215-027 o-ring, as required. Reinstall spacer.
2. Clean and dry F254-1 cover; verify open face of seal points toward gearbox and press in new seal until completely seated.
3. Replace A215-149 o-ring, as required. Install cover assembly over pinion shaft.
4. Verify yoke and pinion splines are clean and undamaged. Coat splines of pinion with B270-21 protectant and install F908-1 yoke assembly.
5. Refer to Figure 63-2. Apply light coat of A257-9 anti-seize to F904-1 plug threads, install plug in gearbox, and special torque plug per MM § 20-33.

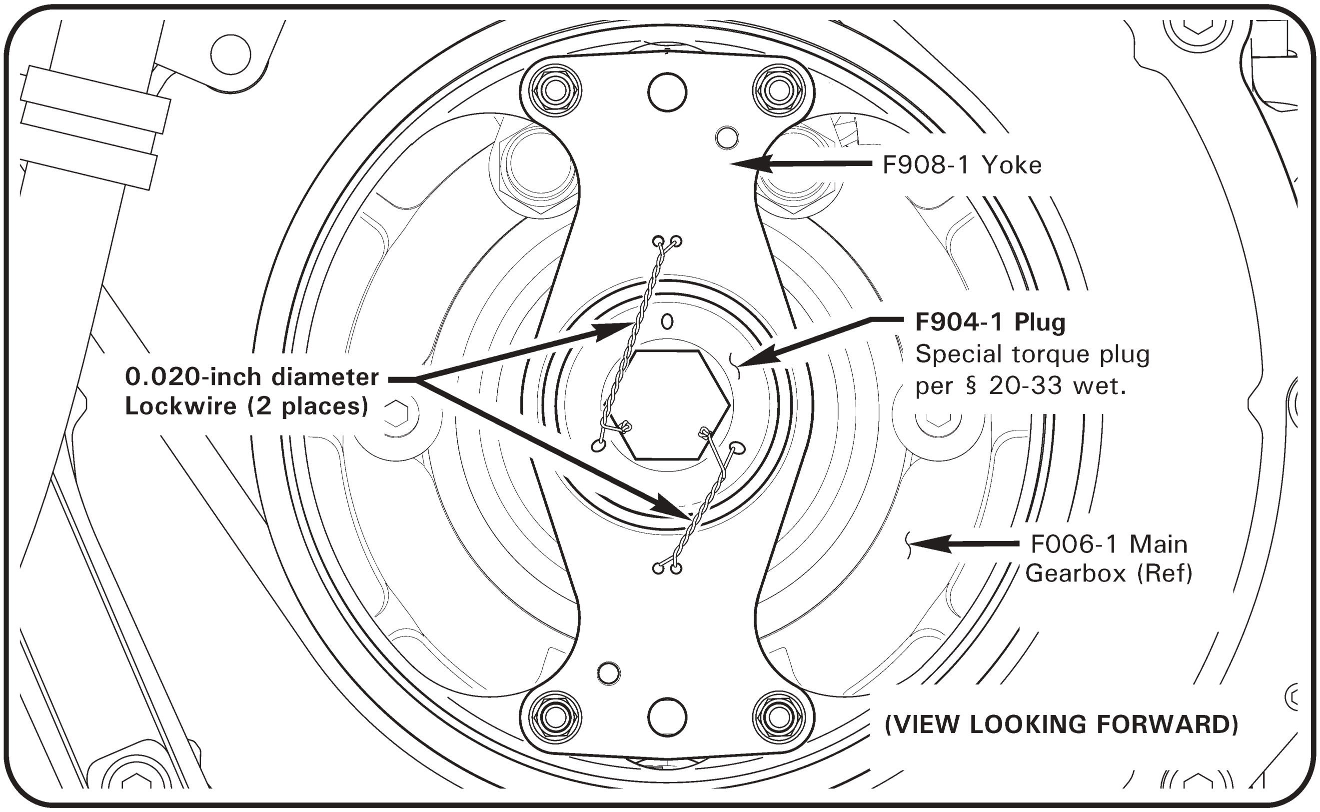

FIGURE 63-2 F908-1 YOKE ASSEMBLY INSTALLATION

63-21 Yoke and Seal Replacement (continued)

B. (Tail Rotor Drive) F908-1 Yoke Assembly and Seal Installation (continued)

6. In two places, install 0.020-inch diameter lockwire and safety plug to yoke with pigtails inside recess of plug as shown.
7. Install forward C947-3 flex plate assembly, using hardware removed (replace palnuts). Standard torque hardware per MM § 20-32 and torque stripe per MM Figure 5-1. Ensure safety wire is not contacting flex plate.
8. Install and shim intermediate C947-3 flex plate assembly per MM § 65-30.
9. Install hardware securing aft F305-5 inlet to scroll assembly. Verify 0.10 inch minimum gap between fanwheel assembly and inlet.
10. Install tailcone cowling assembly per § 53-23.
11. Set hall effect sender-to-magnet gap per § 63-40.

63-21 Yoke and Seal Replacement (continued)

C. (Engine-Driven) F910-1 Yoke Assembly and Seal Removal

1. Remove tailcone cowling assembly per § 53-23. Remove engine cowling assembly per § 53-21.
2. Drain main gearbox oil per § 12-11.
3. Refer to Figure 63-1. Remove hardware securing A947-2 (forward) plate assembly to F910-1 yoke assembly, and A947-2 (aft) plate assembly to F642 shaft weldment, noting hardware removed. Support weldment to allow clearance for yoke removal.
4. Place a wood block between firewall and yoke flange (to prevent yoke from rotating) or engage rotor brake. Remove nut and washer securing yoke to pinion, then remove yoke.
5. Remove rotor brake per § 63-30.
6. Remove F255 cover with C966 seal, but do not remove shims under pinion bearing. Remove F266-2 spacer.
7. Using hydraulic press, press old seal from cover.

D. (Engine-Driven) F910-1 Yoke Assembly and Seal Installation

CAUTION
Do not remove shims under pinion bearing. Shims control bearing preload and gear backlash.

1. Refer to Figure 63-1. Replace A215-025 o-ring, as required.
2. Clean and dry F255 cover; verify open face of seal points toward gearbox and press in new seal until completely seated.
3. Replace A215-152 o-ring, as required. Install cover assembly over pinion shaft. Install F266-2 spacer.
4. Install rotor brake per § 63-30.
5. Service main gearbox per § 12-11.

Intentionally Blank

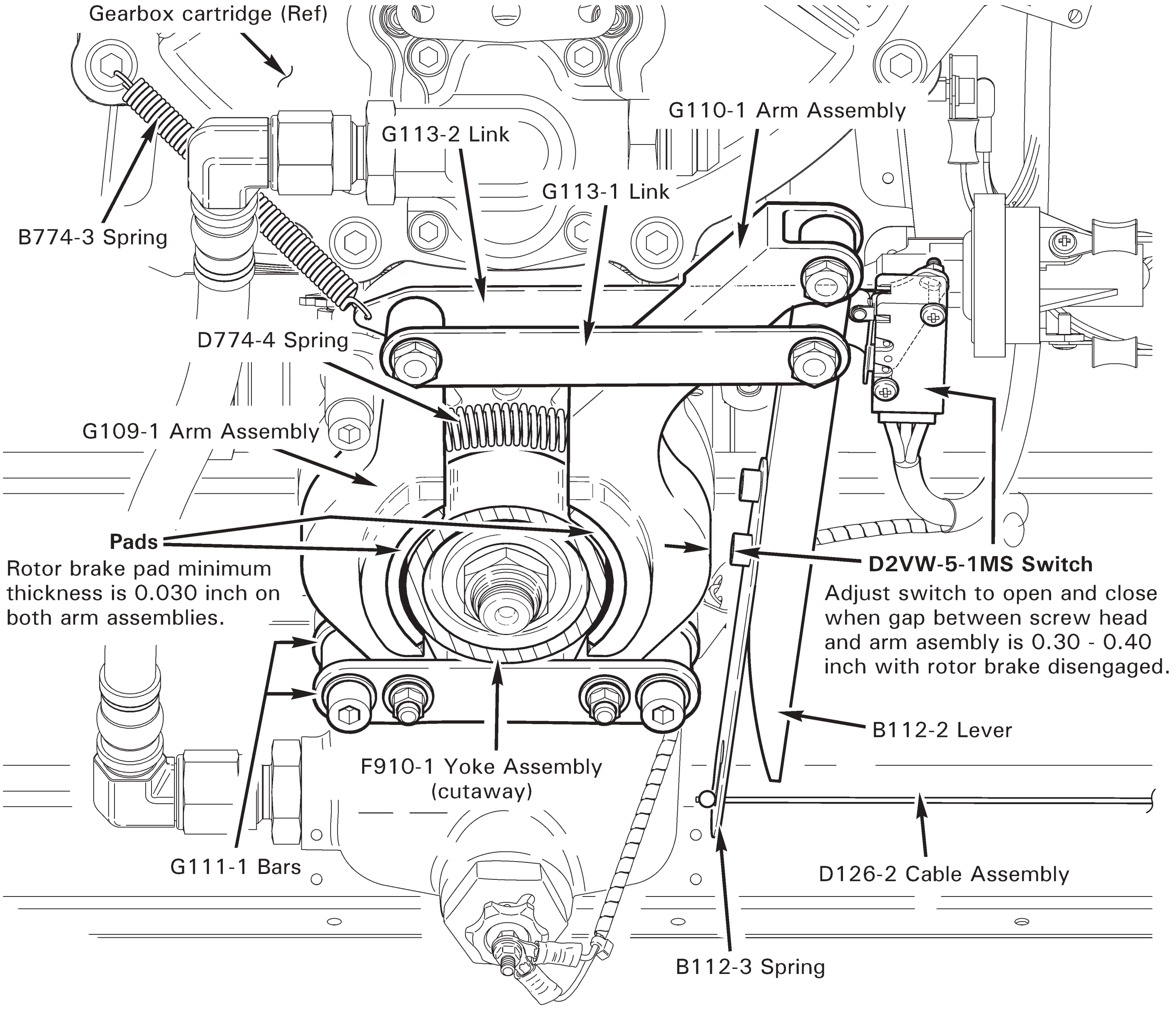

FIGURE 63-3 ROTOR BRAKE

63-30 Rotor Brake

A. Removal

1. Remove (engine-driven) F910-1 yoke assembly per § 63-21, Part C steps 1 thru 3.
2. Refer to Figure 63-3. Detach D126-2 cable assembly from B112-3 spring. Detach B774-3 spring from gearbox cartridge retaining screw or rotor brake assembly link.
3. Remove hardware securing D2VW-5-1MS switch to brake assembly link.
4. Remove hardware and spacers securing brake assembly mounting bars to gearbox cartridge. Remove G033-1 brake assembly F256-1 shield (see Figure 63-1).

B. Installation

1. Refer to Figure 63-3. Verify minimum 0.030 inch rotor brake pad thickness on both arm assemblies.
2. Verify F910-1 yoke assembly and pinion splines are clean and undamaged. Coat splines of pinion with B270-21 protectant.
3. Install F256-1 shield, then position G033-1 brake assembly over pinion and install spacers and hardware securing brake assembly mounting bars to gearbox cartridge. Standard torque screws per § 20-32 and torque stripe per Figure 5-1.
4. Install yoke on pinion shaft. Place a wood block between firewall and yoke flange (to prevent yoke from rotating). Install pinion retaining nut and washer and special torque nut per § 20-33. Coat nut and exposed pinion splines with B270-21 protectant. When dry, torque stripe per Figure 5-1.
5. Attach B774-3 spring to gearbox cartridge retaining screw and rotor brake assembly link. Attach D126-2 cable assembly to B112-3 spring.
6. Install hardware securing D2VW-5-1MS switch to brake assembly link, but do not tighten. Adjust switch to open and close when gap between B112-3 spring lower retaining screw screw head and G110-1 arm assembly is 0.30–0.40 inch with brake disengaged. Pivot switch about lower fastener as required and tighten fasteners to set gap. Function check rotor brake light.
7. Install hardware securing A947-2 (forward) plate assembly to F910-1 yoke assembly, and A947-2 (aft) plate assembly to F642 shaft weldment. Shim engine driveline per § 63-11. Standard torque hardware per § 20-32, and torque stripe per Figure 5-1.
8. Install tailcone cowling assembly per § 53-23. Install engine cowling assembly per § 53-21.

63-31 Pad Replacement

A. Arm Removal

> **NOTE**
>
> Rotor brake pad minimum thickness is 0.030 inch on both arm assemblies. Replace arm assemblies when pads are worn beyond limit.

1. Remove rotor brake per § 63-30.
2. Remove hardware and spacers securing G109-1 arm assembly to (2) G111-1 bars and G113-1 & -2 links. Remove D774-4 spring.
3. Remove hardware and spacers securing G110-1 arm assembly to (2) G111-1 bars and B112-2 lever. Loosen fastener securing G113-1 & -2 links to B112-2 lever.

B. Arm Installation

1. Refer to Figure 63-3. Lubricate spacers with A257-1 grease and install in new G110-1 arm assembly. Install hardware securing G110-1 arm assembly to (2) G111-1 bars and B112-2 lever, but do not torque.
2. Lubricate spacers with A257-1 grease and install in new G109-1 arm assembly. Install D774-4 spring, and install hardware securing G109-1 arm assembly to (2) G111-1 bars and G113-1 & -2 links. Standard torque all bolts and torque stripe per Figure 5-1.
3. Install rotor brake per § 63-30.

63-40 Rotor RPM

1. Remove tailcone cowling assembly per § 53-23.
2. Refer to Figure 63-1. Measure gap between both F908-1 yoke assembly magnets at each 103SR13A-3 (Hall effect) sender. Verify gap is between 0.030 ± 0.010 inch.
3. As required, loosen sender jam nuts and adjust to obtain 0.030 ± 0.010 inch gap. Special torque jam nuts per § 20-33 and torque stripe per Figure 5-1.
4. Install tailcone cowling assembly per § 53-23.

CHAPTER 64

TAIL ROTOR

Section	*Title*	*Page*
64-00	Description	64.1
64-10	Tail Rotor Assembly	64.1
64-11	Static Balance	64.5
64-20	Tail Rotor Blades	64.7
64-30	Tail Rotor Blade Inspection and Repair	64.9
64-31	Scratches and Corrosion	64.9
64-32	Dents	64.11
64-33	Erosion	64.12
64-34	Root Fitting Damage	64.12
64-35	Nicks and Notches	64.13
64-36	Blade Refinishing	64.14
64-37	Painting	64.14
64-38	Tail Rotor Blade Condition and Care	64.17
64-40	Tail Rotor Hub	64.21
64-41	Bearing Replacement	64.21
64-42	Inspection	64.21

Intentionally Blank

CHAPTER 64

TAIL ROTOR

64-00 Description

The R66 tail rotor assembly is a conventional, two-bladed teetering rotor system.

Tail rotor blades are constructed of a wrap-around aluminum skin, bonded to aluminum honeycomb and a forged aluminum root fitting. Self-lubricating spherical bearings in the root fitting allow blades to change pitch.

Tail rotor blades are assembled to the hub with a fixed precone angle.

The tail rotor aluminum hub mounts to the gearbox output shaft by teeter hinge. Elastomeric bearings in the hub allow the rotor to teeter. The tail rotor hub teetering stop is a urethane bumper, attached to the output shaft.

64-10 Tail Rotor Assembly

A. Removal

1. Refer to Figure 64-1. Tag each pitch link with corresponding blade serial number. Disconnect pitch links from tail rotor blades; keep associated hardware with each link.

> NOTE
>
> Tail rotor pitch link-to-blade attachment bolts may be different lengths and/or have different washers installed under nut for dynamic balancing.

2. Remove nut and A141-14 washer securing C119-2 bumper to tail rotor gearbox output shaft.
3. Mark hub with teeter hinge bolt orientation for reinstallation. Remove teeter hinge bolt, then slide tail rotor assembly and bumper off of shaft.

> NOTE
>
> Protect tail rotor assembly from damage when maintenance is performed on workbench.

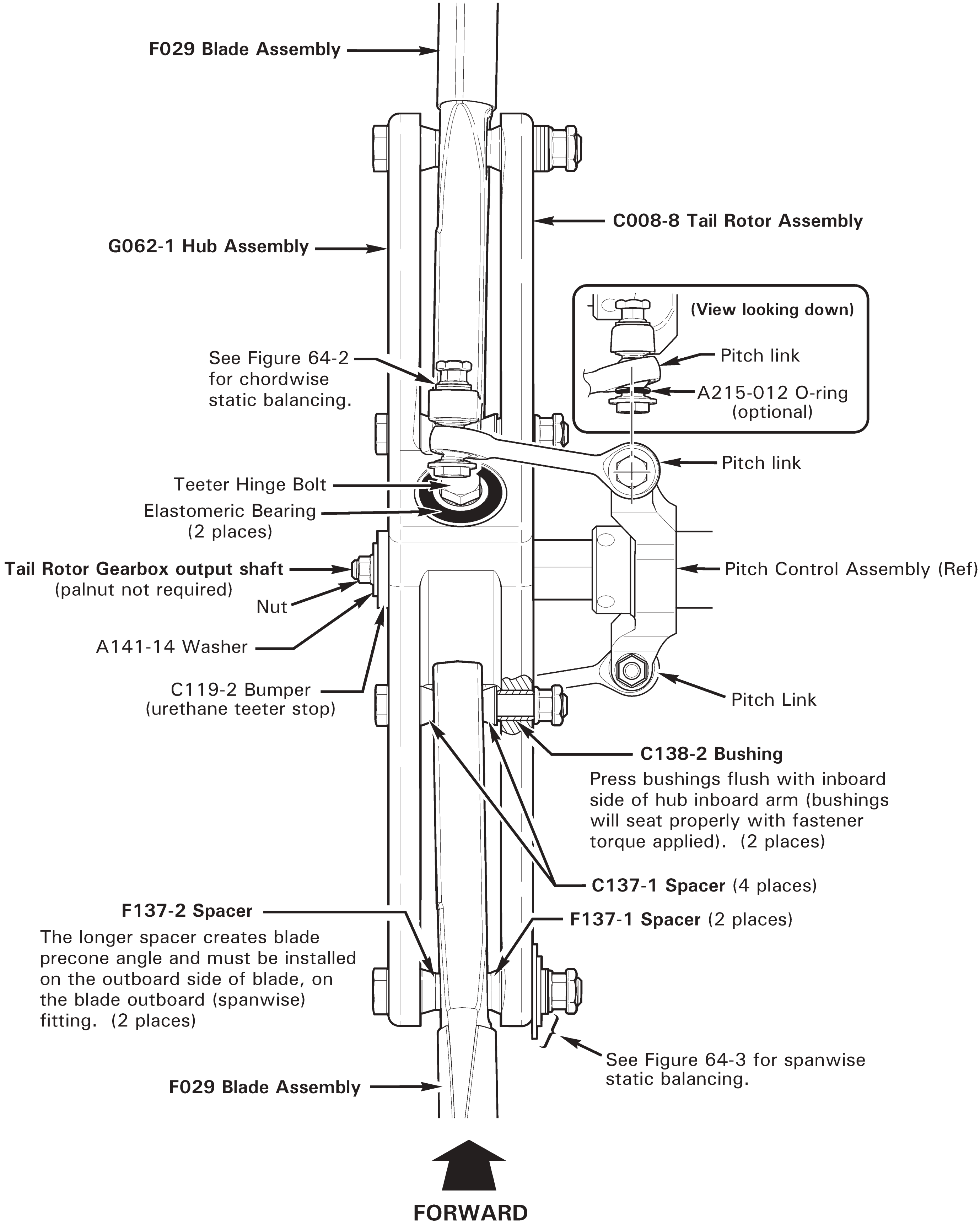

FIGURE 64-1 TAIL ROTOR INSTALLATION

64-10 Tail Rotor Assembly (continued)

B. Installation

1. Perform static balance per § 64-11 if balancing hardware information is unknown, if blades were replaced, or if any rework has changed mass of rotor assembly.
2. Clean tail rotor gearbox output shaft and elastomeric bearing spacer clamping surfaces with lint-free cloth dampened with acetone.
3. Refer to Figure 64-1. Position tail rotor assembly on tail rotor gearbox output shaft, matching tail rotor blades to corresponding pitch links. Verify tail rotor is installed for clockwise rotation when viewed from left side of aircraft.
4. Install teeter hinge bolt and hardware; tighten nut until elastomeric bearing metal spacers contact output shaft, but do not torque. Verify blades cone toward tail rotor gearbox.

CAUTION

If balancing hardware information is unknown, perform static balance per § 64-11.

5. Remove tags. Install hardware securing tail rotor blades to pitch links as removed, or as determined by static balancing. Standard torque nuts & palnuts per § 20-32, and torque stripe per Figure 5-1.
6. Fabricate a tracking aid using 1x12-inch aluminum sheet; make a 90° bend 2 inches from one end. With tail rotor horizontal, tape tracking aid to tailcone near blade tip.
7. Rotate tail rotor drive shaft and mark tracking aid where each blade tip drain hole passes. Adjust (teeter) tail rotor until both blade tips pass the same point within 0.125 inch. Special torque teeter hinge bolt per § 20-33. Recheck track. Repeat step until blades are tracked.
8. Install palnut on teeter hinge bolt, standard torque per § 20-32, and torque stripe per Figure 5-1. Remove tracking aid.
9. Teeter tail rotor hub back and forth. Verify teeter hinge bolt, bearing metal spacers, washers, and nuts remain stationary when tail rotor is teetered.
10. Install C119-2 bumper, A141-14 washer, and nut. Special torque nut per § 20-33 and torque stripe per Figure 5-1.
11. Dynamically balance tail rotor per § 18-20.

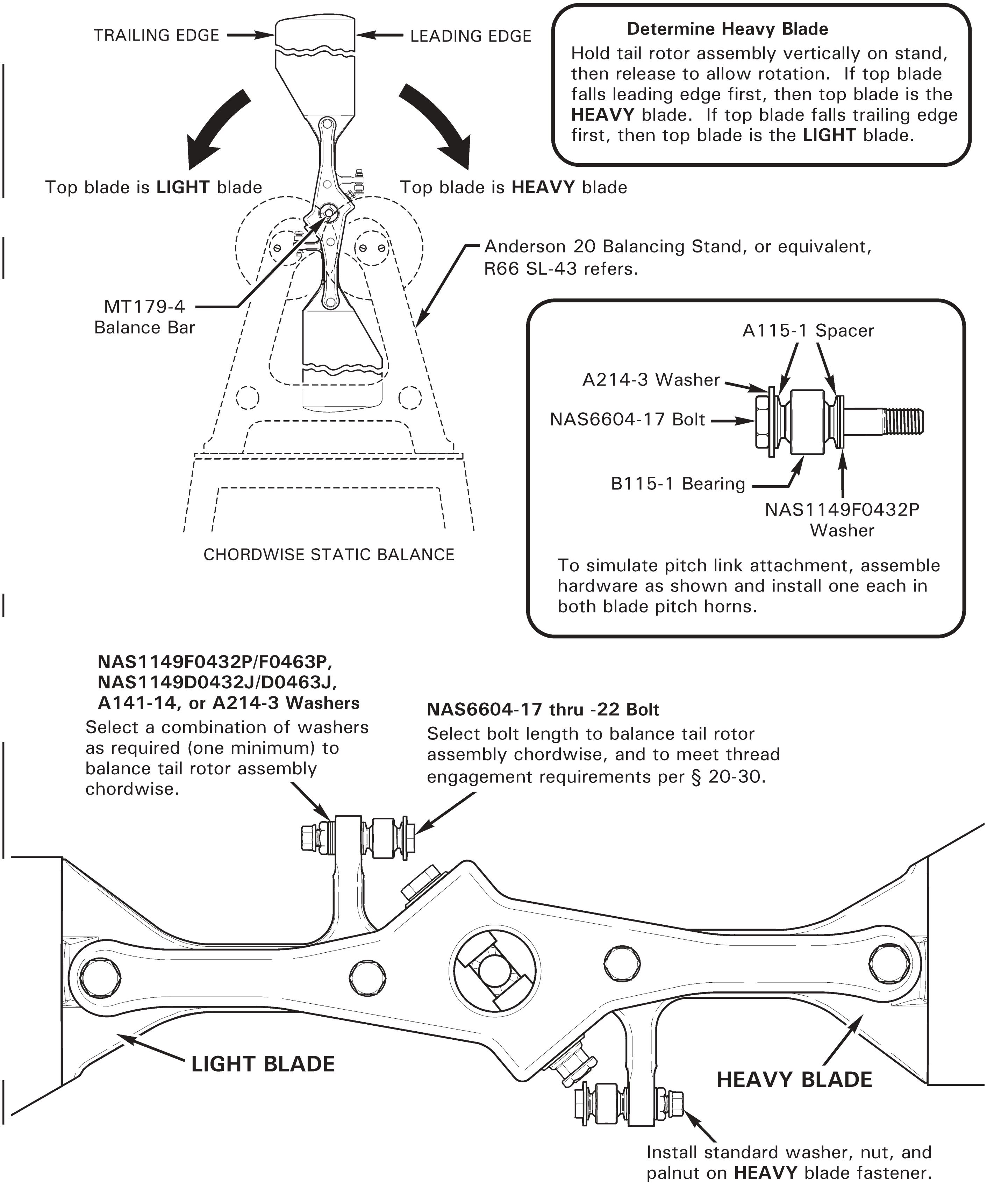

FIGURE 64-2 CHORDWISE STATIC BALANCE

64-11 Static Balance

> NOTE
>
> Tail rotor assemblies received from RHC are static balanced at factory. Perform static balance in calm-air environment.

1. Refer to Figure 64-2. Install MT179-4 balance bar into tail rotor assembly. Install teeter hinge bolt thru larger hole, install nut and tighten until elastomeric bearing metal spacers contact bar. Using a protractor or square, adjust balance bar until approximately perpendicular to hub. While maintaining perpendicularity, special torque nut per § 20-33; install palnut finger-tight. Mark hub with teeter hinge bolt orientation for reinstallation.
2. Using NAS6604-17 bolts, assemble hardware as shown in blade pitch horns using bearing to simulate pitch link. Install standard washer, palnut, and nut on each bolt hand-tight.
3. Place tail rotor assembly, with balance bar, vertically on balancing stand. Adjust pitch of both blades so they are similar. Hold tail rotor assembly vertically, then release to allow rotation. If top blade falls leading edge first, then top blade is the heavy blade. If top blade falls trailing edge first, then top blade is the light blade.
4. Chordwise balancing is achieved by varying NAS6604 bolt length and nut-side washers at light blade pitch horn. Select bolt length & washers for balancing, and to meet thread engagement requirements per § 20-30 Part E step 5, and install hand-tight.
5. Repeat steps 3 & 4 until top blade does not fall (or falls very slowly) when tail rotor is positioned vertically on balancing stand. Balance within one thin steel washer.
6. Refer to Figure 64-3. Place tail rotor assembly, with balance bar, horizontally on balancing stand. Hold tail rotor horizontally, then release to allow rotation. The falling blade is the heavy blade; the rising blade is the light blade.
7. Spanwise balancing is achieved by varying nut-side washer mass on light blade's outboard blade-to-hub attach bolt. Four washers are required under nut on outboard blade-to-hub attach bolt; place largest washers closest to hub. Select washers for balancing, standard torque hardware per § 20-32, and repeat step 6.
8. Repeat steps 6 & 7 until tail rotor does not rotate (or rotates very slowly) when positioned horizontally on balancing stand. Balance within one thin aluminum washer.
9. From each blade pitch horn, remove A214-3 washer, two A115-1 spacers, & B115-1 bearing from bolt; install palnut & nut finger-tight to retain bolt and washer(s) in the correct pitch horn.
10. Remove MT179-4 balance bar. Install teeter hinge bolt & washers in hub, and install palnut & nut finger-tight on bolt.
11. As required, touch-up bolt heads using § 20-77 approved paint.

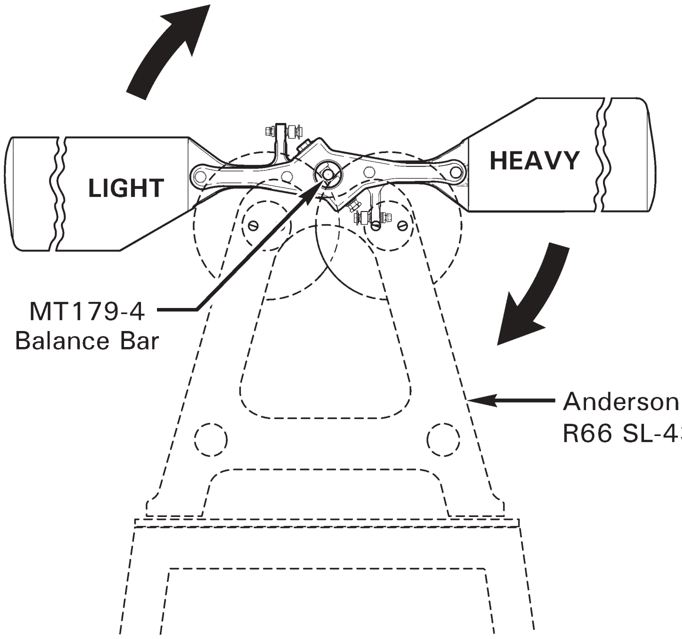

Determine Heavy Blade
Hold tail rotor assembly horizontally on stand, then release to allow rotation. The falling blade is the **HEAVY** blade; the rising blade is the **LIGHT** blade

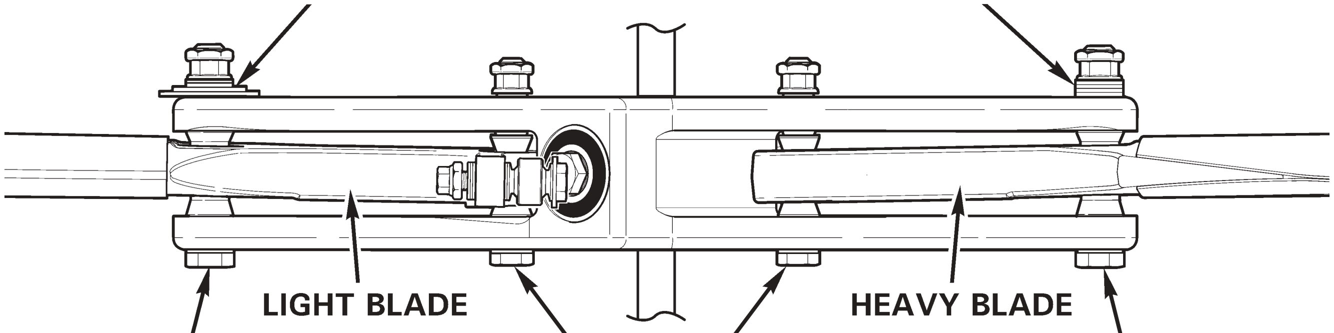

FIGURE 64-3 SPANWISE STATIC BALANCE

64-20 Tail Rotor Blades

> NOTE
>
> Protect tail rotor assembly from damage when maintenance is performed on workbench.

A. Removal

1. Remove tail rotor assembly per § 64-10.
2. Refer to Figure 64-1. Remove hardware securing F029 blade assemblies to G062-1 hub assembly. Remove blades, spacers, and hardware; do not remove C138-2 bushings unless required.

B. Installation

> **CAUTION**
>
> Tail rotor blades are a matched set. If only one blade is being replaced, contact RHC Customer Service with airworthy blade serial number for a matching replacement blade.

1. Refer to Figure 64-1. If removed, apply light coat of approved primer per § 20-70 to outer surface of C138-2 bushings; while primer is wet, press bushings flush with inboard side of hub inboard arm (bushings will seat properly with fastener torque applied).

> **CAUTION**
>
> F137-2 spacer creates blade precone angle and must be installed on the outboard side of blade, on the blade outboard (spanwise) bolt.

2. Install tail rotor blades and spacers in hub. Assemble blades for clockwise rotation when viewed from left side of aircraft, and so blades will cone toward tail rotor gearbox. Install hardware securing blades to hub; standard torque per § 20-32, and torque stripe inboard nuts only.
3. Perform tail rotor assembly static balance per § 64-11.

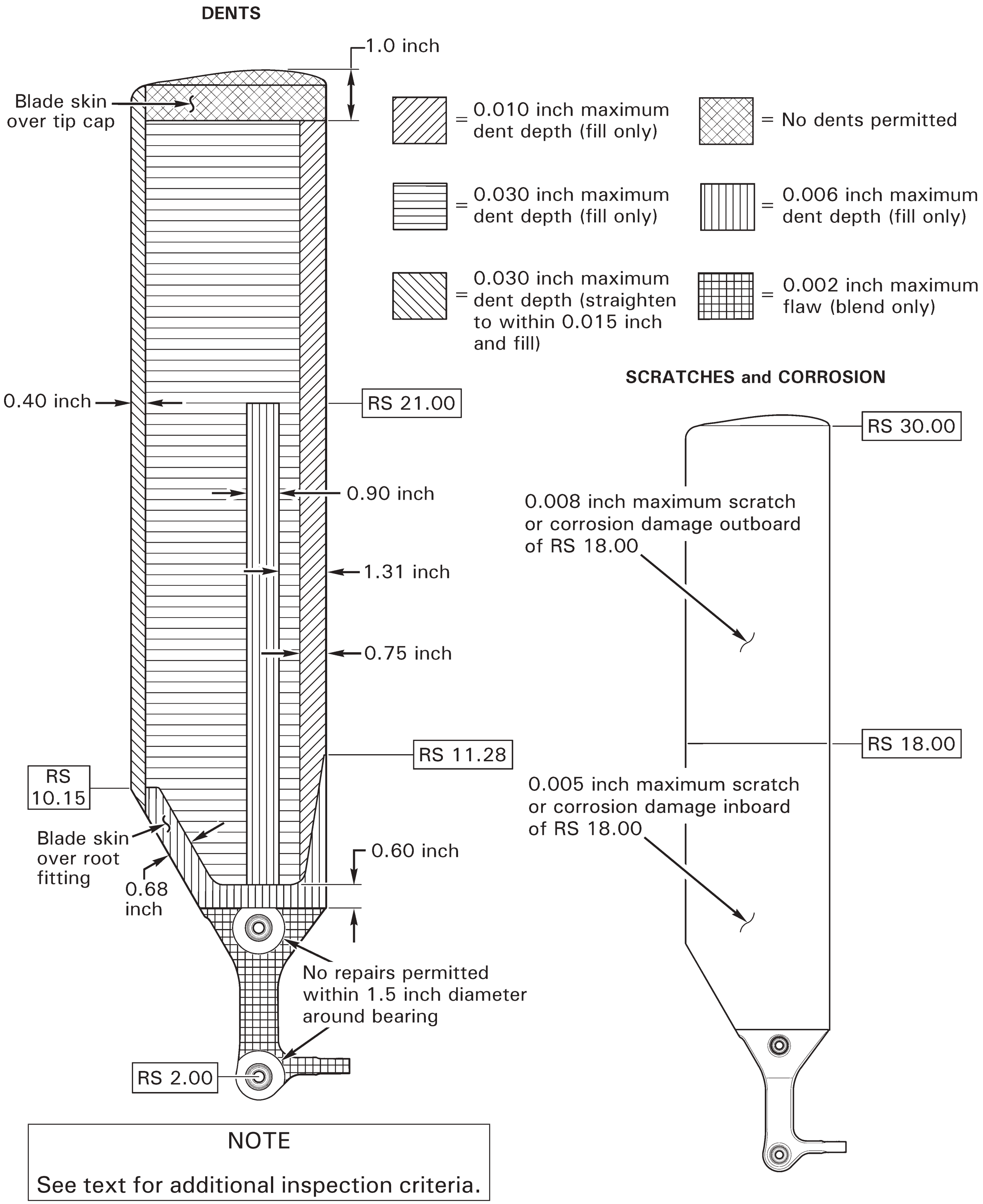

NOTE

See text for additional inspection criteria.

FIGURE 64-4 F029-1 BLADE INSPECTION CRITERIA

64-30 Tail Rotor Blade Inspection and Repair

> **CAUTION**
>
> Do NOT use power tools, chemical paint strippers, or chemical corrosion removers to repair rotor blades.

This blade repair procedure outlines the repair limits, methods and materials used for repairing tail rotor blades. Repairs are limited to blending out scratches, dents, nicks, removing corrosion, and refinishing the blades. The inspections, repairs and limitations contained herein refer to damage sustained in service, including damage during shipping and handling (manufacturing irregularities are treated separately by the factory). In-service damage will generally exhibit paint scuffing or scratches and often times freshly-exposed metal in the form of scratches in the finish. If there are any questions as to the possibility of a manufacturing irregularity, contact RHC Technical Support.

> **CAUTION**
>
> A blade may be repaired more than one time. However, in no case can more than the maximum material be removed or the maximum dent depth be exceeded in any one location.

64-31 Scratches and Corrosion

A. Limits

1. Refer to Figure 64-4. Measure damage in blade skins per § 62-40; verify damage does not exceed the following limits:
   a. 0.005 inch maximum damage inboard (spanwise) of RS 18.00.
   b. 0.008 inch maximum damage outboard (spanwise) of RS 18.00.
2. If damage is within limits, repair blade skins per Part B.

B. Repair

1. Blend out scratches or corrosion on blade skins in spanwise direction with a 0.10 inch blend radius minimum. Use 220-grit or finer wet-or-dry aluminum-oxide abrasive paper, and finish with 320-grit or finer wet-or-dry abrasive paper.
2. Measure material removed per § 62-40; verify repair does not exceed limits per Part A.
3. Refinish blade repairs per § 64-36.

Intentionally Blank

64-32 Dents

CAUTION

Tap-test dented areas in honeycomb. If any voids are found associated with dents, contact RHC Technical Support.

Tap-test voids, debonds, and dents in blades using an AN970-4 washer or 1965-or-later U.S. quarter-dollar coin in good condition.

CAUTION

When dented areas are found, inspect opposite side of the blade for a bulge. Replace blade with a bulge greater than 0.010 inch opposite a dent.

CAUTION

Do not repair any dent that has a sharp cut or break in the skin. If necessary, locally fluorescent penetrant inspect, keeping penetrant materials away from bond joints.

WARNING

Any damaged tail rotor blade that cannot be repaired within the limits of this section must be removed from service immediately and marked "scrap."

A. Limits

1. Measure dents in blade skin per § 62-40.
2. Refer to Figure 64-4. Smooth, round bottom dents with 0.060 inch minimum radius may be repaired when damage does not exceed the following limits:
   a. Forward of 0.75 inch (chordwise) from leading edge:
      i. 0.010 inch maximum dent depth.
   b. Aft of 0.75 inch (chordwise) from leading edge, and forward of 0.40 inch (chordwise) from trailing edge:
      i. 0.030 inch maximum dent depth (except noted area).
      ii. 0.006 inch maximum dent depth 0.90 inch wide aft of 1.31 inch from leading edge, inboard of RS 21.00.
   c. Aft of 0.40 inch (chordwise) from trailing edge:
      i. 0.030 inch maximum dent depth (repair: straighten to within 0.015 inch depth before fill).
   d. Dents over the skin-to-root fitting bond joint:
      i. 0.006 inch maximum dent depth.
3. No dents are permitted on visible portion of tip cap or on blade skin within 1.0 inch of blade tip.
4. If damage is within limits, repair blade skins per Part B.

64-32 Dents (continued)

B. Repair

1. Using 10X magnification, visually inspect blade skin dented area for cracked metal; remove blade from service if metal is cracked.
2. Remove cracked paint by hand-sanding spanwise with 220-grit or finer wet-or-dry aluminum-oxide abrasive paper, and finishing with 320-grit or finer wet-or-dry abrasive paper. Avoid removing metal.
3. Refinish dented area per § 64-36.

64-33 Erosion

Replace any blade where erosion has caused deformation or ripples in the leading edge.

64-34 Root Fitting Damage

A. Limits

1. Measure damage in root fitting per § 62-40.
2. Refer to Figure 64-4. All damage must be repaired within the following limits:
   a. No repairs permitted within 1.5 inch diameter centered around spherical feathering bearings.
   b. Pitch horn clamping surfaces:
      i. 0.002 inch deep each side (may only be repaired one time).
      ii. Parallel to each other within 0.002 inch.
      iii. Perpendicular to 0.250 inch diameter hole within 0.002 inch.
   c. 0.250 inch diameter hole may be reamed to 0.252 inch diameter maximum.
   d. 0.002 inch maximum depth on other root fitting exposed areas.
3. If damage is within limits, repair root fitting per Part B.

B. Repair

1. All damage on root fitting must be hand-blended spanwise using a 0.10 inch blend radius minimum within Part A limits.
2. Use 220-grit or finer wet-or-dry aluminum-oxide abrasive paper, and finish with 320-grit or finer wet-or-dry abrasive paper. Remove minimum material necessary for damage removal.
3. Conversion coat and prime (chromated epoxy primer preferred) bare aluminum per § 20-60. Do not allow conversion coat chemical to contact blade bond joint.
4. Paint root fitting per § 64-37.

64-35 Nicks and Notches (Trailing Edge)

A. Limits

1. Refer to Figure 64-5. Verify damage (or repair) does not exceed following limits:
   a. 0.050 inch maximum depth (chordwise) in trailing edge.
   b. Overall chord length 5.450 inches minimum.
   c. Blended area to extend 1.0 inch minimum to each side of damage with a 2.0 inch radius minimum.
2. If damage is within limits, repair blade skins per Part B but do not exceed limits.

B. Repair

1. Refer to Figure 64-5. Trailing edge must remain square with skins; skin must not taper.
2. Polish out blade damage using 220-grit or finer wet-or-dry aluminum-oxide abrasive paper, and finish with 320-grit or finer wet-or-dry abrasive paper. Hand-sand in spanwise direction.
3. A fine-toothed file may be used along trailing edge, provided the area is finished with 320-grit or finer wet-or-dry abrasive paper. Hand-sand or file in spanwise direction only.
4. Remove only the material necessary to reach the bottom of the damage, and to blend the reworked area to the radius or dimension required. Visually inspect and verify all damage is removed.
5. Measure reworked area and verify material removed and/or new chord dimension is permissible per Part A.
6. Apply B270-27 sealant to exposed bond joints.
7. Refinish blade per § 64-36, as required.

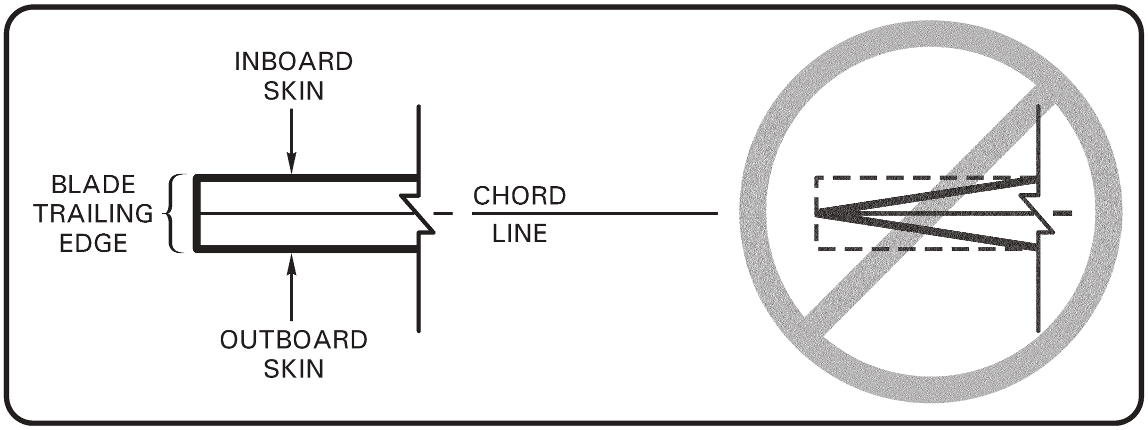

FIGURE 64-5 REPAIRS TO BLADE TRAILING EDGE

64-36 Blade Refinishing

1. Using 320-grit or finer wet-or-dry aluminum-oxide abrasive paper, feather existing paint around blade repairs. Do not remove metal.
2. Conversion coat and prime (chromated epoxy primer preferred) bare aluminum per §§ 20-51 & 20-60.
3. In areas where damage or repair has affected blade airfoil, apply layers of Corlar 13580S Epoxy Primer (or equivalent high-build primer) to build up airfoil.
4. Hand-sand cured epoxy primer (or block sand) in spanwise direction to a smooth, aerodynamic finish, congruent with blade airfoil.
5. Paint blade per § 64-37.

64-37 Painting

1. Perform § 64-36 as required.
2. Apply two coats of Desoprime CA7502 epoxy primer (or equivalent) to required areas. Scuff primer prior to applying second coat. Time limits are 10 minutes minimum, 8 hours maximum between coats. If 8 hours is exceeded, scuff with 600-grit wet-or-dry aluminum oxide abrasive paper in a spanwise direction, QSOL 220 wipe and mist primer before applying next coat.
3. Reference § 20-77. Apply white Imron polyurethane enamel or equivalent paint to required areas. Allow to dry before masking for trim stripes.
4. Refer to Figure 64-6. Apply masking to bearings and white trim stripes. Apply black paint to black trim stripes and root fitting.
5. Remove all masking materials.

Intentionally Blank

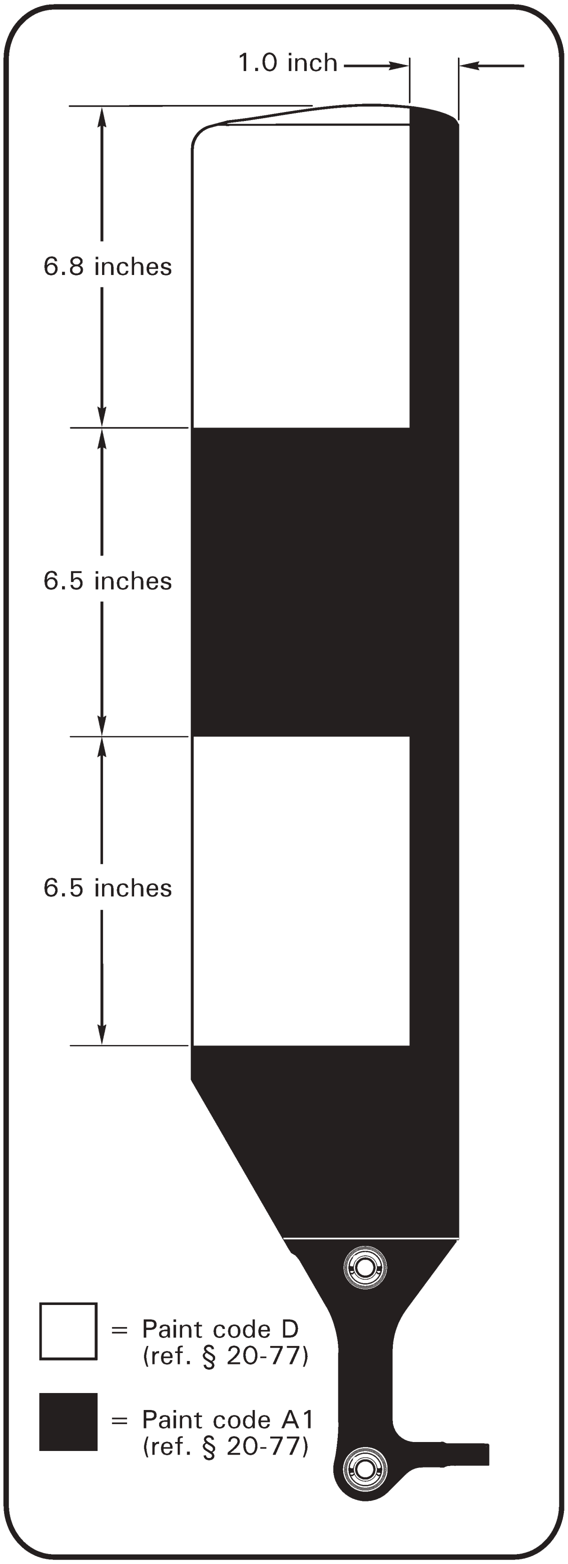

FIGURE 64-6 F029-1 BLADE PAINT SCHEME

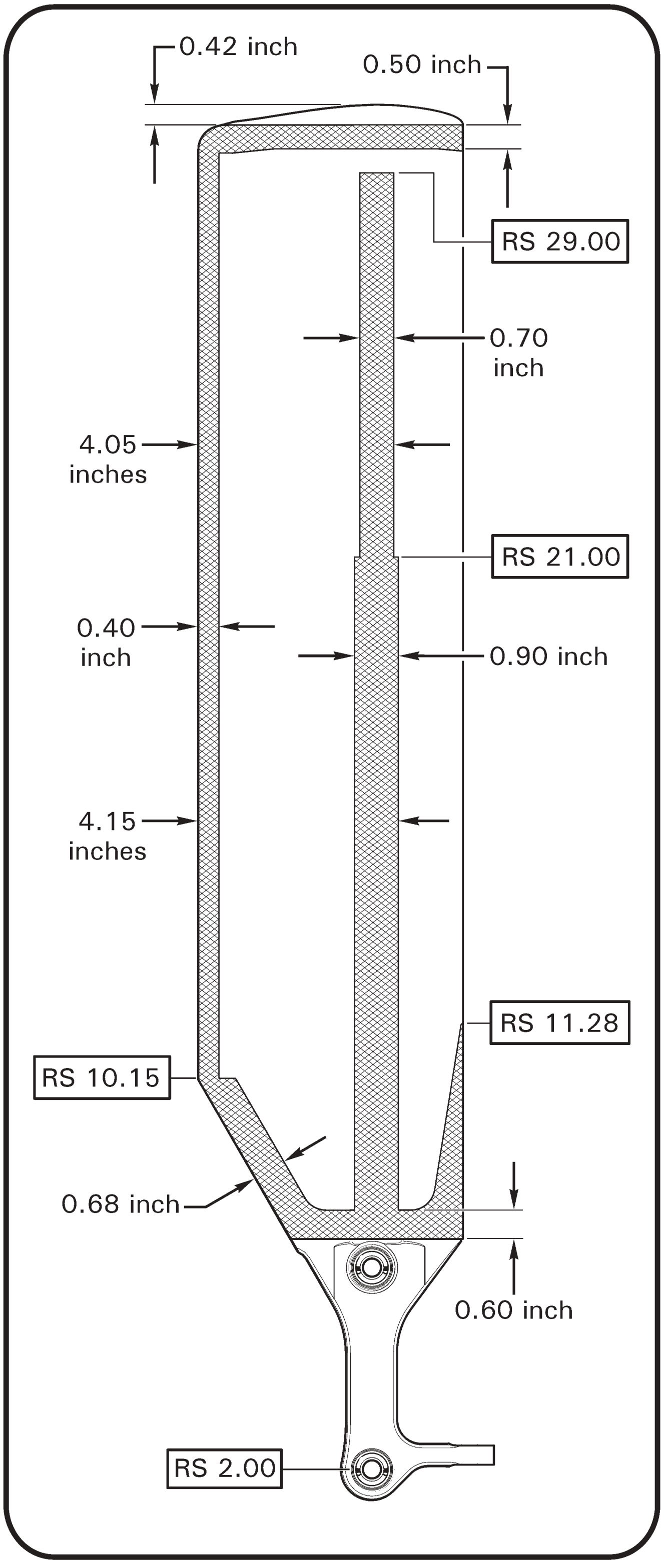

FIGURE 64-7 F029-1 BLADE BONDED AREAS

64-38 Tail Rotor Blade Condition and Care

Regular preventive maintenance of tail rotor blades is imperative for continued safe operation. Leading edge pitting or degradation of the bond at the tip cap can result if regular preventive maintenance is not performed; additional care may be required in corrosive environments such as coastal or shipboard operations. The following maintenance is recommended to prevent and mitigate the effects of corrosion:

1. Bubbled paint can be an indication of underlying corrosion. If bubbled paint is observed at or adjacent to tip cap bond line, or if bond line is exposed, perform following maintenance prior to further flight.

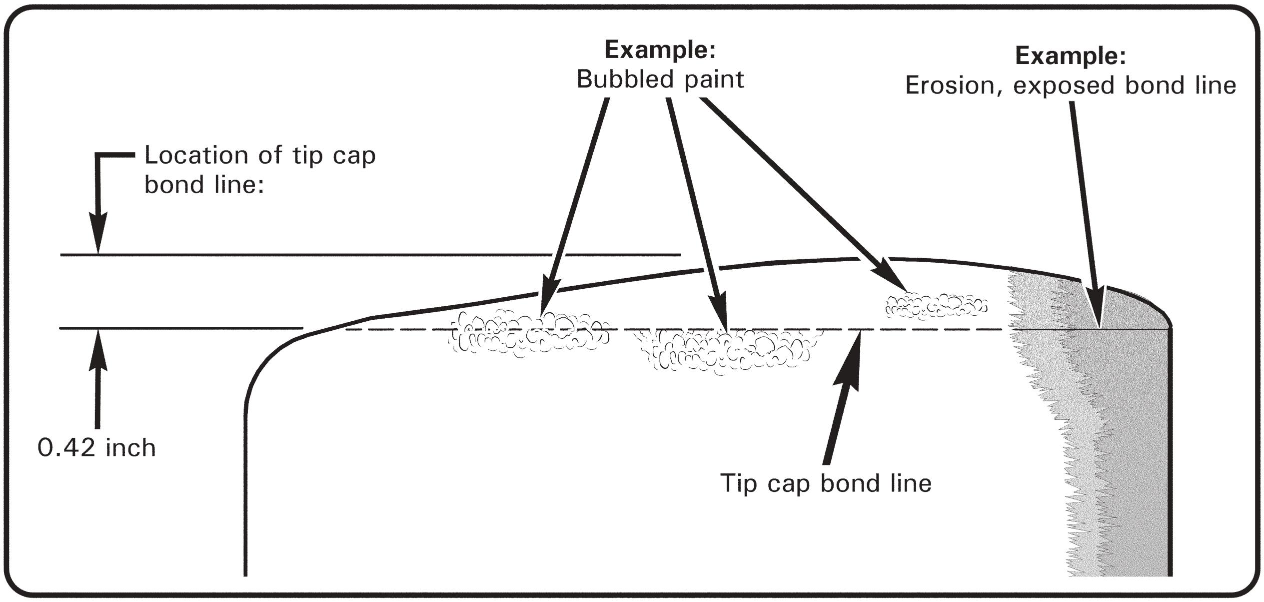

FIGURE 64-8 F029-1 BLADE TIP CAP BOND LINE

2. Maintain blade condition as follows:

   a. At, or adjacent to, tip cap bond line: Remove loose or bubbled paint with fingernail or plastic scraper. Using minimum 10X magnification, examine bond line for both presence of adhesive & no corrosion (white powder and/or pitting). Metal-to-metal contact of tip cap to skin is permissible, but any gaps in remaining bond line due to missing blue (or brown) adhesive requires blade replacement. Any evidence of corrosion at bond line requires blade replacement. If blade(s) require replacement, contact RHC Technical Support with part number & serial number of affected and opposite blades.

   b. At areas away from tip cap bond line: Remove any corrosion, and bubbled or loose paint, by hand-sanding in a spanwise direction using 220-grit aluminum-oxide abrasive paper and minimum 0.1 inch blend radius; finish sand with 320-grit aluminum-oxide abrasive paper. Remove only material necessary to eliminate corrosion; any hole that completely penetrates blade skin requires blade replacement.

64-38 Tail Rotor Blade Condition and Care (continued)

2. c. Feather edge of paint bordering any bare metal by hand-sanding spanwise with 320-grit or finer wet-or-dry aluminum-oxide abrasive paper. Do not remove bare metal when feather sanding.

   Preferred blade condition is with fully painted leading edge. Use two coats of Desoprime CA7502 epoxy primer (or equivalent). Scuff primer prior to applying second coat. Use Imron polyurethane enamel or equivalent paint. Refer to § 20-77 for specific paint codes. Blades with striped leading edges may be painted with solid black leading edge (ref. Figure 64-6) if desired for ease of application.

   Paint offers the best protection against leading edge corrosion. If painting blades is impractical, at least a single coat of primer on leading edges provides some protection.

3. Balance tail rotor per § 18-20 after any corrosion removal or painting.

4. When operating in a corrosive environment, clean tail rotor daily per POH section 8, Cleaning Helicopter (mild soap means a pH between 7 & 9). If waxing blades is impractical, wipe blade leading edges with standard WD-40® brand light oil or equivalent; do not use ACF-50® lubricant or “Specialist” versions of WD-40® on blades, and do not use Salt-Away®.

Intentionally Blank

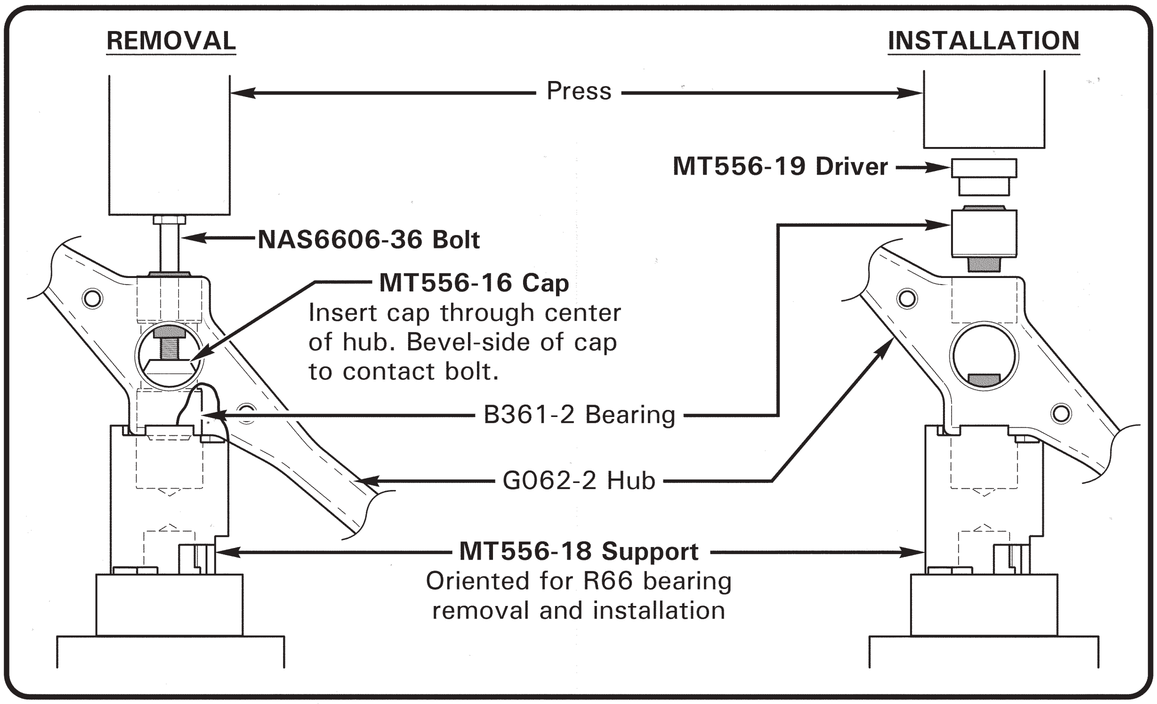

FIGURE 64-9 MT556-17 (ALL-MODEL) TAIL ROTOR HUB BEARING REPLACEMENT TOOL KIT

(Kit includes [1] MT556-6 Cap [R22], [1] MT556-16 Cap [R44 & R66], [1] MT556-18 Support, [1] MT556-19 Driver, [1] NAS6604-26 Bolt [R22], and [1] NAS6606-36 Bolt [R44 & R66])

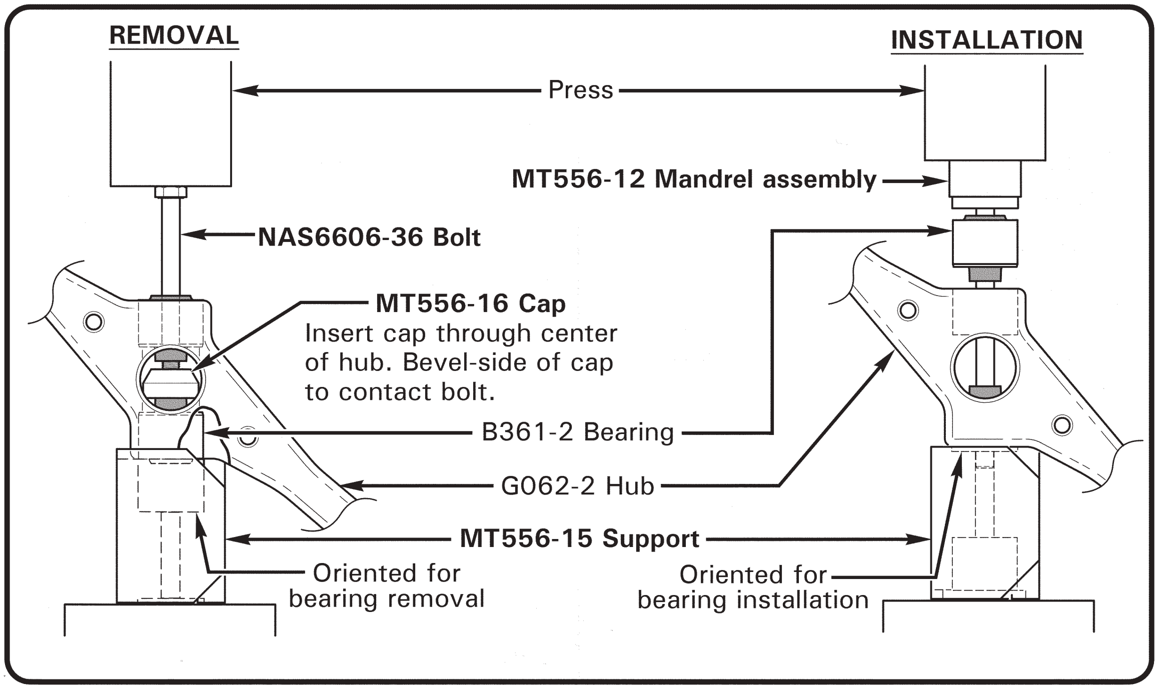

FIGURE 64-10 (EARLIER) MT556-11 (R44 & R66) TAIL ROTOR HUB BEARING REPLACEMENT TOOL KIT

(Kit includes [1] MT556-12 Mandrel assembly, [1] MT556-15 Support, [1] MT556-16 Cap, and [1] AN6-34A Bolt)

64-40 Tail Rotor Hub

64-41 Bearing Replacement

A. Removal

1. Remove tail rotor assembly per § 64-10.
2. Remove tail rotor blades per § 64-20.
3. Refer to Figures 64-9 and 64-10, as applicable. Press bearing(s) from hub using MT556-17 or MT556-11 bearing replacement tools as shown.

B. Installation

1. Inspect tail rotor hub per § 64-42.

> **CAUTION**
>
> Elastomeric bearings are a slight press fit in tail rotor hub bores. Inspect bores for fretting; if fretting is detected, hub is unairworthy.

2. Refer to Figures 64-9 and 64-10, as applicable. Using a cotton or foam tipped applicator, apply light coat of approved primer per § 20-70 to bottom of hub bearing bore. Apply a thin line of primer to center of bearing outside diameter. While primer is wet, press bearing(s) into hub using MT556-17 or MT556-11 bearing replacement tools as shown. Wipe away excess primer.

64-42 Inspection

1. Remove tail rotor blades per § 64-20, and inspect blades per § 64-30.
2. Remove elastomeric bearings per § 64-41.
3. Clean G062-2 tail rotor hub using approved solvent per § 20-70.
4. Visually inspect for indications of damage, wear, nicks, dings, and corrosion. Check arms for straightness, bolt holes for elongation, and bearing bores for fretting or galling. Corrosion is not permitted on clamp-up surfaces.
5. For suspect areas, locally remove paint from hub using approved paint stripper per § 20-70; fluorescent penetrant inspect per § 20-40.
6. Touch-up bare metal using approved materials per § 20-70.
7. Install elastomeric bearings per § 64-41.
8. Install tail rotor blades per § 64-20.

Intentionally Blank

CHAPTER 65

TAIL ROTOR DRIVE SYSTEM

Section	*Title*	*Page*
65-00	Description	65.1
65-10	Tail Rotor Drive Fan Shaft	65.1
65-20	Tail Rotor Drive Shaft Assembly	65.3
65-21	Runout	65.5
65-22	Damper Assembly	65.7
65-30	(Tail Rotor Driveline) Intermediate Flex Plate Shimming	65.8
65-40	Tail Rotor Gearbox Assembly	65.10
65-41	Output Shaft Seal Replacement	65.11
65-42	Input Shaft Seal Replacement	65.12

Intentionally Blank

CHAPTER 65

TAIL ROTOR DRIVE SYSTEM

65-00 Description

The tail rotor driveline consists of an intermediate shaft running aft from the main gearbox and a long tail rotor driveshaft which runs the length of the tailcone. Flexible couplings are located at both ends of the intermediate shaft. The long tail rotor driveshaft has a support bearing at its front end and a damper bearing approximately one-third of the way aft on the shaft. The cooling fan is mounted to the intermediate shaft. The tail gearbox contains a single 90º splash-lubricated spiral-bevel gearset which increases speed to tail rotor RPM.

65-10 Tail Rotor Drive Fan Shaft

Refer to R66 Illustrated Parts Catalog (IPC) Figure 65-1.

> **CAUTION**
>
> Do not damage F196-1 fan shaft aft yoke or G174-1 fanwheel assembly mid plate during fan shaft removal or installation.

A. Removal

1. Remove tailcone cowling assembly per § 53-23.
2. Refer to Figure 65-1. Remove hardware securing F252-1 strut assembly to upper frame assembly and remove strut.
3. Remove hardware securing intermediate C947-3 flex plate assembly to F196-1 (tail rotor) fan shaft aft flange and D224 tail rotor drive shaft assembly forward yoke, noting hardware removed. Remove flex plate, and temporarily support aft portion of fan shaft.
4. Remove hardware securing fan shaft to forward C947-3 flex plate assembly.
5. Remove hardware securing fan shaft to G174-1 fanwheel assembly. Carefully pull fan shaft forward through fanwheel assembly, rotating yoke as necessary. Remove temporary support.

B. Installation

1. Refer to Figure 65-1. Route F196-1 fan shaft aft through fanwheel assembly, rotating yoke as necessary. Install hardware securing fan shaft to G174-1 fanwheel assembly. Standard torque nuts and palnuts per § 20-32, and torque stripe per Figure 5-1.
2. Install hardware securing fan shaft to forward C947-3 plate assembly. Standard torque nuts and palnuts per § 20-32, and torque stripe per Figure 5-1. Shim tail rotor driveline per § 65-30.
3. Install F252-1 strut assembly and hardware securing strut to upper frame assembly. Standard torque nuts per § 20-32 and torque stripe per Figure 5-1.
4. Install tailcone cowling assembly per § 53-23.

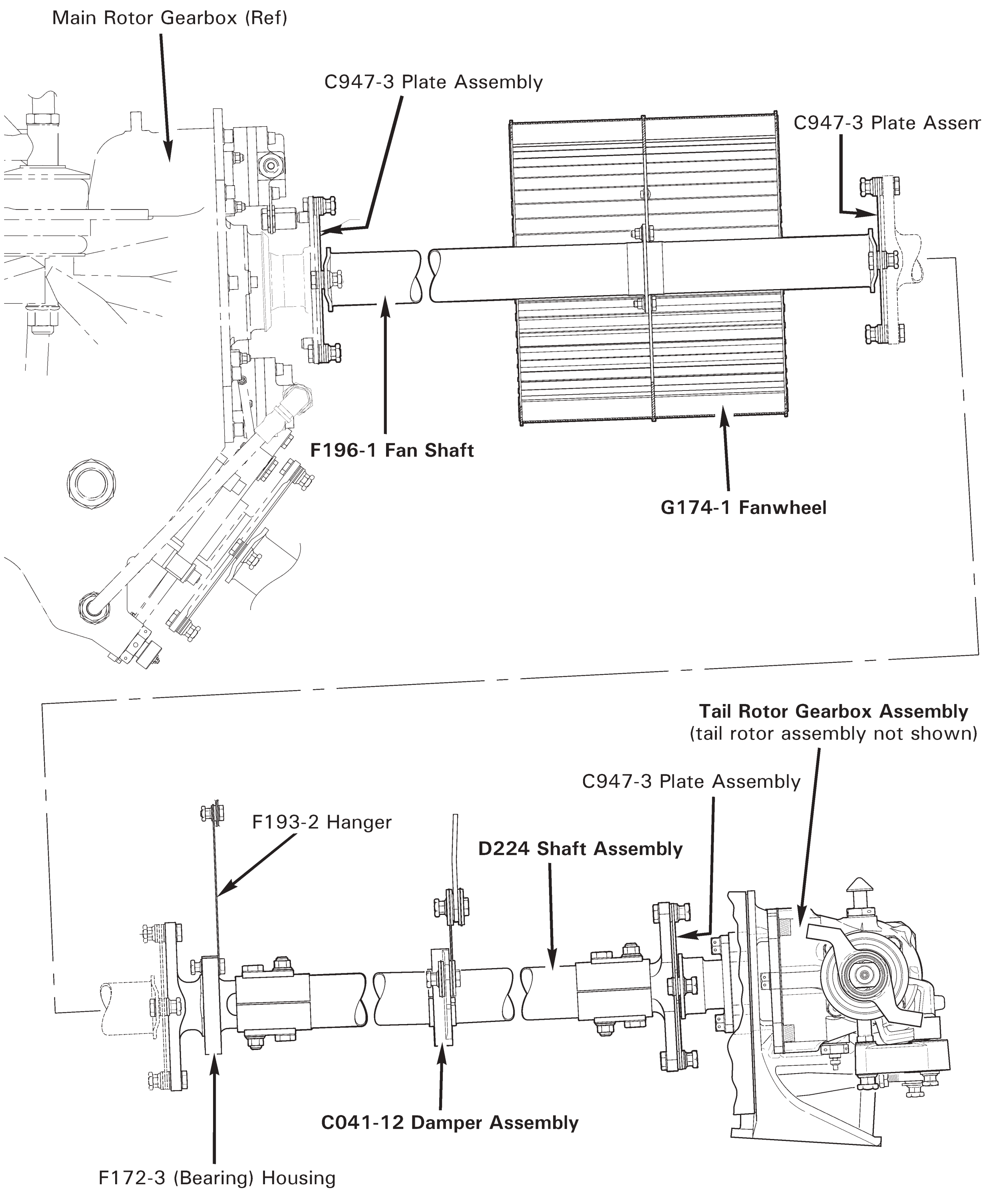

FIGURE 65-1 TAIL ROTOR DRIVELINE

65-20 Tail Rotor Drive Shaft Assembly

A. Removal

1. Remove C023 tailcone assembly per Section 53-40.
2. Refer to Figure 65-1. Remove hardware securing F172-3 (bearing) housing to F193-2 hanger.
3. Refer to Figure 65-3. Using a 3-foot extension, remove bolts securing C041-12 damper assembly arm to D072-1 bulkhead assembly angle. Support forward end of D224 drive shaft assembly.
4. Remove hardware securing A558-2 cover to tailcone and remove cover.
5. Support aft end of drive shaft, and remove hardware securing drive shaft to aft C947-3 plate assembly, noting hardware removed. Carefully pull drive shaft forward through tailcone.

B. Installation

1. Refer to Figure 65-1. Route D224 drive shaft assembly through inside of tailcone. Support drive shaft as required.
2. Install hardware securing drive shaft to aft C947-3 plate assembly, as removed, and remove support. Standard torque fasteners per § 20-32 and torque stripe per Figure 5-1. Install A558-2 cover.
3. Refer to Figure 65-3. Remove forward A231 (tailcone) plug assembly. Estimate longitudinal gap (or interference) between C041-12 damper assembly arm and D072-1 bulkhead assembly angle. If gap (or interference) exceeds 0.12 inch, contact RHC Technical Support. If gap (or interference) is less than 0.12 inch, verify correct damper orientation. Using a 3-foot extension, install bolts securing damper to bulkhead angle. Standard torque bolts per § 20-32 and torque stripe per Figure 5-1. Install plug assembly.
4. Install hardware securing F172-3 (bearing) housing to F193-2 hanger, and remove support. Standard torque bolts per § 20-32 and torque stripe per Figure 5-1.
5. Install C023 tailcone assembly per § 53-40.

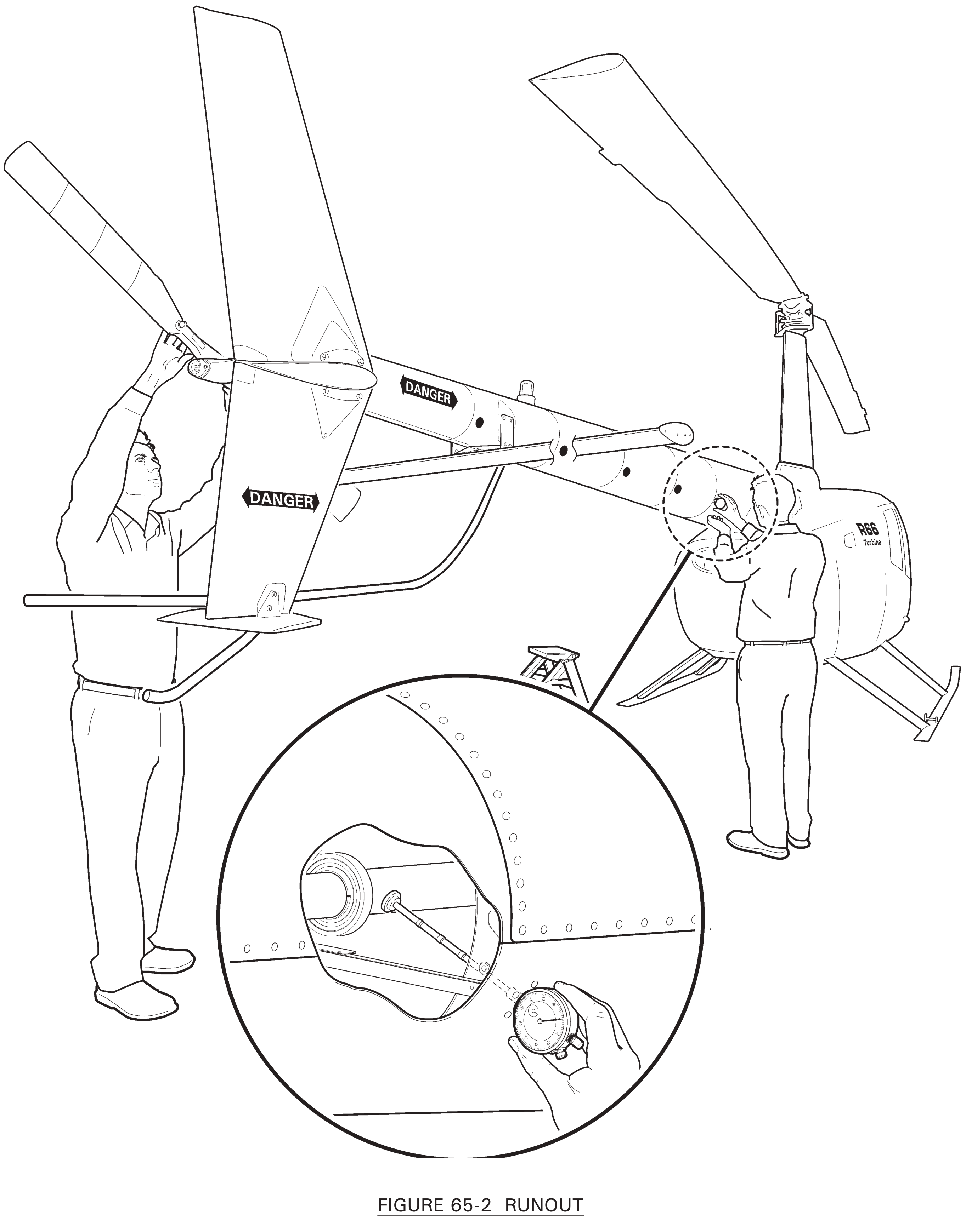

FIGURE 65-2 RUNOUT

65-21 Runout

1. Remove A231 (tailcone) plug assemblies.
2. Assemble MT260-6 tail rotor drive shaft runout tool and a calibrated dial indicator.
3. Refer to Figure 65-2. Using appropriate combination of extension(s), insert tool through tailcone inspection hole. Verify foot squarely contacts tail rotor drive shaft when pressing dial indicator firmly against inspection hole edges. Have a second person rotate rotor system by turning tail rotor hub.
4. Rotate rotor system slowly, smoothly, and for several revolutions until the technician is able to determine the average indicated movement. Maximum runout is 0.025 inch.
5. Repeat steps at each inspection hole. Record values as required (recommended during 100-hour or annual inspection).

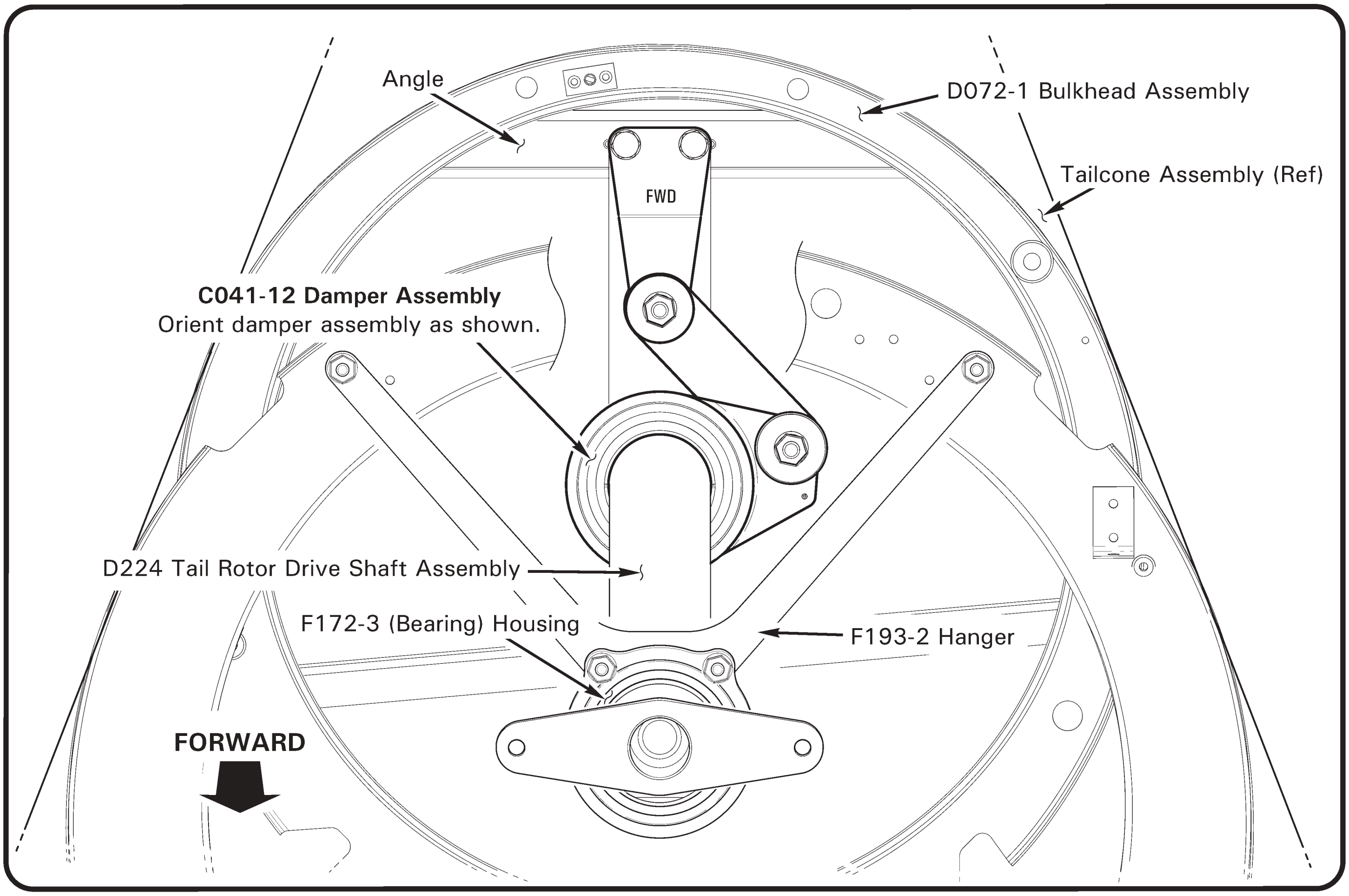

FIGURE 65-3 DAMPER ORIENTATION

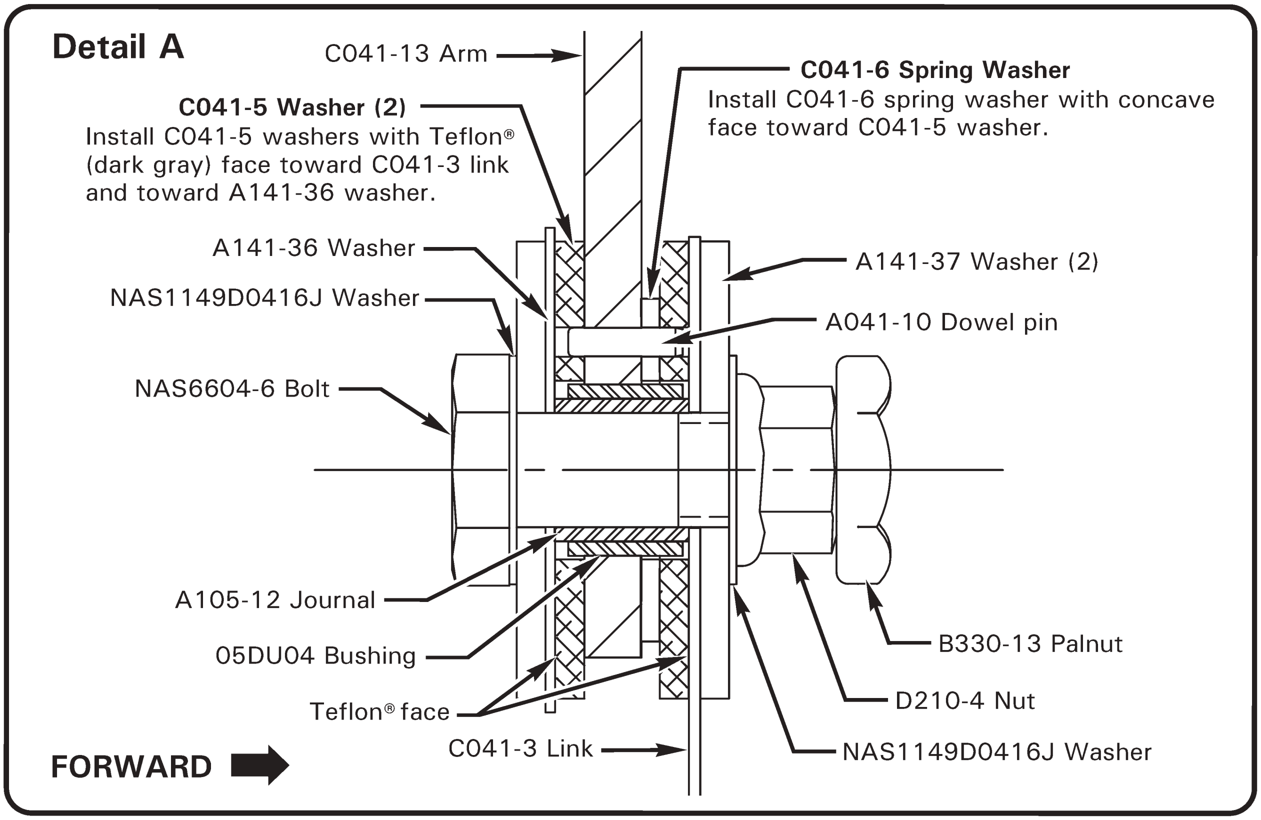

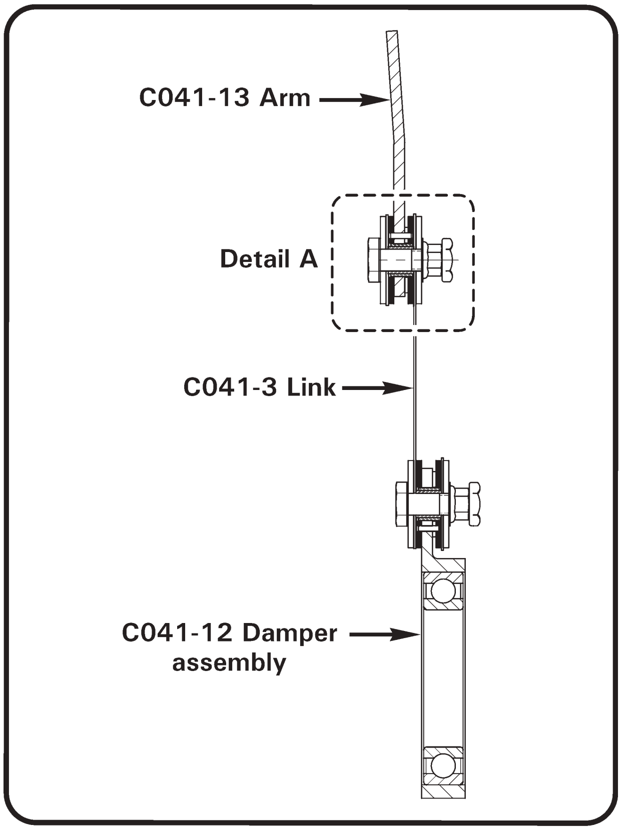

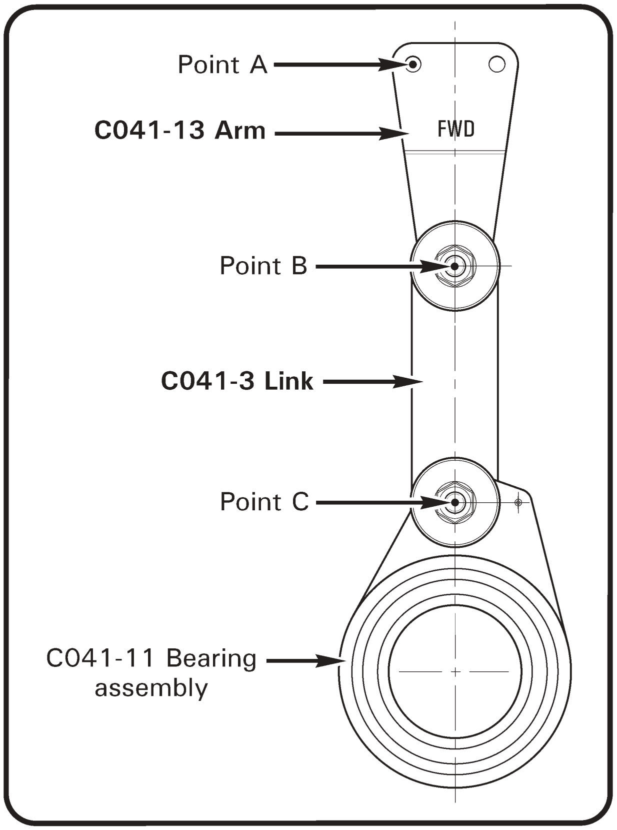

FIGURE 65-4 DAMPER ASSEMBLY

65-22 Damper Assembly

Refer to R66 Illustrated Parts Catalog (IPC) Figure 65-7.

A. Disassembly

1. Remove tail rotor drive shaft per § 65-20, if not previously accomplished.
2. Refer to Figure 65-4. Remove hardware securing C041-11 bearing assembly and C041-13 arm to C041-3 link.

B. Inspection and Assembly

1. Refer to Figure 65-4. Inspect condition of components. Verify no wear on Teflon® (dark gray) face of C041-5 washers. Verify no wear or grooves on A141-36 washers, A141-37 washers, and link. Replace components as required.

> **CAUTION**
>
> Install C041-5 washers with Teflon® face toward C041-3 link and toward A141-36 washer (remove protective coating, if installed).

> **CAUTION**
>
> Install C041-6 spring washer with concave face toward C041-5 washer.

2. Assemble damper. Install hardware securing C041-11 bearing assembly and C041-13 arm to C041-3 link. Align component holes on A041-10 dowel pin(s). Standard torque nuts and palnuts per § 20-32 and torque stripe per Figure 5-1.
3. Attach a calibrated spring scale to Point A. Holding link, verify force required to rotate arm about Point B is 3.5 - 5.8 lb. Adjust as required per Part C.
4. Attach a calibrated spring scale to Point B. Holding bearing assembly, verify force required to rotate link about point C is 2.1 - 3.6 lb. Adjust as required per Part C.

C. Friction Adjustment

> **CAUTION**
>
> Do not adjust damper drag by changing bolt torque.

1. Refer to Figure 65-4. If friction is less than required:
   a. Disassemble C041-12 damper assembly per Part A. Bend C041-6 spring washers to 0.065 - 0.078 inch total height; inspect and reassemble damper assembly per Part B.
   b. If friction is less than required after correcting spring washer height, disassemble damper assembly per Part A. Lap A105-12 journals, as required; inspect and reassemble damper assembly per Part B.
2. If friction is greater than required:
   a. Disassemble damper assembly per Part A. Flatten C041-6 spring washers slightly; inspect and reassemble damper assembly per Part B.
3. Install tail rotor drive shaft per § 65-20.

65-30 (Tail Rotor Driveline) Intermediate Flex Plate Shimming

> NOTE
>
> The tail rotor driveline is shimmed for minimal preload.

1. Refer to Figure 65-1. If not previously accomplished, remove hardware securing intermediate C947-3 flex plate assembly to F196-1 (tail rotor) fan shaft aft flange and D224 tail rotor drive shaft assembly forward yoke. Remove flex plate, and temporarily support aft portion of fan shaft.

2. Measure flex plate thickness at bonded washers (4 places) to determine average thickness:

   (1st place) ______________ inch

   (2nd place) + ______________ inch

   (3rd place) + ______________ inch

   (4th place) + ______________ inch

   Total = ______________ inch

   Total ÷ 4 = ______________ inch **(Flex plate average thickness)**

3. a. Position F196-1 fan shaft aft flange arms and D224 tail rotor drive shaft assembly forward yoke flange arms at 3 o'clock and 9 o'clock positions (horizontal). Measure gap between arms to determine average gap:

   (3 o'clock position) ______________ inch

   (9 o'clock position) + ______________ inch

   Total = ______________ inch

   Total ÷ 2 = ______________ inch **(Average gap between flange arms)**

   b. Rotate D224 tail rotor drive shaft assembly 180°, and repeat step a:

   (3 o'clock position) ______________ inch

   (9 o'clock position) + ______________ inch

   Total = ______________ inch

   Total ÷ 2 = ______________ inch **(Average gap between flange arms)**

4. Evaluate flange straightness by calculating the difference between the 3 o'clock positions in steps 3a and 3b. Also calculate the difference between the 9 o'clock positions in steps 3a and 3b. If either calculated difference exceeds 0.015 inch, either one or both flanges are bent and require replacement.

65-30 (Tail Rotor Driveline) Intermediate Flex Plate Shimming (continued)

5. Using the smaller average gap from step 3a or 3b, subtract the flex plate average thickness determined in step 2:

Smaller average gap between flange arms (step 3a or 3b) ____________ inch

Subtract flex plate average thickness (step 2) − ____________ inch

Total = ____________ inch

6. Select shims per Table 65-1 and install intermediate C947-3 flex plate assembly. Standard torque nuts and palnuts per § 20-32 and torque stripe per Figure 5-1. Remove F196-1 (tail rotor) fan shaft temporary support.

WARNING

Shim both arms of flanges equally. All fasteners must meet torque requirements given in § 20-33.

Calculated Dimension	Shim required between intermediate C947-3 flex plate and F196-1 fan shaft aft flange	Shim required between intermediate C947-3 flex plate and D224 tail rotor drive shaft forward yoke
−0.017 or greater negative number	NAS1149F0432P washer between forward C947-3 flex plate assembly and F908-1 yoke assembly and/or F196-1 fan shaft forward flange may be relocated under nut as required to achieve −0.016 / +0.016 inch calculated dimension. Relocate washers as required, and repeat steps 3 thru 6.	
−0.016 / +0.016 in.	None	None
+0.017 / +0.047 in.	NAS1149F0432P washer	None
+0.048 / +0.079 in.	NAS1149F0432P washer	NAS1149F0432P washer
+0.080 / +0.110 in.	NAS1149F0463P washer	NAS1149F0432P washer
+0.111 / +0.141 in.	NAS1149F0463P washer	NAS1149F0463P washer
+0.142 or greater positive number	NAS1149F0432P washer between forward C947-3 flex plate assembly and F908-1 yoke assembly and/or F196-1 fan shaft forward flange may be exchanged with NAS1149F0463P washer as required to achieve −0.016 / +0.016 inch calculated dimension. Exchange washers as required, and repeat steps 3 thru 6.	

TABLE 65-1 TAIL ROTOR DRIVELINE

7. Measure fanwheel-to-inlet gaps per § 79-11.

65-40 Tail Rotor Gearbox Assembly

Refer to R66 Illustrated Parts Catalog (IPC) Figure 65-9.

A. Removal

> NOTE
>
> Drain tail rotor gearbox oil per § 12-21 prior to gearbox removal, or keep gearbox vertical after removal to avoid oil escape thru filler-vent plug.

1. Remove hardware securing push-pull tube assembly to bellcrank assembly.
2. As required, remove tail rotor assembly per § 64-10. As required, remove hardware securing bellcrank to tail rotor gearbox assembly output cartridge. Slide (assembled) bellcrank, pitch control assembly, and pitch links off of gearbox output shaft.
3. Remove hardware securing A558-2 cover to tailcone and remove cover.
4. Support aft end of D224 drive shaft assembly, and remove hardware securing gearbox input yoke to aft C947-3 plate assembly, noting hardware removed.
5. Cut and discard ty-raps as required and disconnect chip detector wiring at plastic connector.
6. Remove hardware securing gearbox to tailcone casting and remove gearbox.

B. Installation

1. Position tail rotor gearbox assembly on tailcone casting and install mounting hardware. Special torque screws per § 20-33 and torque stripe per Figure 5-1.
2. Connect chip detector wiring at plastic connector and install ty-raps, as required. Cinch ty-raps until snug without over-tightening, and trim tips flush with heads.
3. Install hardware securing gearbox input yoke to aft C947-3 plate assembly, and remove support. Shim tail rotor driveline per § 65-30. Standard torque bolts per § 20-32 and torque stripe per Figure 5-1. Install A558-2 cover.
4. If removed, slide (assembled) bellcrank assembly, pitch control assembly, and pitch links onto gearbox output shaft. Install hardware securing bellcrank to gearbox output cartridge. Standard torque bolts per § 20-32 and torque stripe per Figure 5-1. Shim pitch control per § 67-62, as required.
5. Install hardware securing push-pull tube assembly to bellcrank. Standard torque fastener per § 20-32 and torque stripe per Figure 5-1.
6. If removed, install tail rotor assembly per § 64-10.
7. Service tail rotor gearbox per § 12-21, as required.

65-41 Output Shaft Seal Replacement

Refer to R66 Illustrated Parts Catalog (IPC) Figure 65-13.

1. Remove tail rotor assembly per Section 64-10.
2. Remove hardware securing push-pull tube assembly to bellcrank assembly.
3. Remove hardware securing bellcrank to tail rotor gearbox assembly output cartridge. Slide (assembled) bellcrank, pitch control assembly, and pitch links off of gearbox output shaft.
4. Cut and discard safety wire securing C112-2 cap retaining hardware. Remove hardware securing cap to gearbox and remove cap with C966-2 seal and C215-133 o-ring.

CAUTION

Do not remove shims between cap and gearbox assembly. Shims control output shaft drag.

5. Using hydraulic press, press old seal from cap. Remove and discard o-ring. Clean and dry cap, especially seal seating surface and o-ring groove.
6. Verify open face of seal points toward gearbox and press new seal into cap bore 0.160 inches from external surface. Lightly coat new o-ring with A257-22 oil and install in cap.
7. Lightly coat output shaft seal seating area with A257-22 lubricant and slide cap onto shaft. Install hardware securing cap to gearbox and special torque bolts per Section 20-33. Install 0.032-inch diameter lockwire through hardware and safety in pairs.
8. Slide (assembled) bellcrank assembly, pitch control assembly, and pitch links onto gearbox output shaft. Shim pitch control per Section 67-62, as required.
9. Install hardware securing push-pull tube assembly to bellcrank. Standard torque fastener per Section 20-32 and torque stripe per Figure 5-1.
10. Install tail rotor assembly per Section 64-10.

65-42 Input Shaft Seal Replacement

Refer to R66 Illustrated Parts Catalog (IPC) Figure 65-13.

1. Remove tail rotor gearbox per Section 65-40. Tail rotor assembly and pitch control assembly removal are not required.

2. Remove and discard cotter pin securing tail rotor input yoke retaining nut. On a suitable work bench, place a wood block between yoke and gearbox housing to prevent tail rotor rotation; remove castellated nut, washer, and yoke.

3. Cut and discard safety wire securing C112-1 cap retaining hardware. Remove hardware securing cap to gearbox and remove cap with A966-3 seal and C215-140 o-ring.

CAUTION

Do not remove C141-2 washer between cap and bearing.

4. Using hydraulic press, press old seal from cap. Remove and discard o-ring. Clean and dry cap, especially seal seating surface and o-ring groove.

5. Verify open face of seal points toward gearbox and press new seal into cap bore 0.25 inch from external surface. Lightly coat new o-ring with A257-22 oil and install in cap.

6. Install cap, and hardware securing cap to gearbox; special torque bolts per Section 20-33. Install 0.032-inch diameter lockwire through hardware and safety in pairs.

7. Install input yoke, washer, and castellated nut onto gear shaft. Place wood block between yoke and gearbox housing to prevent tail rotor rotation, special torque nut per Section 20-33, and install new MS24665-210 cotter pin.

8. Install tail rotor gearbox per Section 65-40.

CHAPTER 67

FLIGHT CONTROLS

Section	Title	Page
67-00	Description	67.1
67-10	Cyclic Controls	67.1
67-11	Cyclic Control Assembly	67.1
67-12	Cyclic Grip Assembly	67.4
67-13	Cyclic Friction Assembly	67.6
67-20	Collective Control	67.6
67-21	Collective Stick Assembly	67.6
67-22	Collective Friction	67.8
67-30	Jackshaft and Strut Assembly	67.8
67-31	Jackshaft	67.8
67-40	Swashplate	67.9
67-41	Swashplate Tilting Friction Adjustment	67.11
67-42	Upper and Lower Scissor Assemblies	67.11
67-50	Tail Rotor Controls	67.13
67-51	Pedals	67.13
67-52	Pitch Control	67.14
67-60	Bellcranks	67.15
67-61	C317-5 or C317-9 Bellcrank	67.15
67-62	C317-7 Bellcrank	67.16
67-63	F316-1 Bellcrank	67.17
67-64	A331-4 Bellcrank	67.18
67-65	A120-5 Bellcrank	67.18

Intentionally Blank

CHAPTER 67

FLIGHT CONTROLS

67-00 Description

Dual controls, which are removable on the left side, are standard equipment. All primary controls are actuated through push-pull tubes and bellcranks. Bearings used throughout the control system are either sealed ball bearings or have self-lubricated Teflon® liners.

R66 flight controls operate conventionally. The cyclic stick appears different, but the grip moves the same as in other helicopters due to the free hinge at the center pivot. The cyclic grip is free to move vertically allowing the pilot to rest his forearm on his knee if he chooses.

The collective control is also conventional. A twist grip provides input to the engine fuel control, and raising or lowering the collective provides power turbine governor inputs via an interconnecting linkage.

Pilot-side tail rotor pedals are adjustable. To adjust, extract quick-release pin on each pedal by depressing button and pulling. Slide pedal fore or aft to most comfortable of three adjustment positions, and reinstall quick-release pin. Verify pins secure before flight.

See R66 Pilot's Operating Handbook (POH) Section 7 for instructions to remove (removable) flight controls.

See Section 67-50 for hydraulic system description.

WARNING

Assembly of flight controls is critical and requires inspection by a qualified person. If a second person is not available, the installer must take a 5-minute break prior to inspecting flight control connections he has assembled.

67-10 Cyclic Controls

Refer to R66 Illustrated Parts Catalog (IPC) Chapter 67.

67-11 Cyclic Control Assembly

A. Removal

1. Refer to Section 6-70. Remove F794-1 (forward) and F794-2 (aft) belly panels, F680-3 (pilot collective) and F445-1 (forward tunnel) cover assemblies, and F461-1 (collective cross tube) and F463-1 (aft tunnel) cover assemblies. Open upper console, disconnect OAT gage and hourmeter wiring connectors, and remove radio faceplate. Remove plastic hole plug from vertical keel panel beneath RH, aft seat.

2. Turn cyclic friction OFF. Gently punch out cyclic friction knob spring pin and remove knob. Remove hardware securing F444-1 cover assembly to F338-1 box, unsnap boot, and lift cover assembly to expose wire harness connectors. Disconnect anti-ice, pitot heat, and ELT switch (if installed) wiring. Snap boot together at top of cyclic stick to secure cover. Install pin on cyclic friction shaft to retain spacers.

3. Refer to Figure 67-1. Unhook D918-1 cord assembly from C069-8 (cyclic) stick assembly and D918-2 cord assembly from C177-5 pivot assembly.

4. Disconnect wiring exiting D320-8 stick at connectors near bottom of stick.

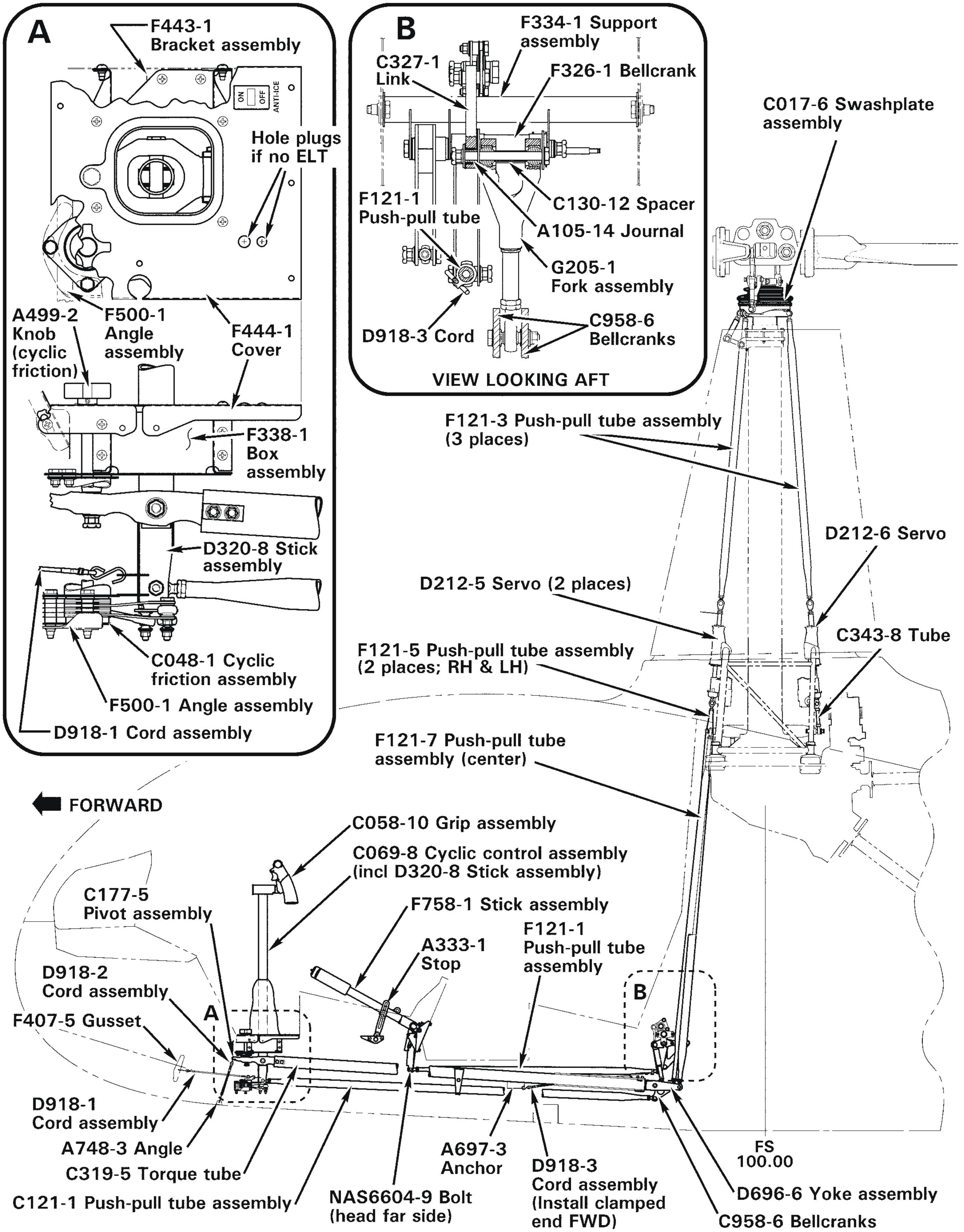

FIGURE 67-1 MAIN ROTOR FLIGHT CONTROLS

67-11 Cyclic Control Assembly (continued)

A. Removal (continued)

5. Remove hardware securing C121-1 push-pull tube assembly to D320-8 stick assembly. Remove hardware securing C319-5 torque tube assembly to C177-5 pivot assembly. Move push-pull tube and torque tube assemblies aft, and protect from scratching.
6. Disconnect, but do not remove, two bolts securing cyclic friction assembly to cabin. Apply some cyclic friction to keep plates assembled.
7. Remove screws securing F338-1 cyclic box to cabin. Lift and remove cyclic control assembly with attached cyclic box and friction assembly. Install nuts onto two cyclic friction assembly bolts, hand tight, to retain bolts and spacers.
8. Remove hardware securing both outboard, vertical F121-5 push-pull tube assemblies and C130-47 spacer to D696-6 yoke assembly.
9. Remove hardware securing center, vertical F121-7 push-pull tube assemblies to C958-6 bellcrank.
10. Remove hardware securing G205-1 fork assembly to F334-1 support assembly.
11. Pull D175-5 cyclic pivot assembly (torque tube, yoke, bellcranks, fork, and push-pull tube assembly) aft through belly.

B. Installation

1. Refer to Figure 67-1. Verify center-to-center distance between rod end and spherical bearings in G205-5 fork is 5.40 ± 0.03 inches; adjust as required. Standard torque jam nut and palnut per Section 20-32. Install C175-5 cyclic pivot assembly (torque tube, yoke, bellcranks, fork, and push-pull tube assemblies) thru aft belly.
2. Connect G205-1 fork assembly to F326-1 bellcrank and standard torque bolt per Section 20-32.
3. Connect lower end of center F121-7 push-pull tube to C958-6 bellcranks and standard torque bolt per Section 20-32.
4. Connect lower ends of both outboard F121-6 push-pull tubes to D696-6 yoke using a NAS6605-46 bolt and C130-47 spacer and standard torque per Section 20-32. Install plastic hole plug in vertical keel panel beneath RH, aft seat.
5. Remove temporary nuts from cyclic friction assembly bolts. Position cyclic box with attached cyclic control and friction assemblies between keel panels. Install all screws fastening cyclic box to cabin. Fasten cyclic friction assembly to cabin and standard torque bolts per Section 20-32.
6. Connect C319-5 torque tube assembly to C177-5 pivot and standard torque bolts per Section 20-32.
7. Connect forward end of C121-1 push-pull tube to D320-8 cyclic stick and standard torque bolts per Section 20-32.

67-11 Cyclic Control Assembly (continued)

B. Installation (continued)

8. Connect all electrical plugs at bottom of cyclic stick. Ensure protective sleeving covers maximum amount of wiring possible and sleeving ends are secured with lacing tape.
9. Connect D918-1 cord to D320-8 cyclic stick. Connect D918-2 cord to C177-5 pivot.
10. Move cyclic control through all positions and verify operating and no binding.
11. Install radio face plate, connect OAT gage and hourmeter wiring connectors, and ty-rap as required. Close and secure upper console.
12. Connect cyclic box cover anti-ice, pitot heat (if installed), and ELT (if installed) switch wiring connectors and secure cover.
13. Install cyclic friction knob and secure with spring pin. Close and secure cyclic stick boot.
14. Install F794-1 (forward) and F794-2 (aft) belly panels, F680-3 (pilot collective) and F445-1 (forward tunnel) cover assemblies, and F461-1 (collective cross tube) and F463-1 (aft tunnel) cover assemblies.

67-12 Cyclic Grip Assembly

A. Removal

NOTE
This may be accomplished without removal of complete cyclic assembly from rotorcraft.

1. Remove forward belly panel.
2. Refer to Figure 67-1. Disconnect wiring connectors attached to wiring exiting base of D320-8 cyclic stick. Using pin extractor, remove pins from housings (wires 112, 138, & 355 may remain installed) and retain housings. Remove lacing tape from both ends of protective sleeving covering wires exiting base of stick assembly. Attach a 3 foot length of safety wire or wire lacing tape to one removed pin.
3. As required, rotate grip assembly by pushing in on spring-loaded stop pin so exposed wire loom does not wrap around top of D320-8 cyclic stick. Remove circular plug, D684-1 spring, cotter pin, castellated nut, and washer where grip assembly attaches to D320-8 cyclic stick.
4. Remove grommet atop cyclic stick at grip assembly wiring entrance. With a soft-faced hammer, gently tap cyclic grip assembly pivot and remove grip assembly and attached wiring from stick assembly. Ensure safety wire or lacing attached to internal wiring protrudes from top and bottom of stick assembly. Also, ensure pivot bearings remain with stick assembly.

NOTE
Do not damage bearings while removing.

67-12 Cyclic Grip Assembly (continued)

B. Installation

1. Refer to Figure 67-1. Ensure protective sleeving covers wires exiting grip assembly with one grommet in grip and one (for cyclic stick) on wire bundle (spare grommets may be installed if desired).

2. Slide grip assembly into bearings in stick assembly. Install washer, castellated nut and cotter pin.

> **CAUTION**
>
> Tighten castellated nut only until there is no axial movement of bearings and cyclic grip assembly. Overtightening nut will damage bearings.

3. Install D684-1 spring so that when grip assembly is rotated one turn clockwise, with co-pilot grip removed, pilot grip (tube) will float just above horizontal and stay full-up when placed full-up. Install circular plug.

4. Temporarily attach grip assembly wiring to safety wire (or lacing) exiting atop cyclic stick. Carefully pull wires thru cyclic stick. Install grommet, included with grip assembly wiring, into cyclic stick wiring entrance hole. Remove safety wire (or lacing).

5. Position protective sleeving on wiring exiting cyclic stick bottom to cover maximum amount of wiring possible. Secure sleeving ends with lacing tape.

6. Install pins on each wire into proper position in housings. Refer to Figure 98-2 for pin positions.

7. Connect cyclic and airframe wiring and ty-rap. Move cyclic control through all positions and verify clearance and no binding.

8. Turn BATTERY switch on and verify correct function of all switches on grip assembly and cyclic stick.

9. Install forward belly panel.

67-13 Cyclic Friction Assembly

NOTE

The cyclic friction assembly is located below the forward left corner of the cyclic box. Turning friction knob clockwise applies friction to both longitudinal and lateral cyclic axes. Adjustment is required if friction cannot be applied.

A. Friction Adjustment

1. Turn friction knob counter-clockwise until it stops.
2. Remove roll pin connecting knob to shaft.
3. Lift knob off shaft.
4. Install NAS1149F0432P or NAS1149F0463P washers under knob washer, as required, so knob rotates 1/8 to 1 turn before adding friction. With friction off, force at grip to move cyclic shall not exceed 1.75 pounds longitudinal and lateral within hydraulic servo deadbands.
5. Replace knob and install roll pin.
6. Move flight controls throughout complete travel. Verify no binding.

67-20 Collective Control

67-21 Collective Stick Assembly

A. Removal

1. Refer to Figure 67-1. Disconnect A333-1 collective-travel stop from F348-1 anchor by removing NAS6603 bolt at bottom of stop. Position stop parallel to collective stick and apply collective friction.
2. Refer to Figure 6-8. Remove F445-1 forward tunnel cover, F680-3 pilot's collective cover, F680-1 co-pilot's collective cover, F463-1 mid-tunnel cover, and F461-1 collective cross tube cover.
3. Pivot pilot's seat bottom to the open position. Remove bolt securing inboard end of collective stick to pilot's seat structure. Refer to Figure 76-1. Disconnect throttle control inner wire from A462-4 fitting at outboard end of collective. Remove three screws securing C522-10 throttle control to collective cross tube.
4. Disconnect wiring exiting aft end of center collective stick from airframe harness connector. Remove ty-raps as required.
5. Disconnect forward end of F121-1 push-pull tube from collective stick assembly.
6. Remove bolt securing outboard end of collective stick to F303-1 support. Remove two remaining screws securing F303-1 support to cabin. Slide support, with attached micro-switches, down to allow aft movement of collective stick.
7. Pivot pilot's seat bottom to the open position. Remove bolt securing collective stick assembly to pilot's seat structure.
8. Carefully move collective stick assembly aft and remove from helicopter.

67-21 Collective Stick Assembly (continued)

B. Installation

1. Refer to Figure 67-1. Position A333-1 collective-travel stop parallel to collective stick and apply collective friction. From aft side of co-pilot's seat, carefully position collective stick assembly in helicopter.
2. Pivot pilot's seat bottom to the open position. Install bolt from inside pilot's seat structure thru bearing block into tunnel and secure to inboard end of collective stick assembly. Standard torque bolt, install palnut, and torque stripe per Figure 5-1.
3. At outboard end of collective stick, slide F303-1 support, and attached micro-switches, up behind collective cross tube and secure support to cabin with two screws.
4. Install journal in outboard pivot bearing of collective stick assembly. Position journal & bearing between flanges of F303-1 support and insert NAS6604 bolt. Standard torque bolt per § 20-32, install palnut, and torque stripe per Figure 5-1.
5. Connect forward end of F121-1 push-pull tube to collective stick assembly with NAS6604 bolt head on outboard (right) side (nut side inboard). Standard torque bolt per § 20-32, install palnut, and torque stripe per Figure 5-1.
6. Refer to Figure 6-8. Slide F680-3 collective cover over center collective stick aft of friction assembly.
7. Insert A130-4 spacer into lower end of A333-1 collective-travel stop. Position spacer and stop in F348-1 anchor. Install NAS1149F0432P and 0463P washers on spacer on either side of stop as required to obtain 0.001/0.035 inch axial play and align stop with collective. Secure stop to anchor with NAS6603 bolt, standard torque per § 20-32, install palnut, and torque stripe per Figure 5-1. Move collective up & down and verify no binding of stop.

CAUTION

NAS6604-9 bolt connecting forward end of F121-1 push-pull tube to collective must be installed so bolt head is toward right side of helicopter. Refer to Figure 67-1.

8. Connect wiring exiting center collective stick to airframe wire harness connector. Secure connector to airframe harness with Ty-raps as required. Move collective up & down and verify wiring clearance with no strain.
9. Refer to Figure 76-1. Secure C522-10 throttle control to collective cross tube with three clamps and screws. Position control inner wire in A462-4 fitting and rig per § 76-11.
10. Refer to Figure 6-8. Install and secure F445-1 forward tunnel cover, F680-3 pilot's collective cover, F680-1 co-pilot's collective cover, F463-1 mid-tunnel cover, and F461-1 collective cross tube cover.
11. Adjust collective friction per § 67-22.

67-22 Collective Friction

Adjust friction on F334-1 to produce a force within servo dead bands of 4–5 lb when pulling up at collective grip with friction on collective full off, then adjust friction on collective as required to produce a force of 18-22 lb when pulling up at grip when full on.

67-30 Jackshaft and Strut Assembly

67-31 Jackshaft

A. Removal

> NOTE
>
> Rigging check is not necessary if jackshaft support rod end and push-pull tube lengths are not altered.

1. Disconnect push-pull tubes from F339-1 jackshaft.
2. Disconnect two bolts connecting jackshaft to G201-1 frame.
3. Remove jackshaft.

B. Installation

1. Ensure A105-6 journal is installed in jackshaft aft support on G201-1 frame. Position F339-1 jackshaft on G201-1 frame and install bolts. Standard torque bolts per § 20-32, install palnuts, and torque stripe per Figure 5-1.
2. Insert bolt forward thru forward jackshaft arm and connect to upper end of F121-7 push-pull tube. Install A115-1 spacer, A214-3 washer and nut. Standard torque bolt per § 20-32, install palnut, and torque stripe per Figure 5-1.
3. Insert bolt aft thru aft jackshaft arm and connect to lower rod end on C343-8 tube. Install A115-1 spacer, A214-3 washer and nut. Standard torque bolt per § 20-32, install palnut, and torque stripe per Figure 5-1.
4. Verify no binding and/no interference with control system exists throughout flight control travel.

67-40 Swashplate

A. Removal

> NOTE
>
> Rigging check is not required if push-pull tube rod end center-to-center dimension does not change.

1. Remove main rotor blades and hub per §§ 62-10 and 62-20.
2. Atop of C251 main rotor drive shaft, remove D226 brackets, D151 teeter stops, and C150 droop stops by removing NAS6608 bolt.
3. Disconnect upper C204 arm from C203 yokes.
4. Disconnect and remove C203 yokes, A210 key, and chord arm weights.
5. Remove swashplate boot by cutting plastic ty-raps.
6. Disconnect three push-pull tubes and A205 fork assembly from lower (non-rotating) swashplate.
7. Lift swashplate with attached fork and pitch links off slider tube and remove from helicopter.

B. Installation

1. Install swashplate onto slider tube assembly. Connect lower scissors' fork to left side of middle of three lugs on lower, non-rotating swashplate. Connect aft push-pull tube to right side of aft, single lug on lower swashplate. Standard torque bolts per § 20-32. Install palnuts and standard torque per § 20-32.
2. Verify swashplate tilting friction per § 67-41; adjust as required.
3. Slide swashplate boot over main rotor drive shaft and set in place.
4. Install C203 yokes on C251 main rotor drive shaft upper flange using A210 key to index yokes to shaft. Finger tighten clamping hardware.

> NOTE
>
> Round edge of A210 key to fit into drive shaft flange indexing slot.

5. Standard torque NAS6605 bolt thru yokes and A210 key first per § 20-32. Install palnuts and standard torque per § 20-32.
6. Standard torque bolt thru yokes opposite A210 key per 20-32. A slight gap between yokes opposite A210 key is normal.
7. Install previously removed chord arm weights and standard torque bolt per § 20-32. Install palnut, standard torque per §20-32, and torque stripe per Figure 5-1.

67-40 Swashplate (continued)

B. Installation (continued)

8. If required, fill remainder of rod end threaded hole in upper A205 fork with B270-4 or −13 sealant (see § 20-70).
9. With bolt heads in direction of rotation, connect upper A205 fork to upper C204 arm and connect arm to C203 yokes. Standard torque bolts per § 20-32. Verify 0.001/0.005 inch axial play in both pivots; adjust C117 shim thickness between nut-side journal & thrust washer as required. Verify bolt, arm, and clamped hardware in upper scissor's pivots rotate together. Install palnuts, standard torque per § 20-32, and torque stripe per Figure 5-1.
10. Verify bolt, arm, and clamped hardware in lower scissor's pivots rotate together. Connect forward push-pull tube rod ends to remaining lower lugs on swashplate and standard torque bolts per § 20-32. Install palnut, standard torque per § 20-32, and torque stripe per Figure 5-1.
11. Connect upper A205 fork rod end and lower rod end of C258 pitch link to interrupter-side swashplate ear and standard torque bolt per § 20-32. Install palnut, standard torque per § 20-32, and torque stripe per Figure 5-1.
12. Position swashplate boot on rotating swashplate with inner lip contacting C203 yoke. Secure with ty-raps.
13. Attach two A255-3 counterweights and lower rod end of C258 pitch link to swashplate ear opposite interrupter and standard torque bolt per § 20-32. Install palnut, standard torque per § 20-32, and torque stripe per Figure 5-1.
14. Install main rotor hub and blades per §§ 62-10 and 62-20.
15. Verify safety washers (or counterweight) and C115 spacers installed on all rod ends per Figure 5-1. Torque stripe fasteners per Figure 5-1.
16. Verify no interference with control movement throughout flight control travel and swashplate movement corresponds with cyclic and collective movement.
17. Track and balance main rotor per § 18-10.

67-41 Swashplate Tilting Friction Adjustment

Swashplate tilting friction is established by C197-1 through C197-6 shims controlling clamping force of Teflon®-lined sleeves on the ball assembly.

1. Mark for reassembly and disconnect boot, pitch links and drive linkage (scissors) from upper swashplate and both forward push-pull tubes from lower swashplate.

2. Align upper swashplate arms with lateral axis of helicopter and center cyclic stick. Using MT359-1 spring scale (or equivalent) connected to upper swashplate arm bolt hole, pull down and note scale reading while swashplate is moving; do not use breakaway reading. Force required to tilt swashplate must be free-without-looseness minimum to 5 pounds maximum.

3. To adjust friction, remove outer screws from upper swashplate and raise and secure retainers to allow access to inner screws on lower, non-rotating swashplate. Remove inner screws securing sleeve to lower swashplate.

4. Raise sleeve and measure thickness of C197 shim stack. Adjust shim stack thickness as required to achieve proper tilting friction. Decreasing shim stack thickness increases tilting friction while increasing spacer stack thickness decreases tilting friction. Install, and special torque per § 20-33, all inner screws on lower swashplate and at least two screws thru retainers in upper swashplate prior to measuring tilting friction.

5. Connect both forward push-pull tubes to lower swashplate and standard torque per § 20-32. Install palnut, special torque per § 20-33, and torque stripe per Figure 5-1.

6. Connect both pitch links and drive linkage to upper swashplate (interrupter on same side as drive linkage) and standard torque per § 20-32. Install palnuts, special torque per § 20-33, and torque stripe per Figure 5-1.

67-42 Upper and Lower Scissor Assemblies

A. Bearing Removal

C648-2 journal bearings may be removed with a press. Press from inner side of bearings while supporting outboard side of yoke or fork. Use a socket or other suitable pressing tool to apply the force.

B. Bearing Installation

1. Clean mating surfaces of A205 fork or C203 yoke where C648 bearing is installed. Deburr any sharp edges that may damage bearings during installation.

2. Coat yoke or fork bearing bores with zinc chromate or epoxy primer. While primer is still wet, press in C648-2 bearing while supporting backside of fork or yoke.

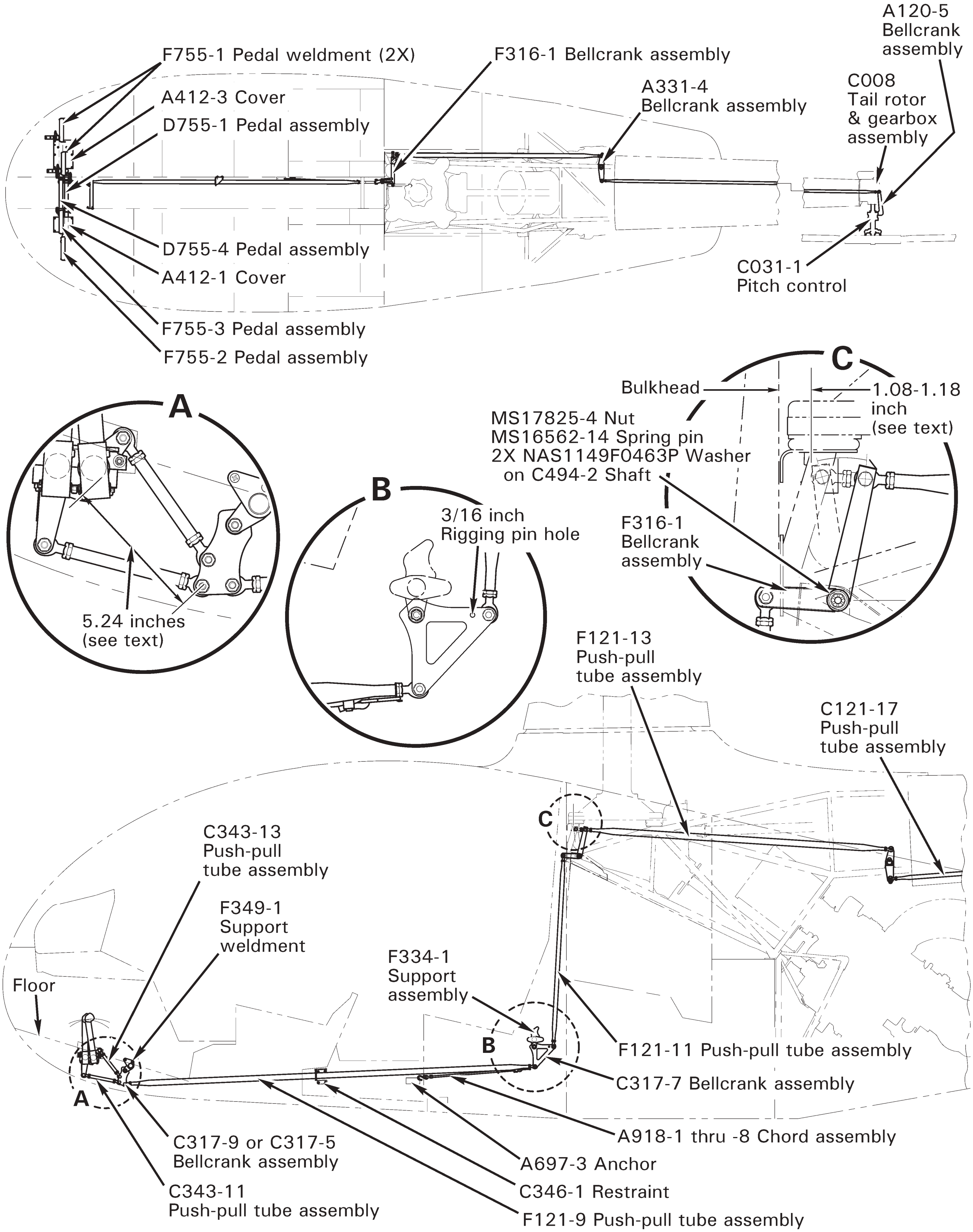

FIGURE 67-3 TAIL ROTOR FLIGHT CONTROLS

67-50 Tail Rotor Controls

67-51 Pedals

A. Removal

1. Peel back carpet as required to access pedal covers per § 25-30 Part D.
2. Remove screws securing pedal covers to cabin floor and remove covers.
3. Remove screws securing upper console to side panels; pivot console up and aft.

> **CAUTION**
>
> Do not change the length of or remove rod ends from C343-11 and -13 push-pull tube assemblies.

4. Remove hardware securing D755 pedal assemblies to C343-11 and -13 push-pull tube assemblies.

> NOTE
>
> Pedal bearing blocks (upper and lower) are a machined, matched set as indicated by matching letter or number on the upper and lower portion of blocks. DO NOT mix them or alignment problems may develop on installation.

5. Remove bolts securing A318-1 and -2 bearing block halves together and remove lower bearing blocks.
6. Remove pedal assemblies one at a time by lifting one end and lowering other into chin. Remove pedals thru pilot-side opening.

> NOTE
>
> On reassembly, the right pedal assembly is mounted forward in the bearing blocks and the left is mounted aft.

B. Installation

1. Fill the grooves in the pedal bearing blocks with A257-1 grease.
2. Install the pedal assemblies into the bearing blocks and torque bearing block attach bolts per § 20-32.

> NOTE
>
> If a force greater than 5 lbs is required to move pedals, check the bearing blocks to ensure they are matched correctly.

67-51 Pedals (continued)

B. Installation (continued)

3. Connect both pedal assemblies to the push-pull tubes and torque the NAS6604-9 bolts to per § 20-32 and install palnuts.
4. Move the pedals through the full range of travel to ensure there is no interference or binding.
5. Secure console. Install the pedal covers and carpeting. Use B270-7 or -8 adhesive to attach carpeting.

67-52 Pitch Control

A. Removal

1. Remove tail rotor assembly per § 64-10. Mark corresponding tail rotor blade grips, tail rotor pitch change to each of the pitch control ears, for later reinstallation so re-rigging is not required.
2. Disconnect and remove A120-5 aft bellcrank per § 67-65.
3. Remove C031-1 pitch control from tail rotor output shaft. Clean output shaft.

B. Installation

1. Verify inner bore of C031-1 pitch control is clean. Scrub interior of pitch control bore with clean, dry toothbrush followed by lint-free wipe; do NOT use, or immerse in, solvent due to potential compromise of oil-impregnated bushings. Slide pitch control assembly onto clean output shaft.
2. With pitch control's input stud thru short arm of A120-5 bellcrank assembly, position bellcrank on tail rotor gearbox and install NAS6604-25 bolt, one AN960-416L washer under bolt head, two MS20002-4 washers, one on each side of bearing and MS21042-L4 nut. Tighten but don't torque at this time.
3. Measure vertical gap between A120-5 bellcrank arm and flange on pitch control stud. Install sufficient C117-34, - 35 and -36 washers between bellcrank and stud to fill gap within ± 0.003 inch. Install one NAS1149F0432P washer and MS21042-L5 nut on protruding end of stud. Torque nut to 200 in.-lb plus nut drag while holding stud from rotating. Install palnut and special torque per § 20-33.
4. Standard torque bolt thru A120-5 bellcrank pivot per § 20-32 and install palnut and special torque per § 20-33.
5. Attach aft end of C121-17 push-pull tube to A120-5 bellcrank and standard torque bolt per § 20-32.
6. Install hardware securing pitch links. Note that an optional A215-012 o-ring may be installed between A214-3 washer and A115-1 spacer at pitch control ears (refer to IPC). Standard torque bolts and palnuts per § 20-32, and torque stripe per Figure 5-1.
7. Install tail rotor assembly per § 64-10.

67-60 Bellcranks

Refer to R66 Illustrated Parts Catalog (IPC) Figure 67-37.

67-61 C317-5 or C317-9 Bellcrank

A. Removal

1. Remove screws securing upper console to side panels; pivot console up and aft.
2. Remove installed avionics located in center console per Chapter 97. Remove hardware securing face plate and avionics trays to side panels and remove plate and trays.

CAUTION

Do not change the length of or remove rod ends from C343-11 and -13 push-pull tube assemblies.

3. Remove hardware securing C343-11 and C343-13 push-pull tube assemblies and F121-9 push-pull tube assembly to C317-5 or C317-9 bellcrank assembly.
4. Remove hardware securing F349-1 support assembly to side panels and remove support with attached bellcrank.
5. Remove hardware securing bellcrank to support and remove bellcrank (carefully remove journals from bellcrank bearing).

B. Installation

1. Insert journals inside C317-5 or C317-9 bellcrank assembly's bearing. Align washers and bellcrank with F349-1 support assembly flange holes and install hardware. Standard torque nut and palnut per § 20-32 and torque stripe per Figure 5-1.
2. Position support with attached bellcrank in helicopter and install hardware securing support to side panels. Verify security.
3. Verify C343-11 push-pull tube's rod end center-to-center dimension is 5.82 ± 0.03 inches and C343-13 push-pull tube's rod end center-to-center dimension is 5.30 ± 0.03 inches. Install hardware securing push-pull tubes to bellcrank. Standard torque nuts and palnuts per § 20-32 and torque stripe per Figure 5-1.
4. Install hardware securing F121-9 push-pull tube assembly to bellcrank. Standard torque nut and palnut per § 20-32 and torque stripe per § 20-33.
5. Perform tail rotor flight control rigging per § 18-50.
6. Actuate pedals through full control travel and verify smooth operation without binding.
7. Pivot upper console forward and down. Position avionics tray and face plate in helicopter and install hardware securing trays and plate to side panels. Verify security.
8. Install avionics in center console per Chapter 97. Install screws securing console to side panels and verify console security.

67-62 C317-7 Bellcrank

A. Removal

1. Refer to § 6-70. Remove F794-2 aft belly cover, F932-1 middle seat backrest assembly, and F474-2 middle seat cover.

2. Disconnect F121-9 and F121-11 push-pull tubes from the C317-7 bellcrank.

3. Remove nuts and accompanying washers securing NAS6604-67 bolt in F334-1 support assembly. Withdraw bolt sufficient to remove C317-7 bellcrank and remove bellcrank, two A141-3 washers, and two A105-3 journals.

B. Installation

1. Install two A105-3 journals in C317-7 bellcrank's pivot bearing bore. With 3/16 inch rigging pin hole aft and an A141-3 washer against outboard face of each journal, install bellcrank on F334-1 support assembly and retain with NAS6604-67 bolt.

2. Install two NAS1149F0463P and one NAS1149F0432P washer followed by MS21042L4 nut on NAS6604-67 bolt. Standard torque bolt per § 20-32. Install palnut, special torque per § 20-33, and torque stripe per Figure 5-1.

3. Connect F121-9 push-pull tube assembly to C317-7 bellcrank and standard torque bolt per § 20-32. Install palnut, special torque per § 20-33, and torque stripe per Figure 5-1.

4. Move pedals full travel. Verify smooth movement and no interference.

5. Install F794-2 aft belly cover, F932-1 middle seat backrest assembly, and F474-2 middle seat cover.

67-63 F316-1 Bellcrank

A. Removal

1. Remove main rotor gearbox per § 63-20.
2. Disconnect F121-11 push-pull tube from F316-1 bellcrank assembly.
3. Disconnect F121-13 push-pull tube from F316-1 bellcrank assembly.
4. Remove nuts and spacer from outboard end of C494-2 shaft. Move shaft slightly inboard and remove washer from between frame tab and bellcrank.
5. Remove spring pin, castellated nut, and washers from inboard end of C494-2 shaft. Move shaft slightly outboard and remove washer from between bellcrank and inboard support.
6. Remove bellcrank.

B. Installation

1. Install one A141-3 washer on C494-2 shaft adjacent to both inboard and outboard end of F316-1 bellcrank.
2. Install bellcrank with washers in helicopter with longer arm pointing up.
3. On inboard end of C494-2 shaft, install two NAS1149F0463P washers followed by MS17825-4 castellated nut. Tighten nut until it aligns with hole in shaft and install new MS16562-14 spring pin.
4. On outboard end of shaft install C130-34 spacer and MS21042L4 nut. Special torque nut per § 20-33. Install palnut and standard torque per § 20-32. Torque stripe inboard and outboard nuts per Figure 5-1.
5. Connect F121-13 push-pull tube to bellcrank and standard torque bolt per § 20-32. Install palnut, standard torque per § 20-32, and torque stripe per Figure 5-1.
6. Connect F121-11 push-pull tube to bellcrank and standard torque bolt per § 20-32. Install palnut, standard torque per § 20-32, and torque stripe per Figure 5-1.
7. Move pedal full travel. Verify smooth movement and no interference.
8. Install main rotor gearbox per § 63-20.

67-64 A331-4 Bellcrank

A. Removal

1. Disconnect F121-13 and C121-17 push-pull tubes from A331-4 bellcrank.
2. Disconnect NAS6604-35 attach bolt and remove bellcrank and two A105-3 journals.

B. Installation

1. Install two A105-3 journals in C331-4 bellcrank's pivot bearings. Install an NAS1149F0432P washer under head of an NAS6604-35 bolt followed by an A141-3 washer and insert bolt thru journals. Install an A141-3 washer on bolt against journal face, followed by an NAS1149F0432P washer.
2. Install bellcrank, with straight side aft, on F020-1 frame's boss, and secure to frame with an NAS1149F0432P washer and MS21042L4 nut. Standard torque bolt per § 20-32. Install palnut, standard torque per § 20-32, and torque stripe per Figure 5-1.

67-65 A120-5 Bellcrank

A. Removal

1. Remove hardware securing C121-17 push-pull tube assembly to A120-5 bellcrank assembly.
2. Disconnect bellcrank pivot from C021-1 tail rotor gearbox.
3. Remove nut holding bellcrank to the pitch control. Remove bellcrank and reinstall nut, and shims found between bellcrank and pitch control.

B. Installation

1. Install pitch control per § 67-52.

CHAPTER 71

POWERPLANT

Section	Title	Page
71-00	Description	71.1
71-10	Engine	71.3
71-11	Preparing Engine for Rolls-Royce Maintenance Facility	71.7
71-12	Preparing Engine for Helicopter Installation	71.7B
71-20	Induction	71.11
71-21	Air Filter Assembly	71.11
71-22	Cage Assembly	71.17
71-23	Engine Inlet Bellmouth	71.17
71-30	Exhaust Weldment	71.19
71-40	Accessories	71.20
71-41	Starter-Generator	71.20
71-42	Generator Control Unit (GCU)	71.20
71-43	Engine Monitoring Unit (EMU)	71.21

Intentionally Blank

CHAPTER 71

POWERPLANT

71-00 Description

One Rolls-Royce model 250-C300/A1 (commercial designation RR300) free-turbine turboshaft engine powers the helicopter. The engine is equipped with an ignition exciter, igniter, starter-generator, two tachometer senders, and additional powerplant instrument senders.

A direct drive, squirrel-cage style cooling fan is mounted to the intermediate shaft and supplies cooling air to the engine and gearbox oil coolers.

Induction air enters through multiple openings in the upper fuselage cowlings and flows into a plenum forward of the firewall. The plenum contains a radial-flow air filter at the engine compressor inlet. The standard filter element is foam. A high-efficiency filter element with pleated media is optional. The high-efficiency filter includes a sight gage inside the upper left cowl door with provides an indication of filter dirt load.

NOTE

The high-efficiency filter is recommended for operating in dusty conditions. The filter may not filter fine sand or dust, resulting in reduced engine life.

If the air filter becomes blocked, spring-loaded doors at the front of the filter housing open allowing unfiltered air to the engine. The AIR FILTER annunciator illuminates when filter bypass is occurring.

Periodically performing power assurance checks may provide indication of engine deterioration or air filter blockage. Maintenance actions such as air filter cleaning and compressor wash should be performed if aircraft fails power assurance check.

A temperature switch is mounted to the firewall above the engine to detect a fire in the engine compartment. Abnormally high temperature causes the ENGINE FIRE annunciator to illuminate.

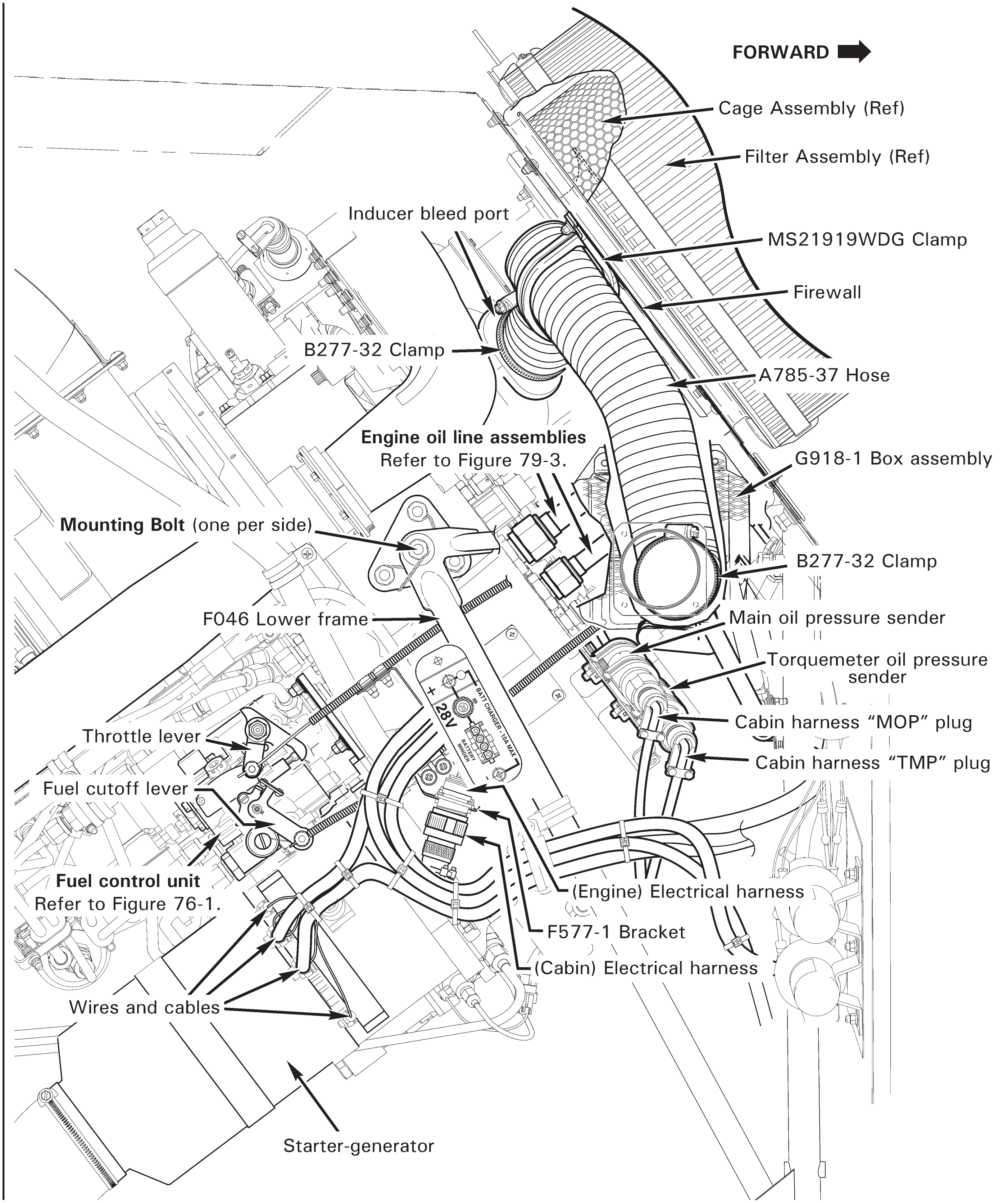

FIGURE 71-1 ENGINE - RIGHT SIDE

71-10 Engine

> NOTE
>
> The electronic monitoring unit (EMU) is a serialized component assigned to the engine. When removing the engine, remove the engine's EMU per § 71-43, as required.

A. Removal

1. Remove engine cowling assembly per § 53-21.
2. Refer to Figures 71-1 and 71-2. Verify heat shrink stamping is legible (or mark wires and cables) and remove hardware securing wires and cables to starter-generator studs. Disconnect (cabin) electrical harness from (engine) electrical harness at F577-1 bracket assembly. Disconnect cabin harness "TMP" (torquemeter oil pressure) and "MOP" (main oil pressure) plugs from engine senders; disconnect cabin harness plug from N2 speed sensor.
3. Pull fuel shut off valve OFF. Disconnect B283-12 (fuel) hose assembly B-nut from engine fuel inlet fitting. Cap fitting and plug line.
4. Remove hardware securing MS21919WDG clamp to firewall, and loosen B277-32 clamps securing A785-37 hose to inducer bleed port and G918-1 box assembly. Remove hose and clamps. Install cover on inducer bleed port and tape box assembly to protect openings from contaminants.
5. Remove hardware securing G391-1 (customer air) line assembly clamps. Loosen line assembly B-nut from G391-5 line assembly union and disconnect B-nut from engine compressor union. Cap fitting and plug line.
6. Drain engine oil per § 12-60; drain engine oil per RR300 Operation and Maintenance Manual (OMM). Refer to Figure 79-3. Remove hardware securing F723 oil line assembly clamps. Loosen F723-1, F723-2, and F723-3 line assembly B-nuts from F649-1 oil cooler and G689-1 oil tank assembly unions; disconnect B-nuts from engine fittings. Cap fittings and plug lines.
7. Refer to Figure 63-1. Remove hardware securing F018-1 clutch assembly yoke to (aft) A947-2 plate assembly, noting hardware removed.
8. Refer to Figure 76-1. Remove fasteners securing C522-10 (throttle) and A522-10 (fuel cutoff) control inner wires to FCU throttle and fuel cutoff levers. Remove fasteners securing control housings and AN742-4 clamps to F577 bracket assemblies. Refer to Figure 76-2. Remove cotter pin and washer securing C522-11 (power turbine governor) control inner sleeve and D333-13 fitting to PTG input lever; disconnect control from lever.
9. Remove exhaust per § 71-30.

71-10 Engine (continued)

A. Removal (continued)

10. Connect engine hoist to G200-1 engine lifting lug. Support engine during mounting hardware removal.

11. Cut and discard safety wire and remove two bolts securing bottom engine mount to F174-1 support weldment. Cut and discard safety wire and remove two bolts (one per side) securing side engine mounts to F046 lower frames.

12. Carefully remove engine; verify F579-1 bellmouth is clear of firewall, and loose wires, cables, fittings and line assemblies are clear of engine during separation. Install bellmouth cover.

13. Prepare engine for Rolls-Royce maintenance facility per § 71-11, as required.

Intentionally Blank

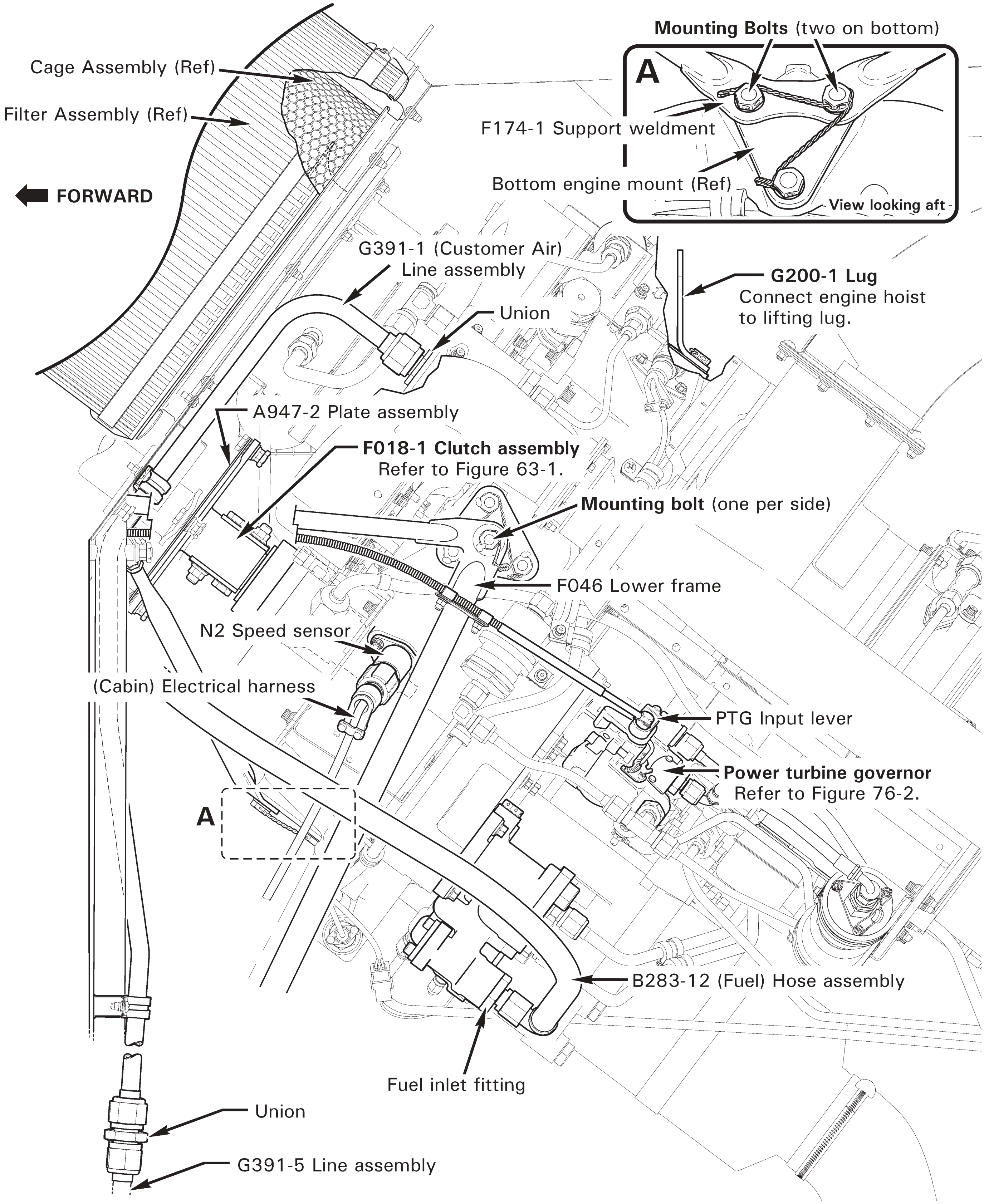

FIGURE 71-2 ENGINE - LEFT SIDE

71-10 Engine (continued)

B. Installation

1. Prepare engine for installation in helicopter per § 71-12, as required.
2. Refer to Figures 71-1 and 71-2. Connect engine hoist to G200-1 engine lifting lug.
3. Remove F579-1 bellmouth cover. Carefully install engine, inserting bellmouth through firewall. Do not pinch loose wires or cables, or damage fittings or line assemblies. Before installing engine mounting hardware, verify the inlet seal is centered when pressed against the firewall, and that the seal is not twisted or pinched.
4. Install hardware securing side engine mounts to F046 frames. Standard torque bolts (one per side) per § 20-32; install 0.032-inch diameter lockwire and safety bolts to frames.
5. Refer to Figure 63-1. Install hardware securing F018-1 clutch assembly yoke to (aft) A947-2 plate assembly, as removed. Perform engine driveline shimming per § 63-11. Standard torque nuts and palnuts per § 20-32, and torque stripe per Figure 5-1.
6. a. Install hardware securing F174-1 support weldment to bottom engine mount; special torque bolts per § 20-33 (safety wire will be installed in step 7).
   b. Verify 0.2 inch minimum clearance between F642 shaft weldment and firewall grommet. To adjust clearance:
      i. Remove two bolts securing support weldment rod ends to engine bottom mount and remove support weldment.
      ii. Adjust rod end extension on both sides as required per § 5-33, and Figures 5-1 & 5-2; ensure rod extension is no more than 1.10 inches.
      iii. Repeat steps a & b until minimum shaft-to-firewall grommet clearance is achieved.
7. Install 0.032-inch diameter lockwire & safety three bolts together per Figure 71-2 Detail A. Verify safety is correct direction.
8. Install hardware securing support weldment rod ends to lower frames, standard torque nuts and palnuts per § 20-32, and torque stripe per Figure 5-1. Standard torque jam nuts and palnuts securing rod ends to support weldment per § 20-32, and torque stripe per Figure 5-1.
9. Remove engine hoist.
10. Install exhaust per § 71-30.
11. Remove cap and torque check engine compressor (customer air) union per RR300 Operation and Maintenance Manual (OMM). Remove plug and connect G391-1 line assembly B-nut to engine. Special torque B-nuts per § 20-33 and torque stripe fittings. Install hardware securing line assembly clamps.

71-10 Engine (continued)

B. Installation (continued)

12. Refer to Figure 79-3. Remove caps and torque check engine (oil line) fittings per RR300 OMM. Remove plugs and connect F723-1, F723-2, and F723-3 line assembly B-nuts to engine. Special torque B-nuts at engine, F649-1 oil cooler, and G689-1 oil tank assembly per § 20-33, and torque stripe fittings. Install hardware securing line assembly clamps. Service engine oil per RR300 OMM; service engine oil per § 12-60.
13. Remove cover and tape and install B277-32 clamps and A785-37 hose onto inducer bleed port and G918-1 box assembly; tighten clamps. Install MS21919WDG clamp around hose, and install hardware securing clamp and hose to firewall. Verify security.
14. Remove cap and torque check engine fuel inlet fitting per RR300 OMM. Remove plug and connect B283-12 (fuel) hose assembly B-nut to inlet fitting. Special torque B-nut per § 20-33 and torque stripe per Figure 5-1. Push fuel shut off valve ON.
15. Connect (cabin) electrical harness plug to N2 speed sensor; connect cabin harness "TMP" (torquemeter oil pressure) and "MOP" (main oil pressure) plugs to engine senders. Connect cabin harness to (engine) electrical harness at F577-1 bracket assembly. Install wires and cables on starter-generator studs according to stamping. Install hardware, special torque nuts, and torque stripe per Figure 5-1.
16. Perform FCU throttle and fuel cutoff control rigging per §§ 76-11 & 76-12. Perform PTG control rigging per § 76-21 (perform PTG rigging check during run-up).
17. Install engine EMU per § 71-43, as required.
18. Perform ground check per § 5-41. Remove the air from the engine fuel system, then perform fuel flow check, per RR300 OMM. Perform run-up per § 5-42, and PTG rigging check per § 76-22.
19. Install engine cowling assembly per § 53-21.

71-11 Preparing Engine for Rolls-Royce Maintenance Facility

NOTE

Cap and plug Rolls-Royce engine model 250-C300/A1 engine fluid ports, electrical connectors, etc., and in removed components, progressively during procedure to prevent foreign object contamination.

1. Refer to Figures 71-1 and 71-2. Remove hardware securing MS21919WCH clamp(s) to engine vertical firewall and F577-5 bracket (earlier R66s). Loosen B277 clamp(s) and remove A729-68 tubes (if installed), breather hose/tube, and F170 fitting. Install plug.
2. Refer to Figure 76-1. Remove D930-2 spring from fuel control unit.
3. Refer to Figure 71-4. Remove hardware securing F169-2 base (and F577-5 bracket, if installed) to exhaust collector. Remove base (and bracket) and install exhaust collector cover.
4. To remove (engine) electrical harness:
   a. Disconnect engine harness's plug from engine magnetic plug on bottom of engine accessory gearbox.
   b. Remove hardware securing harness wire terminal to ignition exciter box stud.
   c. Cut and discard ty-raps as required, and disconnect G426-1 (fuel differential pressure) switch assembly wire from harness at connectors. Cut and discard stand-off ty-raps at switch wire and F741-1 line assembly.
   d. Remove hardware securing (2) MS21919WCH4 clamps to (bottom of) engine gearbox.
   e. Disconnect harness plugs from anti-ice valve assembly solenoid, anti-ice pressure switch assembly, and N_1 speed pick-up assembly.
   f. Remove hardware securing (2) MS21919WCH4 clamps to (2) engine-supplied MS9592-050 brackets.
   g. Remove hardware securing harness wire terminals to measured gas temperature (MGT) thermocouple studs.
   h. Disconnect harness plug from engine magnetic plug near oil line unions.
   i. Cut and discard ty-raps as required, and disconnect D745-3 pressure switch assembly from harness at connectors.
   j. Remove hardware securing F577-1 and F577-3 bracket assemblies to (right side of) engine gearbox. Remove harness.
5. Remove engine inlet bellmouth per § 71-23 Part A steps 2 and 3.

71-11 Preparing Engine for Rolls-Royce Maintenance Facility (continued)

6. Disconnect F741-1 line assembly from G426-1 switch assembly and fuel pump's AN919-0D reducer and remove line.
7. Disconnect F727-1 line assembly from fuel pump's AN919-2D reducer. Disconnect F727-2 line assembly from engine fireshield's drain fitting. Remove hardware securing MS21919WCH4 clamp the combustion section's plug flange and remove lines.
8. Remove AN919-0D and AN919-2D reducers, and G426-1 switch assembly, from fuel pump.
9. Remove hardware securing F593-3 plate to bottom of engine gearbox and remove plate.
10. Remove bolt, spacer (if installed), and G732 cap securing F018-1 clutch assembly in engine gearbox and remove clutch assembly.
11. Remove AN815-8D union from engine gearbox TANK VENT port, AN815-8D union or CV26-77 check valve (early R66s) from OIL OUTLET port, and AN815-10D union from OIL INLET port. Remove D745-3 pressure switch assembly from engine gearbox.
12. Cut and discard safety wire (if present) and remove hardware securing G200-1 engine lifting lug and G200-2 cover to engine gearbox, if installed. Remove lug, cover, and any residual B270-1 sealant.

NOTE
Removal of RHC-installed fuel-flow transducer (optional equipment) is not required, but may be desired for use in spare engine. Refer to § 28-23.

71-12 Preparing Engine for Helicopter Installation

> NOTE
>
> Remove protective caps and plugs progressively during procedure to prevent foreign object contamination.

1. Refer to Figures 71-1 and 71-2. Position G200-1 engine lifting lug on top of engine gearbox, as desired (optional). Install (2) NAS6605-3 bolts and (2) NAS1149F0532P washers, special torque bolts per § 20-33, and torque stripe per Figure 5-1.
2. Install D745-3 pressure switch assembly on front of engine gearbox, special torque switch per § 20-33, and torque stripe per Figure 5-1.
3. Install NAS617-10 packing on union and install union in engine gearbox OIL INLET port. Special torque union per § 20-33 and torque stripe per Figure 5-1.
4. Install NAS617-8 packing on engine-side of either union or CV26-77 check valve (early R66s) and install union or check valve (flow arrow to point away from engine) in engine gearbox OIL OUTLET port. Special torque union or check valve per § 20-33 and torque stripe per Figure 5-1.

> **CAUTION**
>
> Installing CV26-77 check valve incorrectly can damage oil tank.

5. Install NAS617-8 packing on union and install union in engine gearbox TANK VENT port. Special torque union per § 20-33 and torque stripe per Figure 5-1.
6. Install F018-1 clutch per § 63-12.
7. Position F593-3 plate on bottom of engine gearbox and install aft bolt, finger tight.
8. Install G426-1 switch assembly in fuel pump BF (before filter) port. Special torque switch per § 20-33 and torque stripe per Figure 5-1.
9. Install MS29512-3 packing on AN919-0D reducer and install reducer in fuel pump AF (after filter) port. Special torque reducer per § 20-33 and torque stripe per Figure 5-1.
10. Install MS29512-3 packing on AN919-2D reducer and install reducer in fuel pump DRAIN port. Special torque reducer per § 20-33 and torque stripe per Figure 5-1.
11. Connect F727-1 line assembly to fuel pump's AN919-2D reducer. Connect F727-2 line assembly to engine fireshield's drain fitting. Install one MS21919WCH4 clamp around each line, install hardware securing lines to combustion section's plug flange, and tighten screw. Special torque F727-1 line assembly nut at reducer per § 20-33 and torque stripe per Figure 5-1; special torque F727-2 line assembly at fireshield's drain fitting and torque stripe per Figure 5-1. Verify security.

71-12 Preparing Engine for Helicopter Installation (continued)

12. Connect F741-1 line assembly to G426-1 switch assembly and fuel pump's AN919-0D reducer. Special torque nuts per § 20-33 and torque stripe per Figure 5-1.

13. Install engine inlet bellmouth per § 71-23 Part B steps 1 & 2. Install bellmouth cover.

14. To install (engine) electrical harness:

    a. Position F577-1 bracket assembly on engine harness's D38999-20FC connector so connector's main keyway will face outboard. Install and tighten hardware; verify security. Install bracket on (right side of) engine gearbox, special torque nuts per § 20-33, and torque stripe per Figure 5-1.

    b. Install MS21919WCH8 clamp around harness assembly and install clamp on F577-3 bracket assembly. Install and tighten hardware. Install bracket on (right side of) engine gearbox, special torque nuts per § 20-33, and torque stripe per Figure 5-1.

    c. Connect harness to D745-3 pressure switch assembly at connectors. Verify security. Install (2) MS3367-7-9 ty-raps to secure plug. Cinch ty-raps until snug without overtightening and trim tips flush with heads.

    d. Connect harness plug to engine magnetic plug near oil line unions. Verify plug security.

    e. Install harness wire terminals (white-to-white, green-to-green) on measured gas temperature (MGT) thermocouple studs. Install hardware, special torque nuts per § 20-33, and torque stripe per Figure 5-1.

    f. Verify (2) engine-supplied MS9592-050 brackets are installed on engine lube oil filter assembly per Rolls-Royce SB RR300-72-014. Install (2) MS21919WCH4 clamps around harness assembly and install clamps on brackets. Install and tighten hardware; verify security.

    g. Remove engine supplied O-ring installed in N_1 speed sensor connector and replace with new 1182N111 O-ring. Connect harness plugs to anti-ice valve assembly solenoid, anti-ice pressure switch assembly, and N_1 speed sensor assembly. Special torque D38999/26FB98SA plug at N_1 per § 20-33 (Amphenol® plug only).

NOTE

Amphenol® D38999/26FB98SA plug is standard for F049-012 harness assembly Rev Q thru S but may have been used on prior revisions. MT640-2 open-end crow foot is available for use with Amphenol® plugs.

71-12 Preparing Engine for Helicopter Installation (continued)

15. h. Install (2) MS21919WCH4 clamps around harness assembly and install clamps on (bottom of) engine gearbox. Install hardware, special torque nuts per § 20-33, and torque stripe per Figure 5-1.

i. Stand-off ty-rap G426-1 (fuel differential pressure) switch assembly's wire from F741-1 line assembly using MS3367-4-9 ty-raps. Connect switch wire to harness at connectors. Install (2) MS3367-5-9 ty-raps to secure connectors to harness. Cinch ty-raps until snug without overtightening and trim tips flush with heads.

j. Install harness wire terminal on ignition exiter box stud. Install hardware, special torque nut per § 20-33, and torque stripe per Figure 5-1.

k. Connect harness plug to engine magnetic plug on bottom of engine gearbox. Verify plug security.

16. Refer to Figure 71-5. Verify F169-2 (exhaust) base and engine exhaust collector mating surfaces are clean and dry, and lay 0.25 inch bead 7020-3 ceramic putty on top of exhaust collector flange. Position F169-2 base, F577-5 bracket (earlier R66s), and F173-2 shield (if installed) on exhaust collector and install hardware. Verify security. Remove excess putty. Install exhaust protective cover.

17. Refer to Figure 76-1. Install D930-2 spring.

18. Install packing (and o-rings, earlier R66s) on F170 fitting and install fitting in engine gearbox OB VENT port. Special torque fitting per § 20-33 and torque stripe per Figure 5-1. Position engine gearbox vent tubes/hose with clamps over fitting and exhaust weldment tube. Orient clamp screw(s) (and any slight bunching of hose, early R66s) on top within 30°, and tighten clamps. Verify security. Position MS21919WCH clamp(s) over tube/hose and install hardware (and spacer) securing clamps to engine vertical fireshield (and F577-5 bracket, earlier R66s). Verify security.

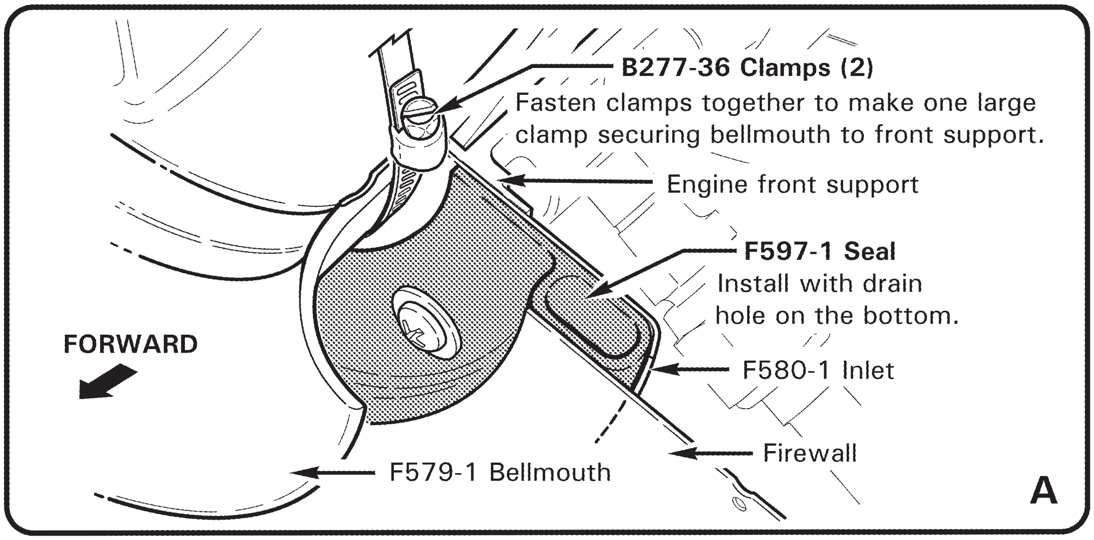

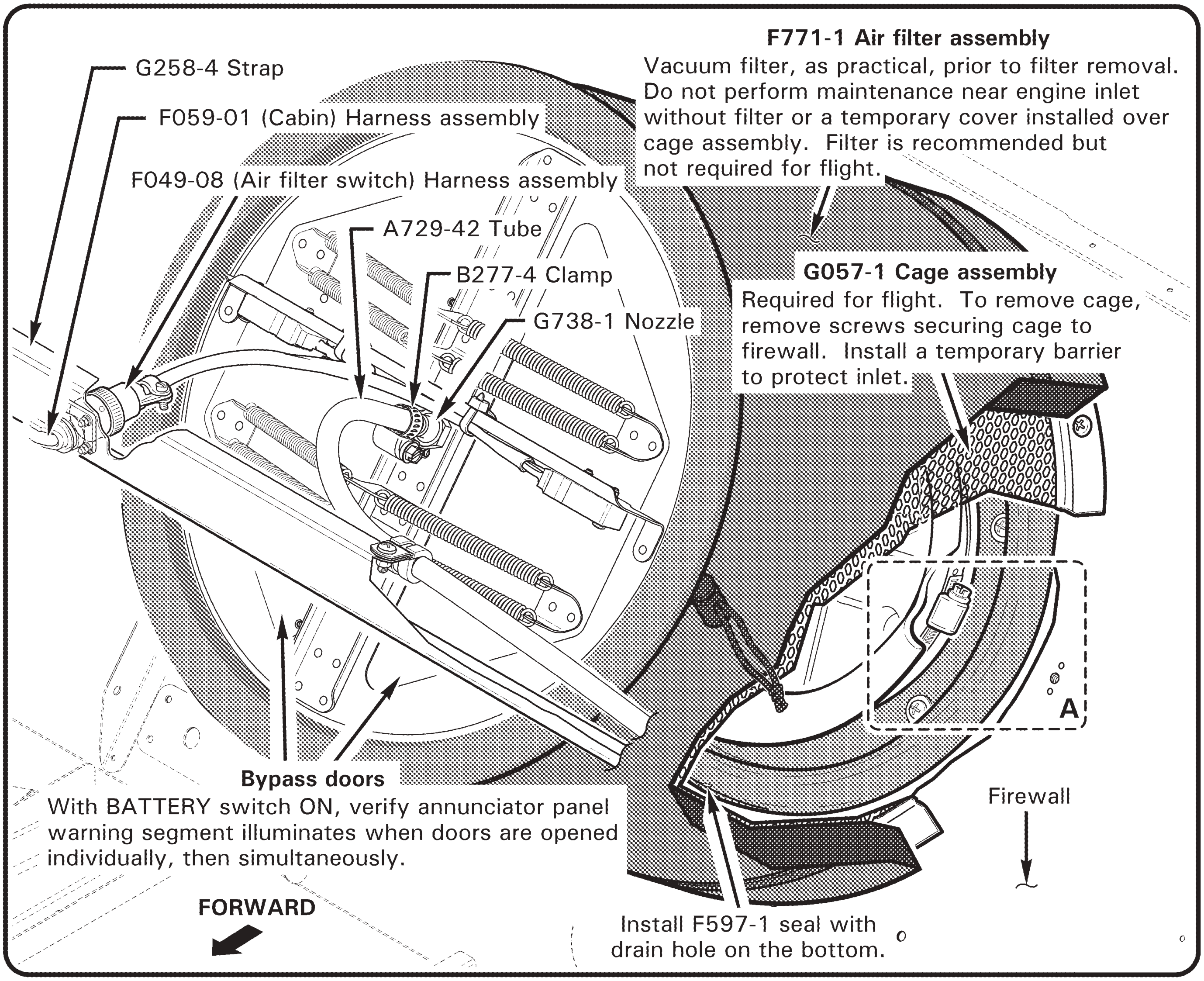

FIGURE 71-3 INDUCTION (STANDARD FILTER SHOWN)

71-20 Induction

NOTE

Refer to § 12-70 for (Engine) Compressor Rinse and Wash procedures.

CAUTION

Never operate engine without G057-1 cage assembly installed. F771-1 (foam) filter assembly not required for flight; 146150-101 (inlet barrier filter) filter assemblies not required for flight.

CAUTION

Do not perform maintenance near engine inlet without cage and filter(s) or a temporary cover installed. Contact Rolls-Royce Customer Support if foreign objects enter inlet.

71-21 Air Filter Assembly

A. Description

The standard reticulated polyurethane foam filter is installed over the G057-1 cage assembly (refer to § 71-22) and secured with locking cords. Filter should be removed & cleaned with water when visibly dirty; replace filter if foam is visibly damaged or deteriorated.

The optional G058-1 inlet barrier filter cage assembly is a separate installation with additional parts that secure the filters to the G057-1 cage assembly and that secure the assembly to the upper frame and firewall. A filter maintenance aid helps to determine if cleaning is required earlier than scheduled (refer to Figure 71-4 and Parts E and F); certain operating environments require more frequent cleaning. The inlet barrier filter may be cleaned 15 times before replacement.

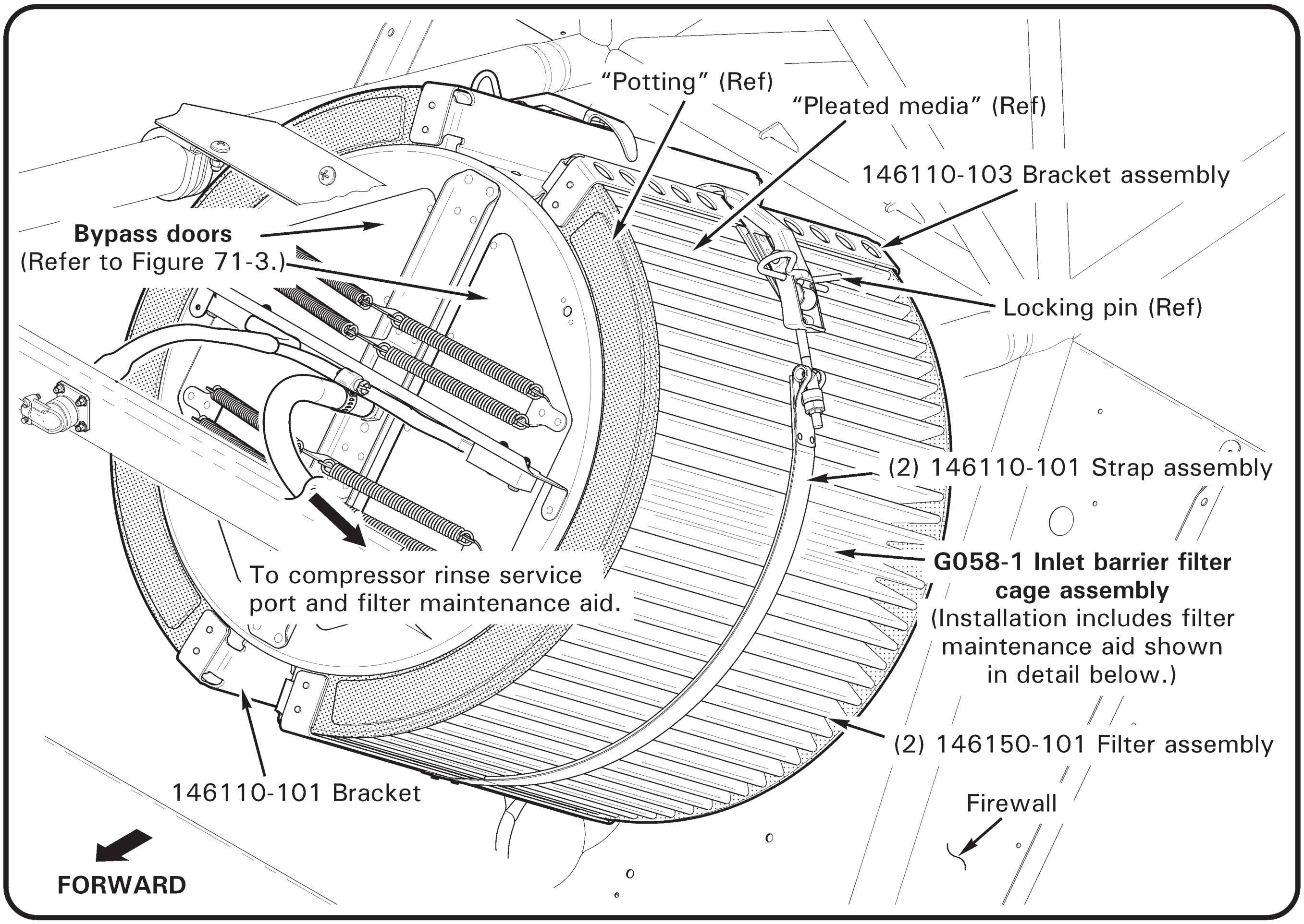

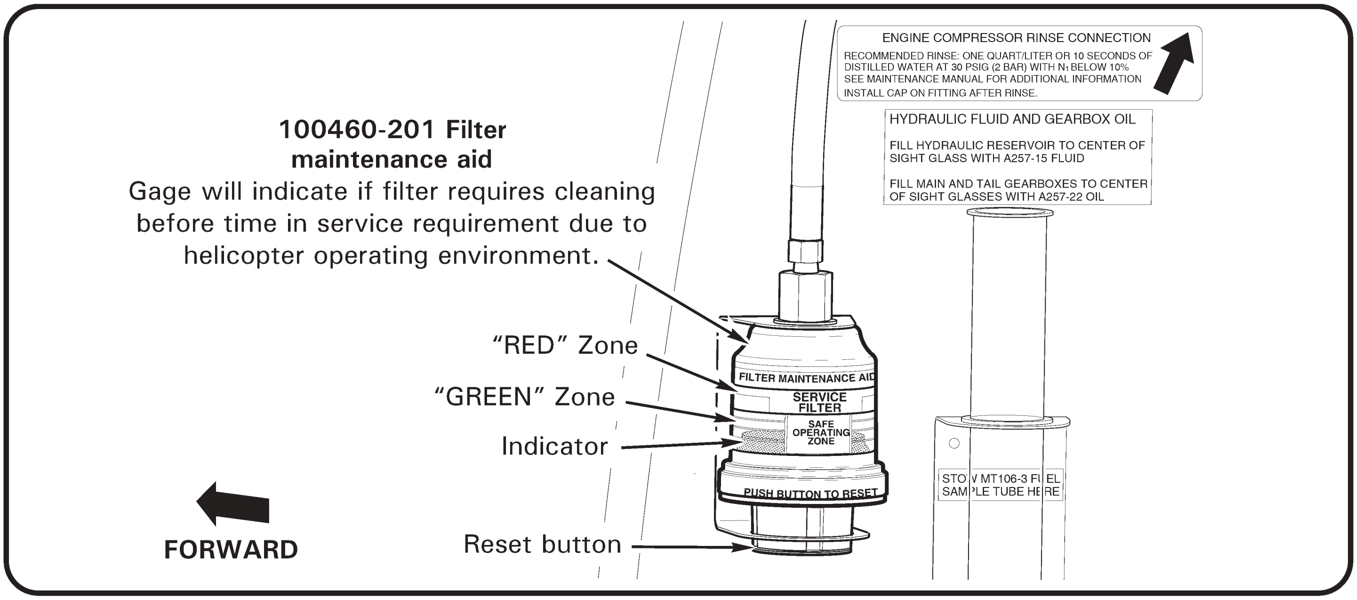

FIGURE 71-4 INDUCTION (INLET BARRIER FILTER SHOWN)

71-21 Air Filter Assembly (continued)

B. Removal

Standard Filter:

1. Remove tailcone cowling assembly per § 53-23.
2. Refer to Figure 71-3. Vacuum exterior of F771-1 filter assembly.
3. Disconnect F049-08 (bypass) switch assembly harness from airframe harness at connectors.
4. Loosen clamp securing tube to compresssor rinse nozzle and pull tube off of nozzle.
5. Release cord locks, loosen cords as required, and pull filter forward off of G057-1 cage assembly.
6. Install temporary cover over cage assembly.

Inlet Barrier Filter:

1. Remove tailcone cowling assembly per § 53-23.
2. Refer to Figure 71-4. Remove locking pin from strap assembly, release latch, and move strap assembly aside.
3. Remove 146150-101 filter from G058-1 cage assembly brackets; handle filter by the potting to avoid damaging pleated media.
4. Repeat steps 2 and 3 for other filter.

C. Installation

Standard Filter:

1. Refer to Figure 71-3. Remove temporary cover. Pull F771-1 filter assembly aft over G057-1 cage assembly and tighten cords as required. Verify security.
2. Install clamp and tube on compressor rinse nozzle and tighten clamp. Verify security.
3. Connect F049-08 (bypass) switch assembly harness to airframe harness at connectors.
4. Turn battery switch on. Verify annunciator panel warning segment illuminates when bypass doors are opened individually, then simultaneously. Turn battery switch off.
5. Install tailcone cowling assembly per § 53-23.

71-21 Air Filter Assembly (continued)

C. Installation (continued)

Inlet Barrier Filter:

1. Service inlet barrier filter per Part D.
2. Refer to Figure 71-4. Remove temporary cover. Insert 146150-101 filter in G058-1 cage assembly brackets; handle filter by the potting to avoid damaging pleated media. Verify filter is properly seated.
3. Latch strap assembly. Adjust strap tension as required to ensure filter security, but without overtightening. Install locking pin.
4. Repeat steps 1 thru 3 for other filter.
5. Install tailcone cowling assembly per § 53-23.

D. Servicing

Standard Filter:

Filter should be removed & cleaned with water when visibly dirty. Replace filter if foam is visibly damaged or deteriorated.

Inlet Barrier Filter:

1. Visually inspect each filter assembly for obvious damage; replace filter(s) as required per Parts B and C.
2. To clean and dry each filter assembly:
   a. Remove debris as practical from dirty side of filter assembly using a soft bristle brush.

CAUTION

Use only ZOK 27 cleaner to clean filter media.

CAUTION

Do not use steam, a high-pressure washer, or compressed air to clean filter assemblies.

   b. Using a spray bottle, apply ZOK 27 cleaner to both sides of filter media until saturated. Allow to soak for minimum 10 minutes (30 minutes or more may be necessary for high-contaminant environments).
   c. Rinse filter with clean water in opposite direction of airflow (from clean side) using low-pressure stream. Orient filter so pleats are vertical; rinse side-to-side starting at the top and working downward. Proceed downward only when water runoff is clear.

71-21 Air Filter Assembly (continued)

D. Servicing (continued)

Inlet Barrier Filter (continued):

2. d. Rinse filter in direction of airflow per step 2c.

   e. Rotate filter top to bottom and perform steps 2c and 2d.

CAUTION

Do not use compressed air, or heat from any source, to dry filter assemblies.

   f. Shake off excess water. Allow filter assembly to dry at ambient temperature (above freezing), protected from contaminants.

3. Using a permanent marker, mark cleaned filter(s) with "X" through last unmarked indented potting number (1–15). Replace 146150-101 filter at the next service interval after 15 cleanings.

4. For each filter: Visually inspect filter pleats for straightness. Visually inspect filter media for small ruptures, tears, or holes. Visually inspect potting compound for cracks, gouges, or gaps between filter and compound. Replace filter(s) as required per Parts B and C.

CAUTION

Verify filter media is completely dry before applying oil. Use only approved oil; never put an un-oiled filter in service.

5. Apply 4.5 oz total 100100-045 filter oil to each filter. Using squeeze bottle with tip, apply a small stream of oil (sparingly) along entire peak of each pleat on both sides of filter (save some for final application). Let filter sit for 30 minutes minimum as oil "wicks" into surrounding filter media. Apply remaining oil not to exceed quantity above to any areas that are still white or not yet uniform in color.

6. Push yellow button to reset filter maintenance aid.

71-21 Air Filter Assembly (continued)

E. Scheduled Inspections

Standard Filter:

Refer to § 5-45 100-Hour/Annual Inspection.

Inlet Barrier Filter:

Refer to § 5-45 100-Hour/Annual Inspection.

Service 146150-101 filters per Part D every 300 hours or 1 year, whichever occurs first. Replace 146150-101 filters at the next service interval after 15 cleanings.

F. Special Inspections

Standard Filter:

If pilot reports **AIR FILTER caution segment illuminates** during engine operation, when engine is shut down, verify proper function of bypass switch. Turn battery switch on. Verify caution segment illuminates when bypass doors are opened individually, then simultaneously. Turn battery switch off. If bypass switch functions properly, replace F771-1 filter assembly per Parts B and C.

If pilot reports a **failed power assurance check** (refer to § 5-43), replace F771-1 filter assembly per Parts B and C.

Inlet Barrier Filter:

If pilot reports **AIR FILTER caution segment illuminates** during engine operation, when engine is shut down, verify proper function of bypass switch. Turn battery switch on. Verify caution segment illuminates when bypass doors are opened individually, then simultaneously. Turn battery switch off. If bypass switch functions properly, service 146150-101 filters per Part D.

If pilot reports a **failed power assurance check** (refer to § 5-43), service 146150-101 filters per Part D.

If **filter maintenance aid indicates in red zone**, service 146150-101 filters per Part D.

71-22 Cage Assembly

A. Removal

1. Remove tail rotor drive fan shaft per § 65-10.
2. Remove air filter assembly per § 71-21.
3. Remove hardware securing G057-1 or G058-1 cage assembly to firewall and remove cage. Install suitable barrier to prevent foreign objects from entering engine inlet.

B. Installation

1. Remove barrier, position G057-1 or G058-1 cage assembly against firewall, and install hardware securing cage to firewall. Verify security.
2. Install air filter assembly per § 71-21.
3. Install tail rotor drive fan shaft per § 65-10.

71-23 Engine Inlet Bellmouth

A. Removal

1. Remove engine per § 71-10.
2. Refer to Figure 71-3. Remove F579-1 bellmouth cover and loosen B277-36 clamps securing bellmouth to engine front support. Remove bellmouth and clamps.
3. Remove hardware securing F597-1 seal and F580-1 inlet to engine front support. Remove seal and inlet. Install cover over front support.

B. Installation

1. Refer to Figure 71-3. Remove engine front support cover, install F580-1 inlet and F597-1 seal (drain hole on bottom) on front support, and install hardware. Verify security.
2. Install B277-36 clamps and F579-1 bellmouth over front support flange, and tighten clamps. Verify security.
3. Install engine per § 71-10.

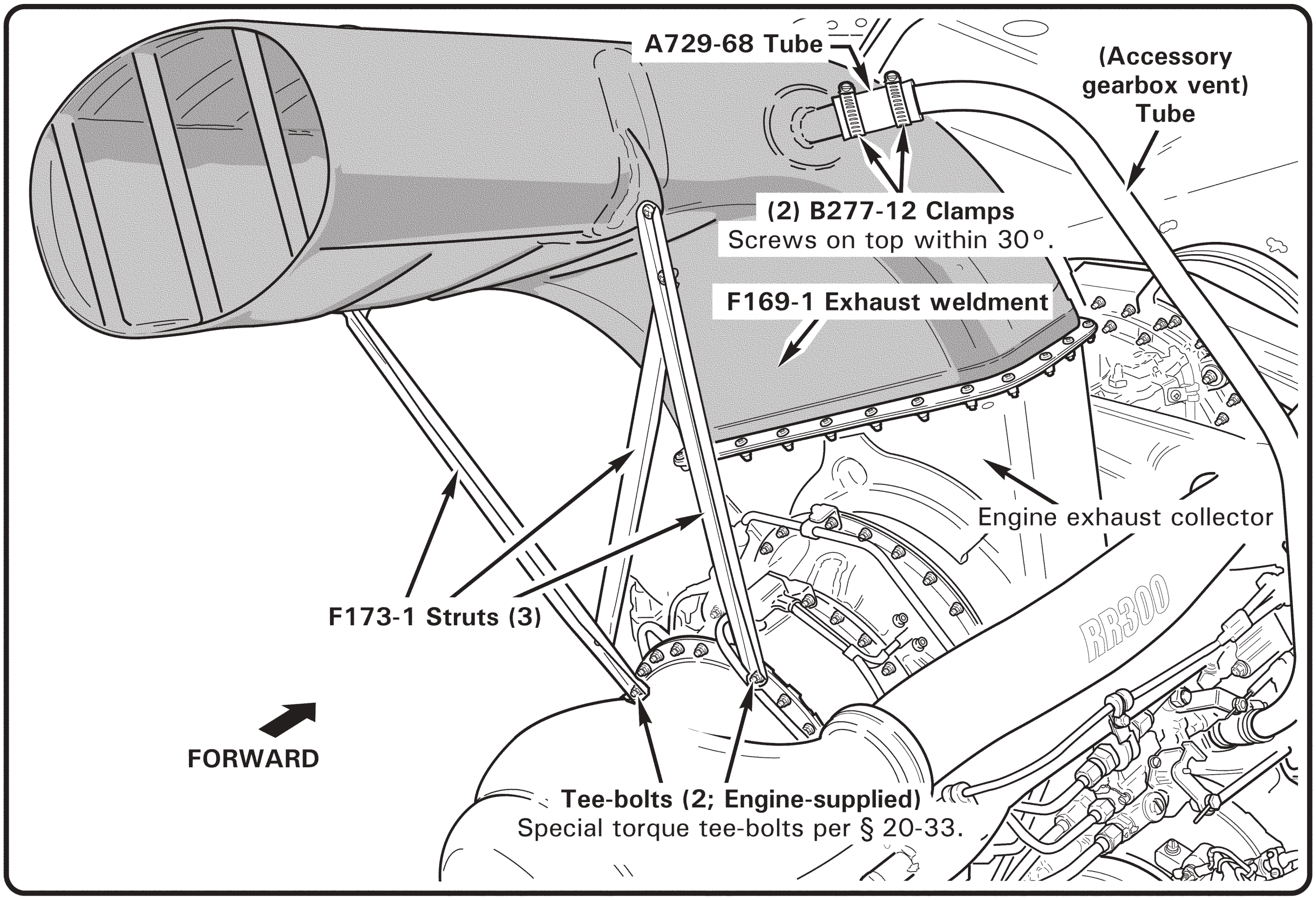

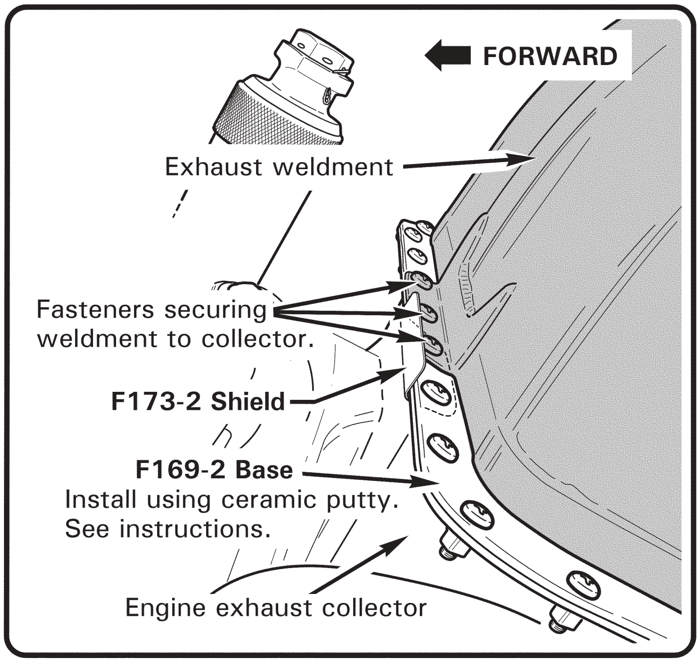

FIGURE 71-5 EXHAUST

71-30 Exhaust Weldment

A. Removal

1. Remove engine cowling assembly per § 53-21.
2. Refer to Figure 71-5. Remove hardware securing F173-1 struts to F169-1 exhaust weldment and engine, and remove struts.
3. Loosen clamp(s) securing (accessory gearbox vent) tubes/hose to exhaust; pull tubes/hose off of exhaust weldment.
4. Remove fasteners securing exhaust weldment and F173-2 shield (if installed) to engine exhaust collector and remove shield. Carefully lift exhaust weldment up and off of F169-2 base flange, and remove exhaust weldment.
5. As required, remove hardware securing base and F577-5 bracket (early R66s) to exhaust collector and remove base. Install exhaust collector cover.

> NOTE
>
> F169-1 exhaust weldment material is Type 321 CRES sheet.

B. Installation

1. Refer to Figure 71-5. If F169-2 base is installed, proceed to step 3. Verify base and engine exhaust collector mating surfaces are clean and dry, and lay 0.25 inch bead 7020-3 ceramic putty on top of exhaust collector flange.
2. Position F169-2 base, F577-5 bracket (earlier R66s), and F173-2 shield (if installed) on exhaust collector and install hardware Verify security. Remove excess putty.
3. Position F169-1 exhaust weldment on base and install fasteners securing exhaust weldment to exhaust collector.
4. Install hardware securing F173-1 struts to exhaust weldment and engine. Special torque engine tee-bolts per § 20-33.
5. Position engine gearbox vent tubes/hose with clamps over exhaust weldment tube. Orient clamp screw(s) (and any slight bunching of hose, early R66s) on top within 30°, and tighten clamps. Verify security. As required, position MS21919WCH clamp(s) over tube/hose and install hardware (and spacer) securing clamps to engine vertical fireshield (and F577-5 bracket, earlier R66s). Verify security.
6. Install engine cowling assembly per § 53-21.

71-40 Accessories

71-41 Starter-Generator

A. Removal

1. Remove engine cowling assembly per § 53-21.
2. Refer to Figure 71-1. Verify heat shrink stamping is legible (or mark wires and cables) and remove hardware securing wires and cables to starter-generator studs.
3. Remove starter-generator per RR300 Series Operation and Maintenance Manual (OMM).

B. Installation

1. Install starter-generator per RR300 Series Operation and Maintenance Manual (OMM).
2. Refer to Figure 71-1. Install wires and cables on starter-generator studs according to stamping. Install hardware, special torque nuts per § 20-33, and torque stripe per Figure 5-1.
3. Install engine cowling assembly per § 53-21.

71-42 Generator Control Unit (GCU)

A. Removal

1. Open baggage compartment door. Remove hardware securing G248-1 cover (battery compartment) to inner compartment and remove cover.
2. Disconnect F049 (GCU) electrical harness plug from GCU. Remove mounting hardware, and remove GCU. Cap receptacles.

B. Installation

1. Open baggage compartment door. Position GCU on inner compartment shelf and install mounting hardware. Verify security.
2. Remove caps and connect F049 (GCU) electrical harness plug to GCU.

> NOTE
>
> Verify MS3106R24-28S plug is fully-engaged in GCU receptacle. Rotate plug collar until tight.

3. Install hardware securing G248-1 cover to inner compartment. Close and secure baggage door.

71-43 Engine Monitoring Unit (EMU)

> NOTE
>
> The electronic monitoring unit (EMU) is a serialized component assigned to the engine. When removing the engine, remove the engine's EMU per § 71-43, as required.

A. Removal

1. Remove hardware securing F003-4 (RH) seat back assembly to cabin.
2. Disconnect F059-01 (cabin) electrical harness "EMU" plug and F049-07 (USB) harness plug from EMU.
3. Remove hardware securing EMU to bulkhead and remove EMU. Cap receptacles.

B. Installation

1. Remove caps, position EMU on bulkhead, and install hardware. Verify security.
2. Connect F059-01 (cabin) electrical harness "EMU" plug and F049-07 (USB) harness plug to EMU.
3. Turn battery switch on. After 10 seconds press annunciator panel test button; verify EMU amber warning segment illuminates, and is solid, indicating normal EMU operation. (See R66 Pilot's Operating Handbook Section 7 for complete description.) Turn battery switch off.
4. Install hardware securing F003-4 (RH) seat back assembly to cabin.

C. Downloading EMU Data

> NOTE
>
> An EMU USB receptacle is located inside the aft right seat baggage compartment, on the underside of the aft ledge. Use a flashlight and mirror when inserting USB cable into receptacle.

Download summary or diagnostic data per RR300 Series Operation and Maintenance Manual (OMM).

D. Troubleshooting

1. Turn battery switch off and disconnect battery ground cable from battery negative terminal.
2. Open circuit breaker panel and verify integrity of fuse for EMU; replace fuse as required. Close circuit breaker panel.
3. Access annunciator panel plug and verify connector is fully seated on G198 annunciator panel receptacle.

71-43 Engine Monitoring Unit (EMU; continued)

D. Troubleshooting (continued)

4. Access EMU behind right, aft seatback assembly, then disconnect and reconnect EMU electrical connector.

5. Turn battery switch off and connect battery ground cable to battery negative terminal.

6. While observing the built-in indicator light on the EMU, turn battery switch on and verify light illuminates but does not flash. Steady illumination of built-in indicator light means normal EMU operation. A slow-flashing (0.5 hz) flashing light, or no illumination, indicates EMU or monitored sensor failure; perform RR300 OMM Task 77-51-00-200-801.

CHAPTER 75

ENGINE AIR SYSTEMS

Section	Title	Page
75-00	Description	75.1
75-10	Engine Anti-Ice	75.1

Intentionally Blank

CHAPTER 75

ENGINE AIR SYSTEMS

75-00 Description

This chapter includes a description of the engine anti-ice system. Refer to RR300 Series Operation and Maintenance Manual (OMM) and manufacturer's maintenance publications for system-specific inspection, repair, and maintenance procedures.

The Rolls-Royce engine model 250-C300/A1 anti-ice system provides hot compressor discharge air to the compressor front support. Areas of the front support are subject to ice formation when the engine is operated near or below freezing temperatures and visible moisture is present. An anti-ice switch located on the cyclic box cover is selected by the pilot in certain conditions (see R66 Pilot's Operating Handbook).

The engine anti-ice system includes an air valve, a solenoid valve, and a pressure switch. The air valve is mounted on top of the compressor scroll; the solenoid valve and pressure switch are mounted on top of the compressor. When anti-ice is switched "ON", the solenoid valve de-energizes, the pressure-activated air valve opens, the pressure switch closes which illuminates the green anti-ice segment on the annunciator panel, and hot, compressed-air is routed to hollow passages in the front support vanes and center hub.

Anti-ice system operation will result in some performance degradation due to hot induction air and reduced air-volume reaching the power and gas producing turbine stages.

The anti-ice solenoid valve is electrically-closed, or powered-off. Anti-ice will automatically function in the event of an electrical failure.

75-10 Engine Anti-Ice

See RR300 Series Operation and Maintenance Manual (OMM) for anti-ice system maintenance.

Intentionally Blank

CHAPTER 76

ENGINE CONTROLS

Section	Title	Page
76-00	Description	76.1
76-10	Fuel Control Unit (FCU)	76.1
76-11	FCU Throttle Control Rigging	76.3
76-12	FCU Fuel Cutoff Control Rigging	76.3
76-20	Power Turbine Governor (PTG)	76.5
76-21	PTG Control Rigging	76.5
76-22	PTG Rigging Check	76.7

Intentionally Blank

CHAPTER 76

ENGINE CONTROLS

76-00 Description

A twist grip throttle control is located on each collective stick. The controls are interconnected and actuate the Rolls-Royce engine model 250-C300/A1 fuel control input lever via a push-pull cable. The throttle is normally not used for control but is set either fully closed (idle position) or fully open.

The engine incorporates a hydromechanical governor which attempts to maintain 100% engine output shaft RPM when the throttle is in the open position. A linkage provides the power turbine governor with collective inputs to help anticipate changing power demands.

Large power changes or varying environmental conditions may cause the governor RPM setting to vary by a few percent. A momentary toggle switch (beep switch) on the collective stick is provided to trim, or "beep", the governor setting to the desired RPM. The switch controls an actuator which adjusts the linkage between the collective and power turbine governor. Holding the beep switch up or down will change rotor RPM approximately one percent per two seconds.

The governor controls RPM under normal conditions. It may not prevent over- or under-speed conditions generated by aggressive flight maneuvers or rapid power changes.

Other engine controls include a push-pull fuel cutoff control on the console face, a start button on the pilot's collective, a key-type igniter switch, and an anti-ice switch.

76-10 Fuel Control Unit (FCU)

A. Removal

1. Pull fuel valve OFF. Remove engine cowling assembly per § 53-21.
2. Refer to Figure 76-1. Remove fasteners securing C522-10 throttle and A522-10 fuel cutoff control inner wires to FCU throttle and fuel cutoff levers.
3. Remove fasteners securing control housings and AN742-4 clamps to F577 bracket assemblies, as required.
4. Remove FCU per RR300 Series Operation and Maintenance Manual (OMM).
5. If sending FCU to repair facility, remove D930-2 spring.

B. Installation

1. If removed, install D930-2 spring.
2. Install FCU per RR300 Series Operation and Maintenance Manual (OMM).
3. Perform throttle control rigging per § 76-11.
4. Perform fuel cutoff control rigging per § 76-12.
5. Push fuel valve ON.

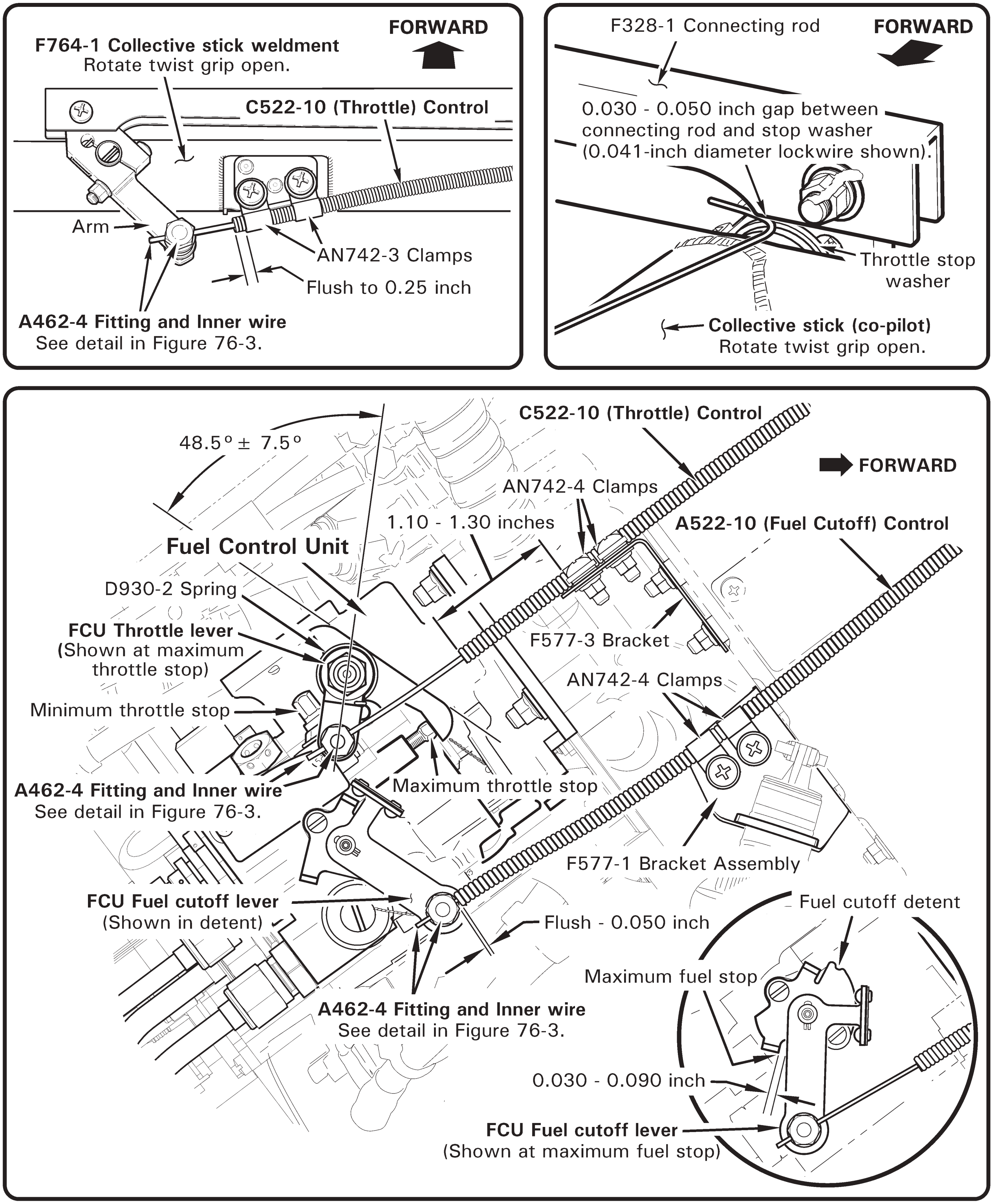

FIGURE 76-1 FUEL CONTROL UNIT

76-11 FCU Throttle Control Rigging

1. Remove engine cowling assembly per Section 53-21. Remove F461-1 collective cross tube cover and (copilot) F680-1 collective cover assembly (see Section 6-70).
2. Refer to Figure 76-1. Verify FCU throttle lever rigging angle is 48.5° ± 7.5°. As required, remove hardware securing serrated levers and reposition to proper angle. Install hardware, special torque nut per Section 20-33, & torque stripe per Figure 5-1.
3. Remove palnuts and loosen nuts securing A462-4 fittings and C522-10 (throttle) control inner wire to collective arm and to FCU throttle lever.
4. Position forward end of control housing flush-0.25 inch at or beyond edge of outboard AN742-3 clamp and install fasteners securing housing and clamps to F764-1 collective stick weldment.
5. Refer to detail in Figure 76-3. Rotate collective stick twist grip open. Position inner wire 0.10-0.30 inch beyond outboard edge of fitting in collective arm, and special torque fitting nut per Section 20-33. Install palnut, standard torque per Section 20-32, & torque stripe per Figure 5-1.
6. Position aft end of control housing 1.10-1.30 inches beyond edge of aft AN742-4 clamp and install fasteners securing housing and clamps to F577-3 bracket.
7. Refer to detail in Figure 76-3. Rotate twist grip closed; rotate and hold FCU throttle lever to contact idle stop. Verify sufficient inner wire beyond aft edge of fitting, and special torque fitting nut per Section 20-33.
8. Rotate twist grip open; verify FCU throttle lever contacts maximum throttle stop, and 0.030-0.050 inch gap between F328-1 connecting rod and throttle stop washer. Reposition fitting on wire as required until proper rod-to-washer gap, and FCU throttle lever contacts maximum throttle stop with twist grip open, and idle stop with twist grip closed.
9. Install fitting palnut, standard torque per Section 20-32, and torque stripe per Figure 5-1. Trim control wire 0.10-0.30 inch beyond aft edge of fitting.
10. Install collective cross tube cover and collective cover assembly. As required, perform FCU fuel cutoff control rigging per Section 76-12, or install engine cowling assembly per Section 53-21.

76-12 FCU Fuel Cutoff Control Rigging

1. Remove engine cowling assembly per Section 53-21.
2. Refer to Figure 76-1. Remove palnut and loosen nut securing A462-4 fitting and A522-10 (fuel cutoff) control inner wire to FCU fuel cutoff lever.
3. Rotate FCU fuel cutoff lever into OFF detent; pull fuel cutoff control knob OFF (at lower console). Position end of control housing flush-0.050 inch from forward edge of fitting and install fasteners securing housing and AN742-4 clamps to F577-1 bracket assembly.
4. Refer to detail in Figure 76-3. Verify sufficient inner wire beyond aft edge of fitting, and special torque fitting nut per Section 20-33.

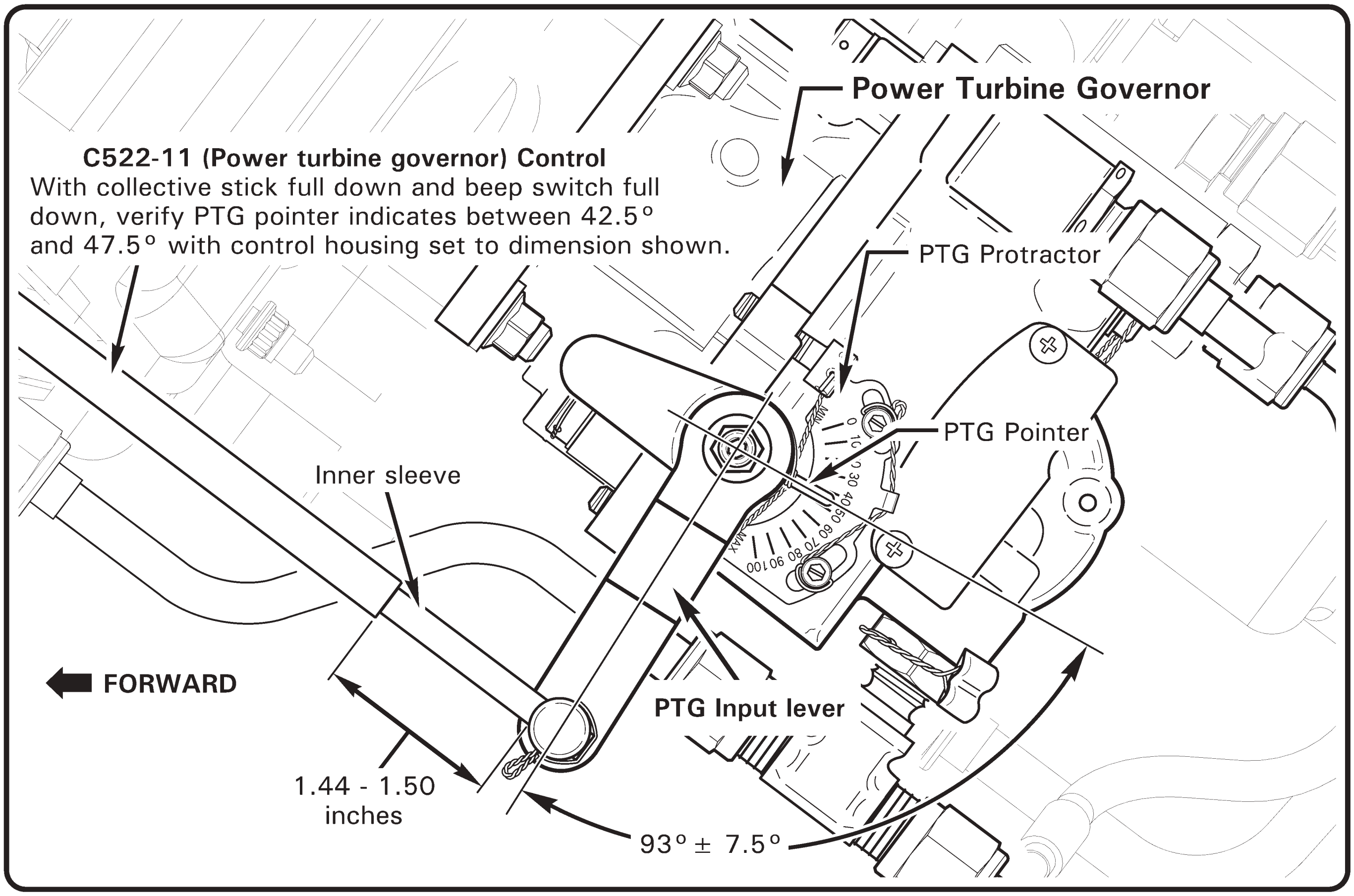

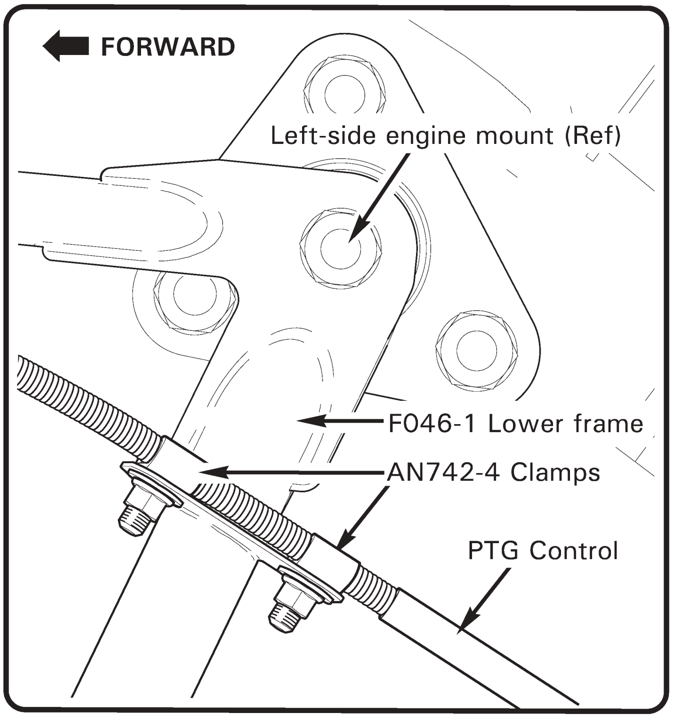

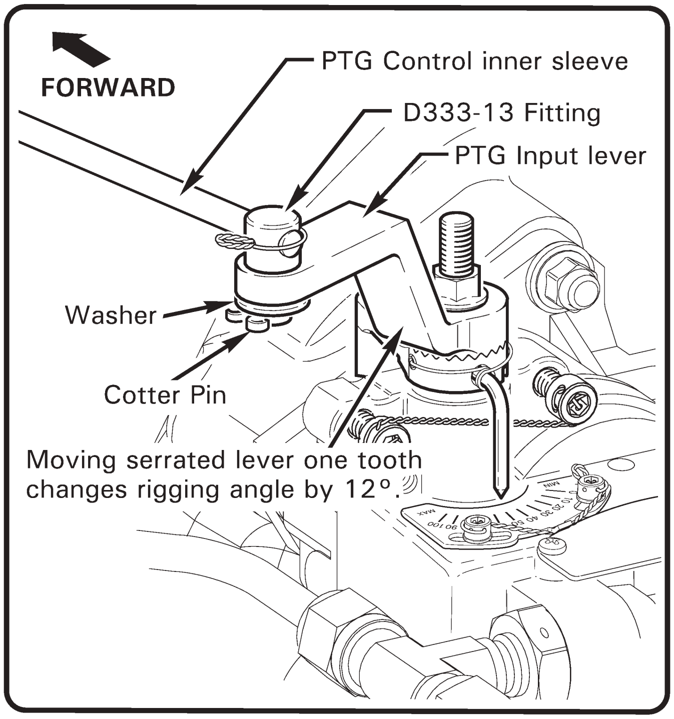

FIGURE 76-2 POWER TURBINE GOVERNOR

76-12 FCU Fuel Cutoff Control Rigging (continued)

5. Push fuel cutoff control knob ON and verify FCU fuel cutoff lever-to-maximum fuel stop clearance is 0.030-0.090 inch. Reposition fitting on wire as required until FCU fuel cutoff lever rests in detent when control is OFF and has required clearance from maximum fuel stop when control is ON.
6. Install fitting palnut, standard torque per Section 20-32, and torque stripe per Figure 5-1. Trim control wire 0.10-0.30 inch beyond aft edge of fitting.
7. Install engine cowling assembly per Section 53-21.

76-20 Power Turbine Governor (PTG)

Refer to R66 Illustrated Parts Catalog (IPC) Figures 76-5 and 76-7.

A. Removal

1. Remove engine cowling assembly per Section 53-21.
2. Refer to Figure 76-2. Remove cotter pin and washer securing C522-11 (power turbine governor) control inner sleeve and D333-13 fitting to PTG input lever.
3. Remove fasteners securing control housing and AN742-4 clamps to F046-1 lower frame, as required.
4. Remove PTG per RR300 Series Operation and Maintenance Manual (OMM).

B. Installation

1. Install PTG per RR300 Series Operation and Maintenance Manual (OMM).
2. Perform PTG control rigging per Section 76-21.

76-21 PTG Control Rigging

1. Remove engine cowling assembly per Section 53-21. Detach center back rest assembly hook and loop tape (Velcro) at bottom; slide back rest assembly up and out of keyhole slots. Remove F474-2 middle seat cover (see Section 6-70).
2. Refer to Figure 76-2. Verify PTG input lever rigging angle is 93.0° ± 7.5°. As required, remove hardware securing serrated levers and reposition to proper angle. Install hardware, special torque nut per Section 20-33, and torque stripe per Figure 5-1.
3. Refer to Figure 76-3. Remove palnut and loosen nut securing A462-4 fitting and C522-11 (power turbine governor) control inner wire to F822-1 bellcrank assembly.
4. Position PTG pointer to indicate 45° on PTG protractor. Position aft end of control housing 1.44-1.50 inches from forward edge of D333-13 fitting and install fasteners securing housing and AN742-4 clamps to F046-1 lower frame.
5. Position forward end of control housing flush-0.25 inch at or below edge of bottom AN742-3 clamp and install fasteners securing housing and clamps to F381-6 bracket.
6. Turn BATTERY switch ON. With collective stick full down, “beep” collective toggle switch to full down. Turn BATTERY switch OFF.

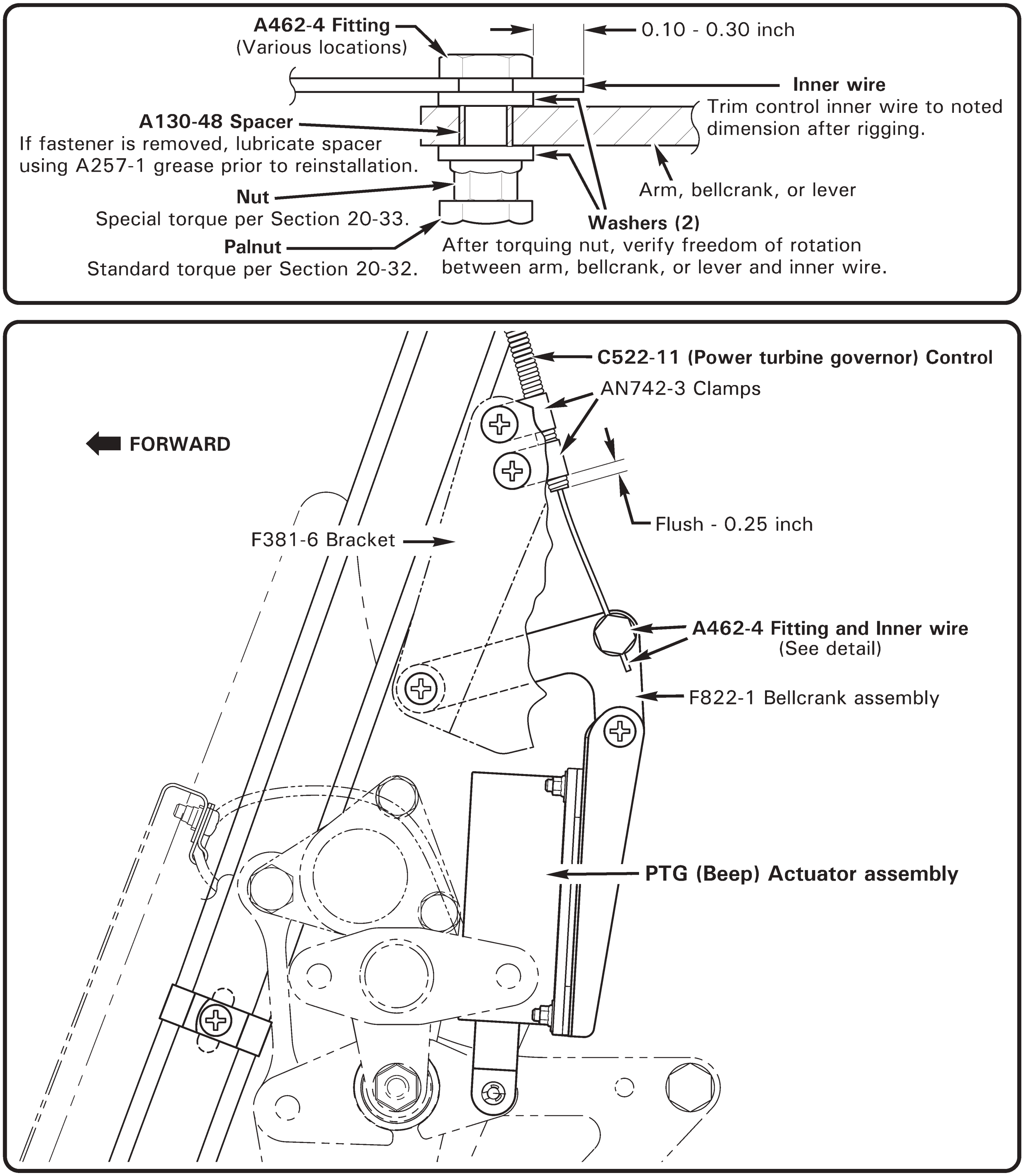

FIGURE 76-3 PTG (BEEP) ACTUATOR ASSEMBLY

76-21 PTG Control Rigging (continued)

7. Verify PTG pointer indicates 45° on PTG protractor, verify sufficient inner wire beyond bottom edge of bellcrank fitting, and special torque fitting nut per Section 20-33.
8. Install palnut, standard torque per Section 20-32, and torque stripe per Figure 5-1. Trim control wire 0.10-0.30 inch beyond bottom of fitting.
9. Perform PTG rigging check per Section 76-22.
10. Install engine cowling assembly per Section 53-21. Install middle seat cover. Install back rest assembly in keyhole slots and slide down; press firmly on back rest assembly hook and loop tape at bottom. Verify security.

76-22 PTG Rigging Check

1. Turn BATTERY switch ON.
2. Refer to Figure 76-2. With collective stick full down, “beep” collective toggle switch to full down. Verify PTG pointer indicates between 42.5° and 47.5° on PTG protractor. Turn BATTERY switch OFF.
3. Adjust PTG control rigging as required per Section 76-21; repeat previous steps until PTG is rigged for proper mechanical range.
4. Run-up helicopter per R66 Pilot's Operating Handbook, Section 4. Verify “beep” range is 97 to 103% rotor RPM with collective full down and twist grip open.
5. Adjust PTG control rigging as required per Section 76-21; repeat previous steps until PTG is rigged for proper operational range.

Intentionally Blank

CHAPTER 79

ENGINE OIL SYSTEM

Section	Title	Page
79-00	Description	79.1
79-10	Scroll and Fanwheel Assemblies	79.3
79-11	Fanwheel-to-Inlet Gaps	79.3
79-20	Oil Tank Assembly	79.5
79-21	Oil Temperature Sender	79.6
79-22	Sight Gage	79.7
79-30	Engine Oil Cooler	79.7
79-40	Engine Oil Filter	79.7
79-50	Engine Oil Line Assemblies and Fittings	79.8

Intentionally Blank

CHAPTER 79

ENGINE OIL SYSTEM

79-00 Description

The R66 helicopter has a dry-sump engine oil system. Oil is stored in a remote tank located in the main rotor gearbox compartment. Refer to Section 12-60 for oil servicing instructions. A Rolls-Royce-supplied oil temperature sender is mounted on the inboard side of the oil tank.

Oil circulates through the engine oil system via three oil delivery lines. Refer to Figure 79-1. Cool oil exits the oil tank and enters the engine, hot oil exits the engine and enters the engine oil cooler, and cooled oil exits the oil cooler and returns to the oil tank. An oil tank vent line is plumbed to the engine accessory gearbox, which is vented to the exhaust pipe.

The engine oil cooler has an internal thermostat (thermostat initial closure 70°C, full closure 81°C) and pressure relief valve. The thermostat maintains normal system operating pressure by allowing cool oil to bypass the heat exchanger and return to the oil tank. Higher than normal system pressure will open a pressure relief valve. When draining the oil system, residual oil is trapped in the bottom corner of the oil cooler due to the oil cooler installation angle in the R66. An oil cooler drain plug allows the technician to drain trapped oil during servicing.

The engine oil system includes an oil pump, oil filter and regulating valve, an oil sump tank, a check valve, and two magnetic plug inserts. Refer to RR300 OMM for a complete description of the engine oil system.

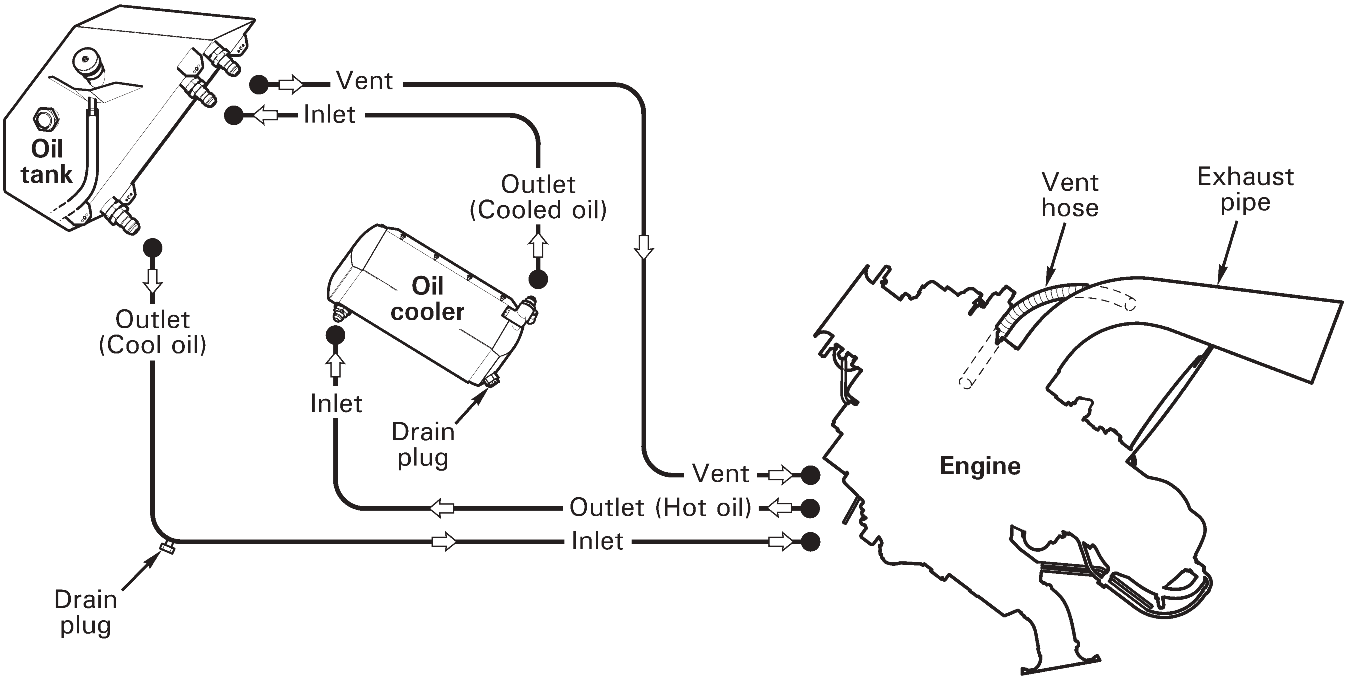

FIGURE 79-1 ENGINE OIL SYSTEM SCHEMATIC

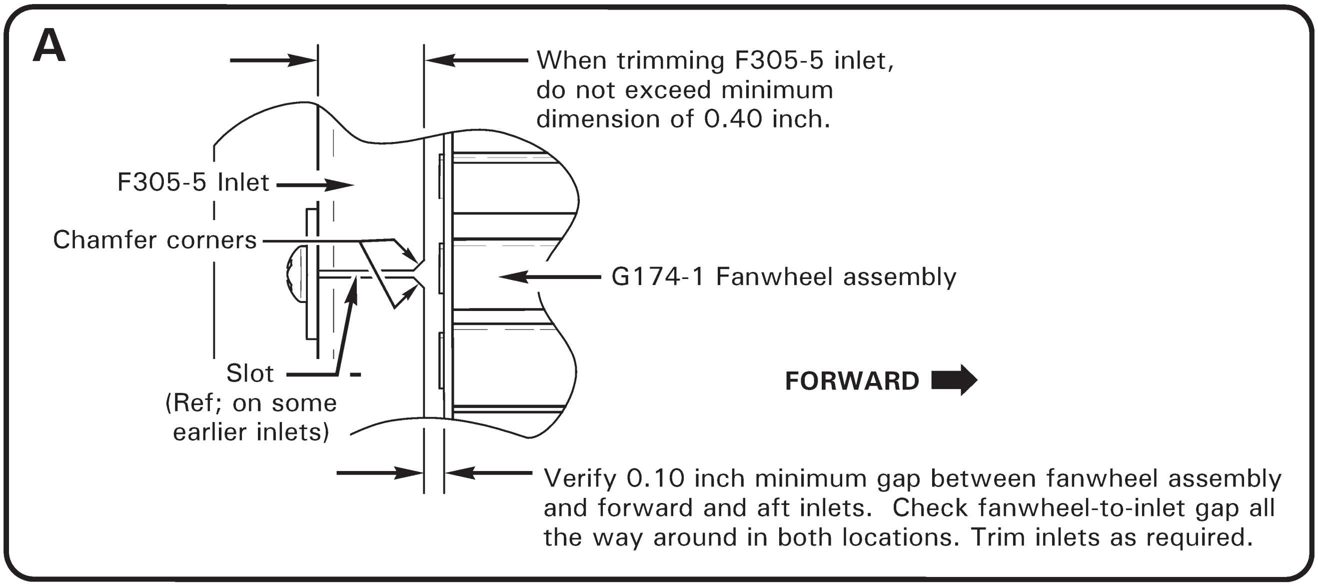

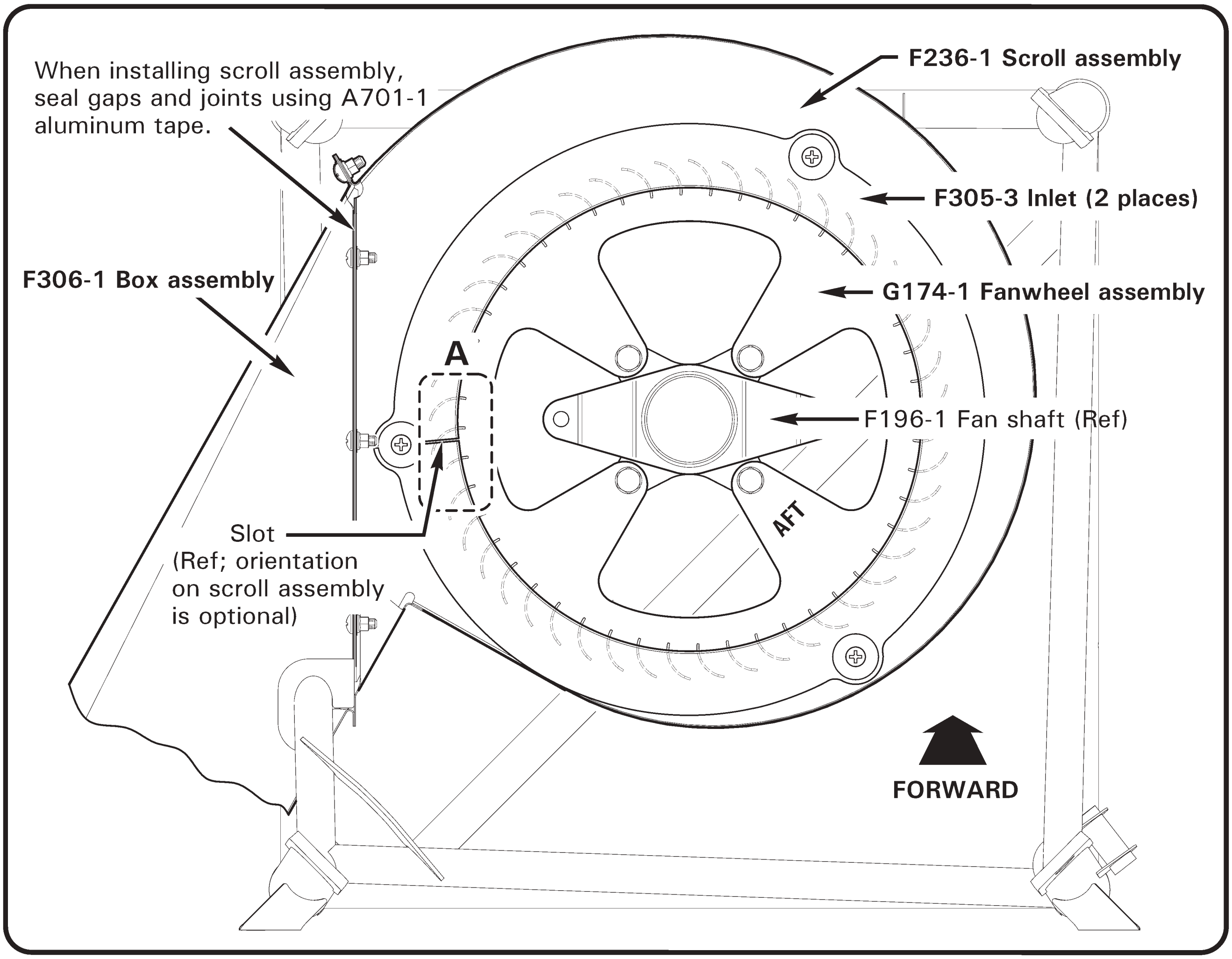

FIGURE 79-2 SCROLL AND FANWHEEL ASSEMBLIES

79-10 Scroll and Fanwheel Assemblies

A. Removal

1. Remove F196-1 fan shaft per § 65-10.
2. Refer to Figure 79-2. Remove perimeter screws securing F236-1 scroll assembly to F306-1 box assembly.
3. Remove aluminum tape sealing gaps & joints, or gently pull scroll away from box assembly and, using a scribe or similar sharp instrument, tear aluminum tape sealing gaps & joints. Remove scroll, with G174-1 fanwheel assembly inside, up through frame.
4. Remove hardware securing forward or aft F305-5 inlet to scroll; remove inlet & fanwheel. Remove damaged aluminum tape from scroll and box assembly.

B. Installation

1. Refer to Figure 79-2. Observing "AFT" orientation marking on fanwheel plate, place G174-1 fanwheel assembly inside F236-1 scroll assembly accordingly. Position F305-5 inlets on scroll and install hardware. Verify security.
2. Lower scroll, with fanwheel inside, through frame and install hardware securing scroll to F306-1 box assembly. Verify security. Seal gaps & joints using A701-1 aluminum tape.
3. Install F196-1 fan shaft per § 65-10.

79-11 Fanwheel-to-Inlet Gaps

A. Measuring Gap

1. Remove tailcone cowling assembly per § 53-23.
2. Refer to Figure 79-2. Verify 0.10 inch minimum gap between G174-1 fanwheel assembly and forward and aft F305-5 inlets. Check gap all the way around; rotate fanwheel and check gap again (several positions). If gap is within limits at forward and aft inlets, no further action is required.
3. Verify proper tail rotor driveline shimming per § 65-30.
4. Trim inlets as required per Part B.
5. Install tailcone cowling assembly per § 53-23.

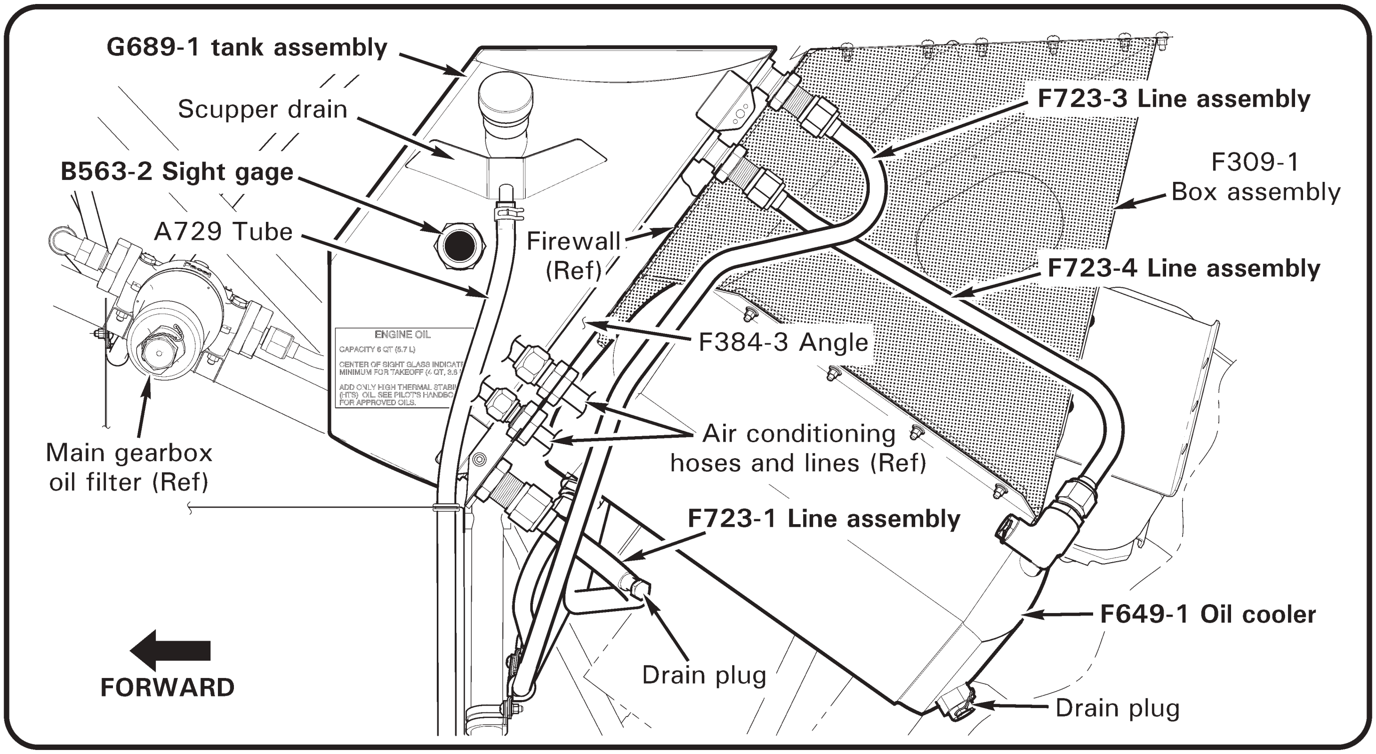

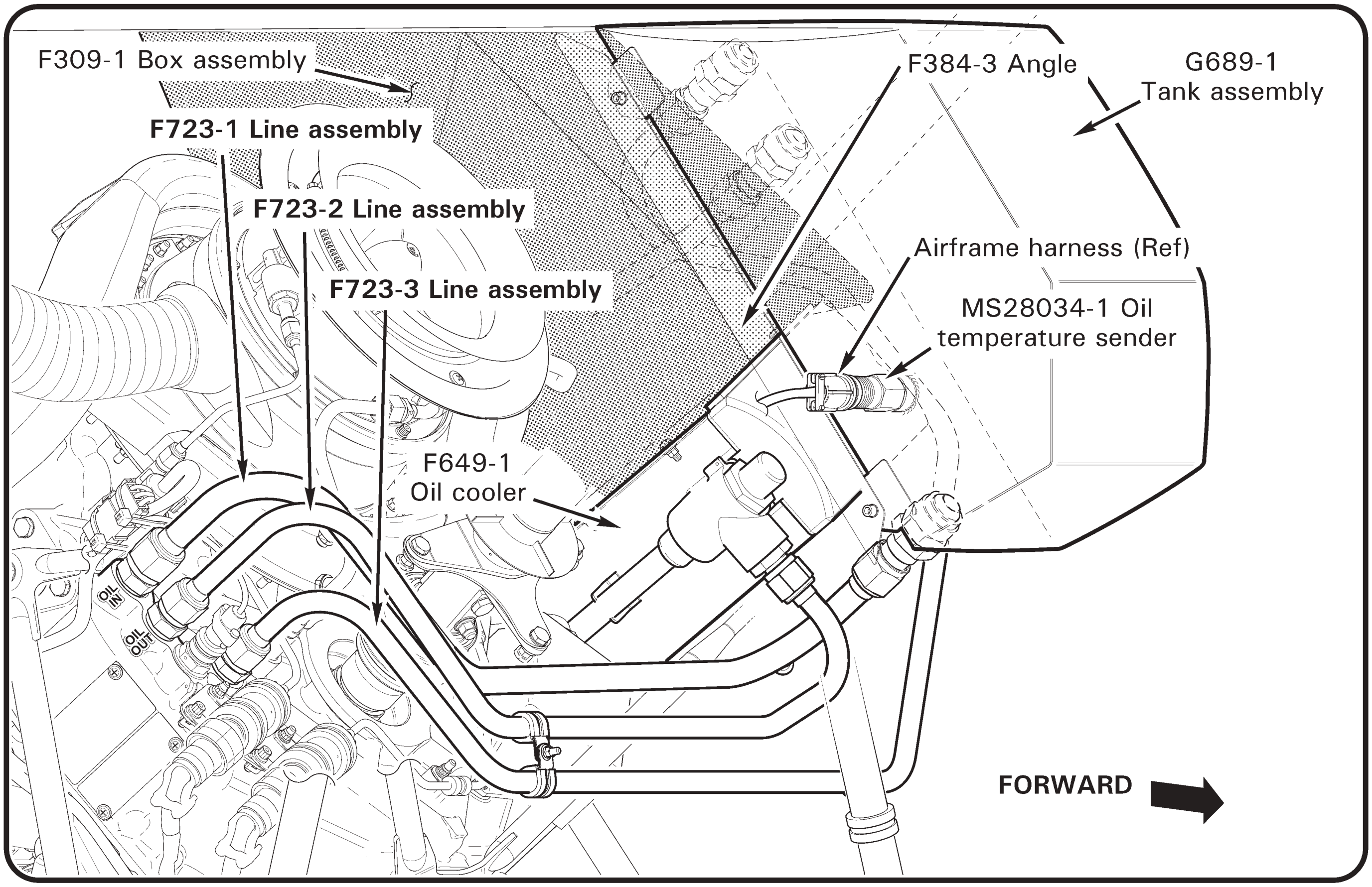

FIGURE 79-3 ENGINE OIL SYSTEM

79-11 Fanwheel-to-Inlet Gaps (continued)

B. Trimming Inlets

1. Refer to Figure 79-2. Remove hardware securing F305-5 inlets to F236-1 scroll assembly.
2. If inlets are slotted, carefully twist inlets over F196-1 fan shaft and remove inlets. If inlets are not slotted, remove hardware securing fan shaft to C947-3 plate assemblies, noting hardware removed, and remove inlets.
3. Refer to Figure 79-2, Detail A. Trim inlets as required to meet minimum fanwheel-to-inlet gap. Do not exceed minimum inlet dimensions.
4. Refer to § 20-70. Smooth inlet edges and coat bare metal with primer. Touch-up primed area using dark gray Dupont Imron polyurethane enamel in accordance with paint manufacturer's recommendations.
5. If inlets are slotted, carefully twist inlets over fan shaft and install hardware securing inlets to scroll assembly (slot orientation is optional). Verify security.
6. If inlets are not slotted, install inlets around fan shaft and install hardware securing inlets to scroll assembly. Verify security. Install hardware securing fan shaft to plate assemblies, standard torque hardware per § 20-32, and torque stripe per Figure 5-1.
7. Measure fanwheel-to-inlet gaps per Part A. Repeat procedure as required for minimum 0.10 inch gap at forward and aft inlets.

79-20 Oil Tank Assembly

A. Removal

1. Drain engine oil per § 12-60.
2. Remove tailcone cowling assembly per § 53-23; open main gearbox access door.
3. Air-conditioned ships: Recover refrigerant per § 12-81. Using backup wrench, disconnect G794-2 & G794-3 hose assemblies from G810-1 & G811-1 line assemblies; cap fittings.
4. Refer to Figure 79-3. Remove D277-8 clamp or cut and discard safety wire securing A729 tube to G689-1 tank assembly scupper drain. Pull tube off of drain.
5. Disconnect airframe harness from MS28034-1 oil temperature sender.
6. Disconnect F723-1, F723-3, and F723-4 line assemblies from oil tank and associate components; cap fittings.
7. Remove nuts securing tank to firewall.
8. Remove hardware securing tank to F384-3 angles and remove tank through access door.

79-20 Oil Tank Assembly (continued)

B. Installation

1. Torque check associated oil cooler and engine unions per § 20-33.
2. Refer to Figure 79-3. Position G689-1 tank assembly in helicopter and install hardware securing tank to F384-3 angles. Verify security.
3. Install nuts securing tank to firewall and special torque nuts per § 20-33.
4. Remove caps and connect F723-1, F723-3, and F723-4 line assemblies to tank and associate components. Using backup wrench, special torque line nuts per § 20-33.
5. Torque stripe fittings per Figure 5-1.
6. Connect airframe harness to MS28034-1 oil temperature sender. Verify security.
7. Secure A729 tube to tank scupper drain using D277-8 clamp; verify security.
8. Service engine oil per § 12-60.
9. Air-conditioned ships: Torque check nuts at firewall per § 20-33. Remove caps and connect G794-2 & G794-3 hose assemblies to G810-1 & G811-1 line assemblies. Using backup wrench, special torque hose nuts per § 20-33. Charge system per § 12-81.
10. Install tailcone cowling assembly per § 53-23.

79-21 Oil Temperature Sender

A. Removal

1. Drain engine oil per § 12-60.
2. Remove tailcone cowling assembly per § 53-23.
3. Refer to Figure 79-3. Disconnect airframe harness from MS28034-1 oil temperature sender.
4. Remove sender from G689-1 tank assembly; discard packing. Tape tank opening.

B. Installation

1. Refer to Figure 79-3. Install (new) packing on MS28034-1 oil temperature sender. Remove tape, install sender in G689-1 tank, and special torque sender per § 20-33.
2. Connect airframe harness to sender; verify security.
3. Service engine oil per § 12-60.
4. Install tailcone cowling assembly per § 53-23.

79-22 Sight Gage

A. Removal

1. Drain engine oil per § 12-60.
2. Refer to Figure 79-3. Remove B563-2 sight gage from G689-1 tank assembly. Discard o-ring; tape tank opening.

B. Installation

1. Refer to Figure 79-3. Remove tape and verify G689-1 tank assembly interior is free of contaminants.
2. Lubricate (new) o-ring using A257-18 lubricant. Install o-ring on B563-2 sight gage, and install gage in tank. Special torque gage per § 20-33.
3. Service engine oil per § 12-60.

79-30 Engine Oil Cooler

A. Removal

1. Drain engine oil per § 12-60.
2. Refer to Figure 79-3. Remove hardware securing F649-1 oil cooler to F309-1 box assembly.
3. Support oil cooler without damaging oil cooler fins. Disconnect F723-2 and F723-4 line assemblies from oil cooler and associated components; cap fittings.

B. Installation

1. Refer to Figure 79-3. Install hardware securing F649-1 oil cooler to F309-1 box assembly.
2. Torque check associated oil cooler and engine unions per § 20-33.
3. Remove caps and connect F723-2 and F723-4 line assemblies to oil cooler and associated components. Using backup wrench, special torque line nuts per § 20-33.
4. Torque stripe fittings per Figure 5-1.
5. Service engine oil per § 12-60.

79-40 Engine Oil Filter

Maintain engine's oil system per RR300 OMM.

> NOTE
>
> During engine oil filter servicing, if filter is contaminated, replace engine oil cooler and flush oil lines.

79-50 Engine Oil Line Assemblies and Fittings

A. Removal

1. Drain engine oil per § 12-60.
2. Refer to Figure 79-3. Remove hardware securing F723 line assembly clamps.
3. Disconnect line assembly from associated components; cap fittings. Remove line.

B. Installation

1. Refer to Figure 79-3. Torque check associated oil cooler and engine unions per § 20-33.
2. Remove caps and connect F723 line assembly to associated components. Using backup wrench, special torque line nuts per § 20-33.
3. Install hardware securing line assembly clamps. Verify security.
4. Torque stripe fittings per Figure 5-1.
5. Service engine oil per § 12-60.

CHAPTER 90

POLICE VERSION

Section	Title	Page
90-00	Description	90.1
90-10	C023-34 Tailcone Assembly	90.5
90-20	C060-3 Interior Light Installation	90.5
90-30	C069 Cyclic Control Assembly	90.5
90-40	C430-2 Five-Point Harness Installation (Optional)	90.5
90-50	C599 Airspeed Indicator	90.5
90-60	C813 Transceiver Installation (Optional)	90.6
90-70	C823-16 Audio Control Installation	90.8
90-80	C849-4 Blower Installation (Optional)	90.9
90-90	D301 Ballast Installation	90.10
90-100	F003-19 Seat Removal	90.10
90-110	F014-5 Landing Gear Installation	90.10
90-120	F036-3 Battery Installation	90.10
90-130	F051-1 Camera System Installation	90.11
90-140	F060 Intercom System Installation	90.12
90-150	F075-2 EFIS Installation	90.13
90-151	C831-12, -13, & -14 (GTN XXX-Series) GPS/NAV/COM Installation	90.13
90-152	G060-4 (Garmin G500H) Upper Console Assembly	90.13
90-155	F075-8 EFIS Installation	90.14
90-156	F817-9 (Garmin G500H) GDU 1060 Display (R66 Police) Installation	90.14
90-157	F818-11 (G070 Console) GTN 6XX-series GPS/NAV/COM Installation	90.14
90-158	G070-7 (8-Instrument, High) Upper Console Assembly	90.14
90-160	F079-1 PA/Siren System Installation	90.15
90-170	F081 Searchlight Installation	90.17
90-180	F082-21 Fairing Installation	90.18
90-190	G415-1 DVR Installation (Optional)	90.18
90-200	G416 Monitor Installation	90.19
90-210	G423-1 Aux Electrical System Installation	90.21
90-220	G425-1 Wall Installation	90.21
90-230	G437-1 Lojack Installation	90.22
90-240	G460 Audio Control Installation	90.23
90-250	G608 GPS Mapping System Installation	90.24
90-260	G685 Aux Strobe Installation	90.26
90-270	G749-1 Console Installation	90.27
90-280	Wiring Schematics	90.29

Intentionally Blank

CHAPTER 90

POLICE VERSION

90-00 Description

The Police Version is equipped with a nose-mounted gyro-stablized infrared camera, a flat screen monitor for viewing camera images, a video recorder, and a belly-mounted searchlight. Optional FM transceivers, a PA/Siren, Lojack equipment, and a GPS mapping system may also be installed. A dedicated, non-essential electrical bus distributes power to police equipment, and extended landing gear provides additional ground clearance for the camera and searchlight.

The R66 is a four-place helicopter when police equipment is installed.

Basic descriptions of police equipment and systems are given below. More detailed information can be found in manufacturer's documents supplied with individual pieces of equipment.

Some aircraft have a cockpit configuration that does not include the left side cyclic grip in order to prevent interference with the observer's LCD monitor.

There are two basic cockpit configurations (refer to R66 Pilot's Operating Handbook Section 9 Police Version Supplement for illustrations). One configuration uses a modified cyclic control without a left-side grip because the flat screen monitor would interfere. The second configuration uses the standard cyclic control with a left-side grip.

An additional circuit breaker panel on the ledge just forward of the pilot's seat contains all circuit breakers for police equipment. Depending on installed police options, the outboard section of the aft row of circuit breakers may be a 14-volt bus powered by a 28- to 14-volt converter. The police equipment master switch on the left side of the panel controls power to all police equipment.

> NOTE
>
> Police circuit breaker panel will not be powered by police equipment master switch unless avionics switch is also on.

Wiring for police equipment is in a separate harness and occupies portions of the main baggage compartment, right side under seat compartments, and right rear footwell. Protective covers isolate the wiring harness as appropriate.

Audio control panel(s) to accommodate police radios and other equipment are installed. The audio system receives power from the audio breaker on the main (left hand) circuit breaker panel. It is not connected to the police equipment master switch.

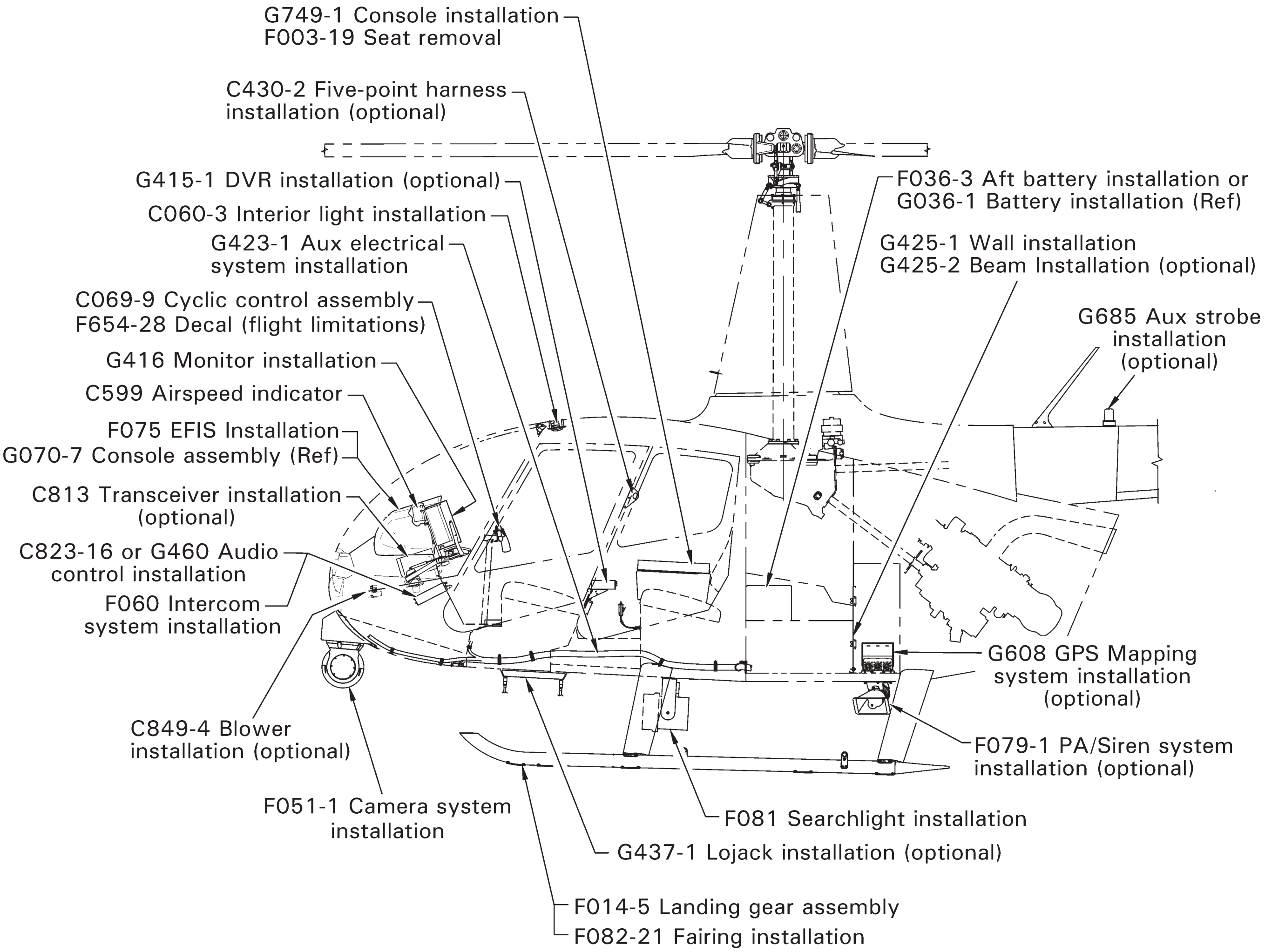

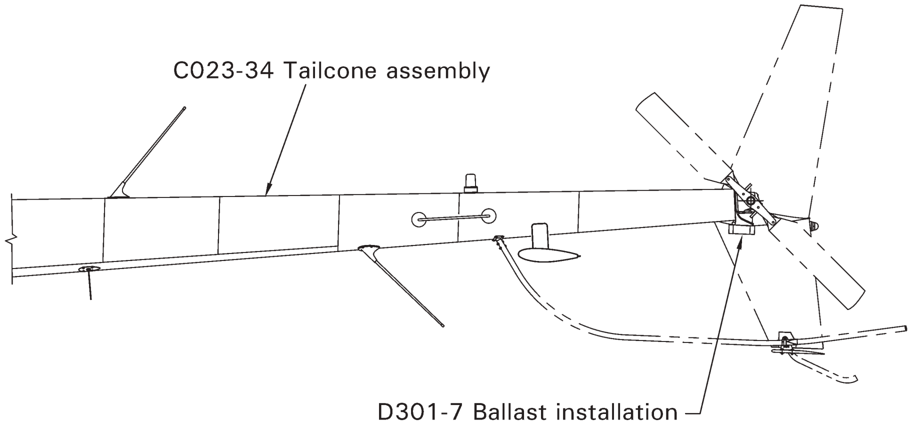

FIGURE 90-1 POLICE VERSION

90-00 Description (continued)

A transmit switch for the left front seat is provided on the floor near the observer’s right heel. An intercom switch for the left front seat is provided either near the observer’s right heel or at the outboard base of the seat box. An optional transmit switch for the left rear seat is also available. The optional switch is handheld on a cord which plugs into a jack beneath the left rear seat ICS button. Transmit functionality is tied to the selection on the observer’s audio panel.

The center rear seat has been replaced with an arm rest and storage console.

Baggage is not permitted in the right rear under-seat compartment due to electronic equipment and wiring in that compartment.

An interior wall has been added to the main baggage compartment to create an electronic equipment compartment at the aft end.

Extended forward landing gear struts provide additional ground clearance for the camera and searchlight. The ground clearance at the tail is reduced by approximately 8 inches with the helicopter parked.

The infrared camera system consists of a gyro-stabilized, gimbal-mounted infrared/video camera in the chin and a power junction box in the main baggage compartment behind the interior wall. The camera is operated by the observer in the left front seat via a handheld controller. A tray and strap forward of the circuit breaker panel are provided for controller stowage when not in use.

A flat screen LCD monitor is located in front of the left front seat to display camera images.

For the earlier cockpit configuration, the monitor is equipped with a visor to minimize glare. The monitor mount is hinged to retract forward and down, out of the observer’s way, when not in use.

For the later cockpit configuration, the monitor has no visor but is easily dimmed using a knob on its front face. The monitor mount is hinged on its inboard edge, and the monitor folds back against the left side of the instrument console, out of the observer’s way, when not in use.

The optional digital video recorder (DVR) is mounted just aft of the space between the front backrests and controlled by a switch at the observer’s station. The DVR can record images from the camera and play them back on the LCD monitor.

90-00 Description (continued)

The searchlight is installed on a motorized gimbal under the belly. The searchlight power junction box is located in the right rear under-seat compartment. The searchlight is steerable in azimuth and elevation and is operated from the left front seat via a remote control. An optional slaving system allows the searchlight to be slaved to follow the camera. The searchlight should be stowed horizontally when not in use to minimize chance of damage during a hard landing.

CAUTION

The searchlight is very bright and can disorient other pilots or ground personnel at long distances.

CAUTION

The searchlight beam is hot. Exposure to the beam at close range for more than a few seconds can result in burns.

An additional observer-side interior light is operated via a momentary foot switch on the left-hand forward floor. Power is supplied to the interior light via the “GAGES” breaker in the left hand circuit breaker panel and is not disconnected by the police equipment master switch.

A 100-watt speaker is located on the aircraft belly near the left rear landing gear strut. The PA system control panel is located in the avionics stack and allows the pilot or observer to select PA, radio, yelp, or siren for broadcast through the speaker.

A multi-band FM transceiver may be mounted either next to the LCD monitor or in the main avionics stack. The FM transceiver band(s) are selectable from the audio control panel(s).

The Lojack installation consists of a receiver installed in the main baggage compartment behind the interior wall, a display and control unit on the right side of the instrument console, and four belly-mounted stub antennas. Lojack is used to track stolen vehicles equipped with Lojack transmitters.

The GPS mapping computer is installed in the main baggage compartment behind the interior wall and allows an overhead view of the helicopter’s area of operation to be displayed on the LCD monitor. The computer contains a database of streets, landmarks, and topography enabling direct navigation to street addresses and other points on the ground. The computer is accessed using a keyboard below the LCD monitor. An optional inertial monitoring unit can interface with the computer to keep the camera and/or searchlight trained on a fixed ground location while the helicopter maneuvers.

90-10 C023-34 Tailcone Assembly

Refer to Figure 90-1. The C023-34 tailcone assembly has provisions for two upper-mounted antennas and two lower-mounted antennas and NAV. Refer to § 6-80 for antenna locations.

Refer to § 53-40 for tailcone assembly maintenance procedures.

90-20 C060-3 Interior Light Installation

Refer to Figure 90-1. The C060-3 interior light installation is installed above the observer's seat, and has a floor-mounted switch.

A. Schematic

Refer to Figure 90-2 for C060-3 interior light installation wiring schematic.

90-30 C069 Cyclic Control Assembly

Refer to Figure 90-1. On earlier Police helicopters, the C069-9 cyclic control assembly was modified for clearance with the LCD monitor. The copilot removable grip assembly (transmit wiring) was omitted and the C058-11 grip weldment was plugged. A second grip was installed on the cyclic stick.

Refer to § 67-10 for cyclic control and grip assembly maintenance procedures.

A. Schematic

Refer to Figure 90-3 for C058-11 grip assembly wiring schematic.

90-40 C430-2 Five-Point Harness Installation (Optional)

Refer to Figure 90-1. The C430-2 five-point harness installation was optional equipment for earlier Police helicopters, and now is optional for all R66 Turbines (see § 6-10 for version descriptions).

Refer to § 25-10 for seat harness maintenance procedures.

90-50 C599 Airspeed Indicator

Police version airspeed limitations (130 knot Vne, KM/H) differ from standard version helicopters (140 knot Vne, KM/H) due to external equipment. On earlier Police helicopters, two indicators were available: one with kilometers per hour for primary markings and one with miles per hour for primary markings. On later Police helicopters, only an indicator with miles per hour for primary markings is approved.

Refer to § 95-22 for maintenance procedures. Refer to § 90-150 or § 90-155 EFIS Installation for equipment removal instructions prior to removing instrument face.

90-60 C813 Transceiver Installation (Optional)

A. Description

The Technisonic TDFM-600/6000/7000 series (C813-2; 5-band) and TDFM-9000 series (C813-4 and C813-5; 6-band) airborne transceivers are wired through the Technisonic A711L series audio control panel to allow for separate and simultaneous operation on each band. The C813-2 transceiver (earlier Police helicopters) is located at the observer's station. The C813-4 and C813-5 transceivers (separate installations) are located in the instrument panel for pilot and observer access.

B. Schematic

Refer to Figure 90-4 for C813-2 transceiver installation wiring schematic.

Refer to Figure 90-5 for C813-4 transceiver installation wiring schematic.

Refer to Figure 90-6 for C813-5 transceiver installation wiring schematic.

C. Removal

C813-2 (Technisonic TDFM-600) Transceiver:

1. Refer to Figure 90-1. Turn battery & avionics switches off and pull out (7.5 amp) circuit breaker at panel.
2. Remove screws securing D413-2 cover to D413-1 box assembly.
3. Disconnect D613-4 harness assembly from C813-2 transceiver.
4. Release slotted turnlock fasteners securing transceiver to box assembly and remove transceiver.

C813-4 (Technisonic TDFM-9000) Transceiver:

1. Refer to Figure 90-1. Turn battery & avionics switches off and pull out (10 amp) circuit breaker at panel.
2. Release slotted turnlock fasteners securing C813-4 transceiver to avionics tray and remove transceiver.

C813-5 (Technisonic TDFM-9000) Transceiver:

1. Refer to Figure 90-1. Turn battery & avionics switches off and pull out (10 amp) circuit breaker at panel.
2. Remove screws securing G413-14 cover to G070 console assembly and remove cover.
3. Disconnect G458-1 harness assembly and antenna cables from C813-5 transciever.
4. Release slotted turnlock fasteners and remove transceiver.

90-60 C813 Transceiver Installation (Optional; continued)

D. Installation

C813-2 (Technisonic TDFM-600) Transceiver:

1. Refer to Figure 90-1. Turn battery & avionics switches off and pull out (10 amp) circuit breaker at panel.
2. Position C813-2 transceiver in D413-1 box assembly and engage slotted turnlock fasteners. Verify security.
3. Connect D613-4 harness assembly to transceiver and verify security.
4. Position D413-2 cover on box assembly and install screws; verify security.
4. Push in (7.5 amp) circuit breaker at panel. Turn battery & avionics switches on.
5. Perform appropriate functional checks per Technisonic Industries Limited Installation and Operating Instructions (supplied with unit). Turn battery & avionics switches off.

C813-4 (Technisonic TDFM-9000) Transceiver:

1. Refer to Figure 90-1. Turn battery & avionics switches off and pull out (10 amp) circuit breaker at panel.
2. Position C813-4 transceiver in avionics tray and engage slotted turnlock fasteners. Verify security.
3. Push in (10 amp) circuit breaker at panel. Turn battery & avionics switches on.
4. Perform appropriate functional checks per Technisonic Industries Limited Installation and Operating Instructions (supplied with unit). Turn battery & avionics switches off.

C813-5 (Technisonic TDFM-9000) Transceiver:

1. Refer to Figure 90-1. Turn battery & avionics switches off and pull out (10 amp) circuit breaker at panel.
2. Position C813-5 transciever in G070 console assembly and engage slotted turnlock fasteners. Verify security.
3. Connect G458-1 harness assembly and antenna cables to transciever. Verify security.
4. Install screws securing G413-14 cover to console assembly; verify security.
5. Push in (10 amp) circuit breaker at panel. Turn battery & avionics switches on.
6. Perform appropriate functional checks per Technisonic Industries Limited Installation and Operating Instructions (supplied with unit). Turn battery & avionics switches off.

90-60 C813 Transceiver Installation (Optional; continued)

E. Scheduled Maintenance and Inspections

Refer to Technisonic Industries Limited Installation and Operating Instructions.

F. Special Maintenance and Inspections

1. Turn battery & avionics switches off. Open circuit breaker panel and remove transceiver per Part C, as required.
2. Inspect condition of and verify no obvious damage to transceiver, avionics tray (if installed), copper bus bars, circuit breaker, and wiring. Verify no loose, chafed, or broken wires or terminals. Verify no evidence of arcing. Verify equipment security.
3. Secure circuit breaker panel and install transceiver per Part D, as required. Perform ground checks per last two steps of Part D.

90-70 C823-16 Audio Control Installation

A. Removal

1. Refer to Figure 90-1. Turn battery switch off. Pull-out associated circuit breaker.
2. Release four slot-head fasteners securing C823-16 audio control to radio tray, and remove audio control.

B. Installation

1. Refer to Figure 90-1. Turn battery switch off & pull-out associated circuit breaker.
2. Position C823-16 audio control into appropriate radio tray support and lock four slot-head fasteners.
3. Push-in associated circuit breaker & turn battery switch on. Perform post-installation function checks per the appropriate Northern Airborne Technology (NAT) Installation and Operation Manual (supplied with unit).

C. Schematic

Refer to Figure 90-7 for C823-16 audio control installation wiring schematic.

90-80 C849-4 Blower Installation (Optional)

Refer to Figure 90-1. The C849-4 blower installation is optional equipment for the Police Version.

A. Removal

1. Refer to Figure 90-1. Turn battery switch off & pull-out associated circuit breaker.
2. Remove screws securing securing B050-22 or -23 upper console assembly to F033-1 lower console assembly and hinge upper console aft. Protect instrument face with foam support or equivalent.
3. Cut and discard ty-raps as required and disconnect TB1-1.5D blower wiring from harness wiring at connectors.
4. Pull hose off of blower and tape hose and blower openings to prevent contamination.
5. Remove hardware securing blower to D651-1 bracket, and remove blower.

B. Installation

1. Refer to Figure 90-1. Turn battery switch off & pull-out associated circuit breaker.
2. Without pinching wiring, position TB1-1.5D blower on D651-1 bracket and install hardware. Verify security.
3. Remove tape and push hose onto blower. Verify security.
4. Connect blower wiring to harness at connectors and install ty-raps as required. Cinch ty-raps until snug without over-tightening and trim tips flush with heads.
5. Remove support and hinge B050-22 or -23 upper console assembly forward. Install screws securing upper console to F033-1 lower console assembly.
6. Push-in associated circuit breaker & turn battery switch on. Perform appropriate post-installation function checks. Turn battery switch off.

90-90 D301 Ballast Installation

CAUTION

Altering fixed ballast can appreciably affect helicopter center of gravity (CG).

CAUTION

Maximum allowable empennage ballast is 21.00 lb on Police Versions. One upper and one lower weight are required. Available combinations provide total weight of 3, 6, 9, 12, 15, & 21 lb.

Refer to Chapter 8-00 for weight and balance information.

90-100 F003-19 Seat Removal

A. Description

Police version helicopters have no aft center seat installed. The following equipment is omitted: F628-4 connector assembly, center F628-6 buckle assembly, F931-1 seat assembly, A752-3 angle, and associated hardware.

90-110 F014-5 Landing Gear Installation

Refer to Figure 90-1. The F014-5 (extended) landing gear installation provides clearance for the F081 searchlight installation. F239-5 and -6 forward struts (extended gear) are approximately 2 inches taller than F239-3 and -4 forward struts (standard gear).

Refer to Chapter 32 for landing gear maintenance procedures, and for extended gear minimum tail skid height.

90-120 F036-3 Battery Installation

Refer to Figure 90-1. The F036-3 (aft) battery installation was the only approved battery configuration for earlier Police Version helicopters, for weight and balance purposes. Additional installation configurations are permissible on later Police Version helicopters.

Refer to § 96-10 for battery maintenance procedures.

90-130 F051-1 Camera System Installation

A. Gimbal Assembly Removal

NOTE
Removal of nose-mounted camera causes a large shift in CG of empty helicopter. Calculate weight and balance prior to flight with camera removed to assure aft CG limit is not exceeded.

1. Refer to Figure 90-1. Turn battery switch off & pull-out associated circuit breaker.
2. Remove screws securing G412-1 fairing to chin. Carefully lower fairing until clear of gimbal assembly, and remove fairing.
3. Disconnect cables from gimbal assembly.
4. Supporting gimbal assembly, remove fasteners securing D349-3 plate to D349-1 supports, and remove gimbal.

B. Gimbal Assembly Installation

NOTE
Removal of nose-mounted camera causes a large shift in CG of empty helicopter. Calculate weight and balance prior to flight with camera removed to assure aft CG limit is not exceeded.

1. Refer to Figure 90-1. Turn battery switch off & pull-out associated circuit breaker.
2. Position gimbal assembly's D349-3 plate between D349-1 supports and install fasters. Standard torque nuts per Section 20-32 and torque stripe per Figure 5-1. Verify security.
3. Connect cables to gimbal assembly.
4. Carefully raise G412-1 fairing around gimbal assembly, position fairing on chin, and install screws. Verify security.
5. Push-in associated circuit breaker & turn battery switch on. Perform appropriate post-installation function checks. Turn battery switch off.

C. Controller Assembly Removal

1. Refer to Figure 90-1. Turn battery switch off & pull-out associated circuit breaker.
2. Disconnect D616-1 (FLIR camera) controller assembly plug from G458 harness receptacle and remove controller.
3. As required, remove screws securing D417-5 box to circuit breaker panel and remove box.

90-130 F051-1 Camera System Installation (continued)

D. Controller Assembly Installation

1. Refer to Figure 90-1. Turn battery switch off & pull-out associated circuit breaker.
2. If removed, position D417-5 box on circuit breaker panel and install screws. Verify security.
3. Connect D616-1 (FLIR camera) controller assembly plug to G458 harness receptacle. Verify security.
4. Push-in associated circuit breaker & turn battery switch on. Perform appropriate post-installation function checks. Turn battery switch off.
5. Holster controller assembly and secure with B219-4 strap assembly.

E. Electronics Control Unit Removal

1. Refer to Figure 90-1. Turn battery switch off & pull-out associated circuit breaker.
2. Remove G428-1 wall assembly per § 90-220.
3. Disconnect cable assemblies from 19206-2XX electronics control unit.
4. Remove MS27039C0805 screws securing control unit to D428-16 brackets and G429-10 support, and remove control unit.

F. Electronics Control Unit Installation

1. Refer to Figure 90-1. Turn battery switch off & pull-out associated circuit breaker.
2. Remove G428-1 wall assembly per § 90-220, if not previously accomplished.
3. Position 19206-2XX electronics control unit on G429-1 support assemblies. Align control unit, D428-16 brackets, and G429-10 support fastener holes and install MS27039C0805 screws. Verify security.
4. Connect cable assemblies to control unit. Verify security.
5. Install wall assembly per § 90-220.
6. Push-in associated circuit breaker & turn battery switch on. Perform appropriate post-installation function checks. Turn battery switch off.

G. Schematic

Refer to Figures 90-8 for F051-1 camera system installation wiring schematic.

90-140 F060 Intercom System Installation

Refer to Figure 90-1. The F060 intercom system installation includes a second floor switch.

Refer to § 90-70 for C823-16 audio control installation maintenance procedures.

90-150 F075-2 EFIS Installation

90-151 C831-12, -13, & -14 (GTN-XXX Series) GPS/NAV/COM Installation

A. Description

The Garmin GTN 600/700-series GPS for the Police version with Garmin G500H integrated display system is installed in the pilot-side console location.

B. Maintenance

Refer to § 97-56 for maintenance procedures.

90-152 G060-4 (Garmin G500H) Upper Console Assembly Installation

A. Opening Console

1. Remove Garmin GDU 620 display per § 95-72.
2. Remove C813-4 transceiver per § 90-60.
3. Remove perimeter screws securing instrument face to console.
4. Disconnect instrument pitot-static lines. Plug lines.
5. Remove screws securing console assembly to keel panels and hinge console aft.

B. Securing Console

1. Hinge console assembly forward and install screws securing console to keel panels.
2. Position instrument face in helicopter, remove plugs, and connect pitot-static lines.
3. Install perimeter screws securing face to console. Verify security.
4. Install C813-4 transceiver per § 90-60.
5. Install Garmin GDU 620 display per § 95-72.
6. Perform pitot-static system leak check per § 95-10.

90-155 F075-8 EFIS Installation

90-156 F817-9 (Garmin G500H) GDU 1060 Display (R66 Police) Installation

A. Description

The Garmin GDU 1060 Display is installed in the pilot-side console location for the Police Version F075-8 EFIS installation.

B. Maintenance

Refer to § 95-71 for maintenance procedures.

90-157 F818-11 (G070 Console) GTN 6XX-series GPS/NAV/COM Installation

A. Description

The Garmin GTN 6XX-series GPS/NAV/COM is installed in the G070 upper console location for the Police Version F075-8 EFIS installation.

B. Maintenance

Refer to § 97-15 for maintenance procedures.

90-158 G070-7 (8-Instrument, High) Upper Console Assembly

A. Removing Upper Console

1. Remove C813-5 transceiver per § 90-60.
2. Remove GTN 650Xi GPS/NAV/COM per § 97-15.
3. Remove perimeter screws securing instrument face to console.
4. Disconnect instrument pitot-static lines. Plug lines.
5. Remove hardware securing console assembly to keel panels and lower console. Disconnect airframe harnesses from console harnesses and remove console.

B. Installing Upper Console

1. Connect airframe harnesses to console harnesses and position upper console on lower console and keel panels. Install hardware; verify security.
2. Position instrument face in helicopter, remove plugs, and connect pitot-static lines.
3. Install perimeter screws securing face to console. Verify security.
4. Install GTN 650Xi GPS/NAV/COM per § 97-15.
5. Install C813-5 transceiver per § 90-60.
6. Perform pitot-static system leak check per § 95-10.

90-160 F079-1 PA/Siren System Installation

A. Speaker Removal

1. Refer to Figure 90-1. Turn battery switch off & pull-out associated circuit breaker.
2. Cut safety wire securing speaker cone to F644-1 bracket.
3. Unscrew cone and remove cone and speaker horn. Cut and discard remaining safety wire from inside of cone.
4. Slide back nipples and wire receptacles off of speaker electrical turrets.
5. Cut and discard speaker mounting bolt safety wire and remove bolts. Supporting speaker, remove two remaining mounting screws and hardware, and remove speaker.

B. Speaker Installation

1. Refer to Figure 90-1. Turn battery switch off & pull-out associated circuit breaker.
2. Remove cone and speaker horn from speaker. Position speaker with drain hole down in F644-1 bracket and install mounting hardware. Special torque two bolts to 60 in.-lb., install 0.032-inch diameter lockwire, and safety bolts together. Verify speaker security.
3. Slide wire receptacles on speaker electrical turrets. Slide nipples over connections.
4. Install 0.032-inch diameter lockwire inside of cone and prepare safety. Position speaker horn, drilled hole on top, on speaker and install and tighten cone. Thread safety through hole and safety cone to bracket. Verify security.

CAUTION

Hearing loss can result if personnel do not wear appropriate hearing protection when in close proximity to an operating PA/Siren.

5. Push-in associated circuit breaker & turn battery switch on. Wearing appropriate hearing protection, perform appropriate post-installation function checks. Turn battery switch off.

C. Amplifier Removal

1. Refer to Figure 90-1. Turn battery switch off & pull-out associated circuit breaker.
2. Open baggage compartment door. Remove aft left back rest per § 25-22.
3. Disconnect airframe wiring from amplifier at connectors. Remove hardware securing amplifier to G259-1 bulkhead and remove amplifier.

90-160 F079-1 PA/Siren System Installation (continued)

D. Amplifier Installation

1. Refer to Figure 90-1. Turn battery switch off & pull-out associated circuit breaker.
2. Open baggage compartment door; remove aft left back rest per § 25-22, if not previously accomplished.
3. Position amplifer on G259-1 bulkhead and install mounting hardware. Verify security. Close baggage compartment door.
4. Connect airframe wiring to amplifier at connectors. Verify security. Install aft left back rest per § 25-22.

CAUTION

Hearing loss can result if personnel do not wear appropriate hearing protection when in close proximity to an operating PA/ Siren.

5. Push-in associated circuit breaker. Turn battery switch on. Wearing appropriate hearing protection, perform appropriate post-installation function checks. Turn battery switch off.

E. Schematic

Refer to Figure 90-9 for F079-1 PA/Siren system installation wiring schematic.

90-170 F081 Searchlight Installation

CAUTION

The searchlight is very bright and can disorient other pilots or ground personnel at long distances.

CAUTION

The searchlight beam is very hot. Exposure to the beam at close range for more than a few seconds can result in burns.

A. D432-1 or -3 Gimbal Assembly Removal

1. Refer to Figure 90-1. Turn battery switch off & pull-out associated circuit breaker.
2. Disconnect large wiring connector from aft side of 024711-31 searchlight assembly.
3. Hinge aft right seat assembly forward. Disconnect searchlight wires connected to D432-2 or -4 gearmotor assembly at connectors.
4. Cut and discard ty-raps as required and remove spirap to separate gearmotor and searchlight harnesses. Pull gearmotor wiring thru hole in belly, toward searchlight.
5. Cut and discard safety wire securing mounting nut to adjacent screw.
6. Have a second person support the searchlight assembly, and prevent it from rotating. Remove nut, washer, searchlight, and spacer washer.

B. D432-1 or -3 Gimbal Assembly Installation

1. Refer to Figure 90-1. Turn battery switch off & pull-out associated circuit breaker.
2. Install spacer washer (shoulder facing up), 024711-31 searchlight assembly, flat washer, and nut.
3. Align the searchlight canister with the helicopter fore-to-aft axis. Have a second person support the searchlight assembly, and prevent it from rotating. Special torque nut to 20 ft-lb, install 0.032-inch diameter lockwire, and safety nut to adjacent screw. Verify security.
4. Connect large wiring connector to aft side of searchlight assembly.
5. Hinge aft right seat assembly forward. Route D432-2 or -4 gearmotor assembly wiring thru hole in belly and connect wiring at connectors.
6. Install spirap. Install one ty-rap near each end of spirap to secure harnesses together. Cinch ty-raps until snug without over-tightening and trim tips flush with heads. Hinge seat assembly forward.
7. Push-in associated circuit breaker & turn battery switch on. Perform appropriate post-installation function checks. Turn battery switch off.

C. Schematic

Refer to Figures 90-10 and 90-11 for F081 searchlight installation wiring schematic.

90-180 F082-21 Fairing Installation

Refer to § 90-80. The F082-21 fairing installation have (longer) fairing skins for extended landing gear.

Refer to § 32-40 for fairing assembly maintenance procedures.

90-190 G415-1 DVR Installation (Optional)

A. DVR Removal

1. Refer to Figure 90-1. Turn battery switch off & pull-out associated circuit breaker.
2. Disconnect cables from UDVP-PRO DVR connectors.
3. Remove hardware securing DVR to D856-5 brackets, and remove DVR.

B. DVR Installation

1. Refer to Figure 90-1. Turn battery switch off & pull-out associated circuit breaker.
2. Position UDVP-PRO DVR on D856-5 brackets and install hardware. Verify security.
3. Connect cables to DVR connectors.
4. Push-in associated circuit breaker & turn battery switch on. Perform appropriate post-installation function checks. Turn battery switch off.

C. Converter Removal

1. Refer to Figure 90-1. Turn battery switch off & pull-out associated circuit breaker.
2. Cut and discard ty-raps, as required, securing XM-DVR PRO converter output cable and input wiring to harness. Disconnect output cable from UDVP-PRO DVR. Disconnect input wiring from harness at connectors.
3. Remove F680-3 collective cover assembly. Remove hardware securing converter to F370-1 panel, and remove converter.

D. Converter Installation

1. Refer to Figure 90-1. Turn battery switch off & pull-out associated circuit breaker.
2. Remove F680-3 collective cover assembly, if not previously accomplished.
3. Position XM-DVR PRO converter on F370-1 panel and install hardware. Verify security. Install F680-3 collective cover assembly.
4. Connect converter input wiring to harness at connectors. Connect output cable to DVR. Install ty-raps as required to secure wiring and cable to harness. Cinch ty-raps until snug without over-tightening and trim tips flush with heads.
5. Push-in associated circuit breaker & turn battery switch on. Perform appropriate post-installation function checks. Turn battery switch off.

E. Schematic

Refer to Figure 90-12 and 90-13 for G415-1 DVR installation wiring schematic.

90-200 G416 Monitor Installation

A. Description

The G416-1 monitor installation (earlier helicopters) hinges forward and down for stowing. The G416-4 and G416-5 monitor installation hinges forward at the right edge to stow alongside the console.

B. Schematic

Refer to Figure 90-12 for G416-1 monitor installation wiring schematic.

Refer to Figure 90-13 for G416-4 monitor installation wiring schematic.

Refer to Figure 90-14 for G416-5 monitor installation wiring schematic.

C. Removal

G416-1 Monitor Installation

1. Turn battery switch off and pull-out MONITOR (2 amp) circuit breaker at panel.
2. Disconnect cables from V-R1041-RH monitor.
3. Remove hardware securing MS21919WDG8 clamp to monitor.
4. Support monitor. Remove A483-1 knob with associated hardware, and DK-225 knob with associated hardware, securing monitor to D409-8 pivot assembly. Remove monitor.
5. Remove screws securing D763-3 visor assembly to monitor.

G416-4 Monitor Installation

1. Turn battery switch off and pull-out MONITOR (2 amp) circuit breaker at panel.
2. Disconnect G458 harness assembly cables from DVI 10LDB_RH monitor.
3. Remove screws securing monitor to G417-1 pivot assembly and G417-4 tray assembly and remove monitor.

G416-5 Monitor Installation

1. Turn battery switch off and pull-out MONITOR (2 amp) circuit breaker at panel.
2. Disconnect G458 harness assembly cables from BHB12HDR15 monitor.
3. Remove screws securing monitor to G417-5 pivot assembly and G417-7 tray assembly and remove monitor.

90-200 G416 Monitor Installation (continued)

D. Installation

G416-1 Monitor Installation

1. Install screws securing D763-3 visor assembly to V-R1041-RH monitor. Verify security.
2. Turn battery switch off and pull-out MONITOR (2 amp) circuit breaker at panel. Position monitor on D409-8 pivot assembly; install A483-1 knob with associated hardware, and DK-225 knob with associated hardware, securing monitor to pivot assembly. Adjust angle as desired. Verify security.
3. Install hardware securing MS21919WDG8 clamp to monitor.
4. Connect cables to monitor.
5. Push in (2 amp) circuit breaker at panel. Turn battery & avionics switches on. Perform appropriate post-installation function checks. Turn battery & avionics switches off.

G416-4 Monitor Installation

1. Turn battery switch off and pull-out MONITOR (2 amp) circuit breaker at panel.
2. Position DVI 10LDB_RH monitor on G417-1 pivot assembly and G417-4 tray assembly and install screws. Verify security.
3. Connect G458 harness assembly cables to monitor.
4. Push in (2 amp) circuit breaker at panel. Turn battery & avionics switches on. Perform appropriate post-installation function checks. Turn battery & avionics switches off.

G416-5 Monitor Installation

1. Turn battery switch off and pull-out MONITOR (2 amp) circuit breaker at panel.
2. Position BHB12HDR15 monitor on G417-5 pivot assembly and G417-7 tray assembly and install screws. Verify security.
3. Connect G458 harness assembly cables to monitor.
4. Push in (2 amp) circuit breaker at panel. Turn battery & avionics switches on. Perform appropriate post-installation function checks. Turn battery & avionics switches off.

E. Scheduled Maintenance and Inspections

On condition.

F. Special Maintenance and Inspections

Contact Marshall Electronics or Boland Communications Technical Support for assistance.

90-210 G423-1 Aux Electrical System Installation

A. Schematic

Refer to § 90-280 for aux electrical system schematics.

90-220 G425-1 Wall Installation

A. Removal

1. Refer to Figure 90-1. Open baggage compartment door. Release quarter-turn slot and wing head fasteners securing G428-1 wall assembly to G238-1 bulkhead and G428-2 angles. Carefully remove wall.

B. Installation

1. Refer to Figure 90-1. Open baggage compartment door. Verify no foreign objects aft of wall mounting points. Verify proper installation and security of equipment.
2. Align G428-1 wall assembly quarter-turn slot and wing head fasteners with receptacles on G238-1 bulkhead and G428-2 angles, and lock fasteners. Verify security. Close baggage compartment door.

90-230 G437-1 Lojack Installation

A. Display Removal

1. Refer to Figure 90-1. Turn battery switch off & pull-out associated circuit breaker.
2. Disconnect cable from 4106-0006-00 display.
3. Remove screws securing D600-3 visor assembly and display to D436-6 support. Remove visor and display.

B. Display Installation

1. Refer to Figure 90-1. Turn battery switch off & pull-out associated circuit breaker.
2. Connect cable to 4106-0006-00 display.
3. Position D600-3 visor assembly and display on D436-6 support and install screws. Verify security.
4. Push-in associated circuit breaker & turn battery switch on. Perform appropriate post-installation function checks. Turn battery switch off.

C. Receiver Removal

1. Refer to Figure 90-1. Turn battery switch off & pull-out associated circuit breaker.
2. Remove G428-1 wall assembly per § 90-220.
3. Remove screws securing two cable backshells to 4107-0003-10 receiver. Disconnect all cables from receiver.
4. Remove screws securing receiver to G429-3 and G429-4 support assemblies, and remove receiver.

D. Receiver Installation

1. Refer to Figure 90-1. Turn battery switch off & pull-out associated circuit breaker.
2. Remove G428-1 wall assembly per Section 90-220, if not previously accomplished.
3. Position 4107-0003-10 receiver on G429-3 and G429-4 support assemblies and install screws. Verify security.
4. Connect all cables to receiver. Install screws securing two cable backshells to receiver. Verify security.
5. Install G428-1 wall assembly per § 90-220.
6. Push-in associated circuit breaker & turn battery switch on. Perform appropriate post-installation function checks. Turn battery switch off.

E. Schematic

Refer to Figure 90-15 for G437-1 Lojack installation wiring schematic.

90-240 G460 Audio Control Installation

A. Description

Two Technisonic A711L-series audio control panels are installed. The observer's audio control panel is installed in the main avionics stack, and the pilot's panel is installed in the pilot's side console. (Earlier police version helicopters had a dual audio panel located in the avionics stack; refer to § 90-140).

B. Schematic

Refer to Figure 90-17 for G460 audio control installation wiring schematic.

C. Removal

1. Turn battery switch off and pull out ICS (3 amp) circuit breaker at panel.
2. Loosen radio key securing Technisonic A711L-series audio control to avionics tray.
3. Carefully unplug/remove audio control from tray.

D. Installation

1. Turn battery switch off and pull out ICS (3 amp) circuit breaker at panel.
2. Carefully plug-in/install Technisonic A711L-series audio control in appropriate location in avionics tray.
3. Tighten radio key securing audio control to tray. Verify equipment security.
4. Push in ICS (3 amp) circuit breakers at panel. Turn battery & avionics switches on.
5. Perform appropriate functional checks per Technisonic Industries Limited Installation and Operating Instructions. Turn battery & avionics switches off.

E. Scheduled Maintenance and Inspections

Refer to Technisonic Industries Limited Installation and Operating Instructions.

F. Special Maintenance and Inspections

1. Turn battery & avionics switches off. Open circuit breaker panel and upper or pilot's side console.
2. Inspect condition of and verify no obvious damage to audio control, radio tray, copper bus bars, circuit breaker, and wiring. Verify no loose, chafed, or broken wires or terminals. Verify no evidence of arcing. Verify equipment security.
3. Secure circuit breaker panel and upper or pilot's side console. Perform ground checks per Part D steps 4 and 5.

90-250 G608 GPS Mapping System Installation

A. Description

The GPS mapping computer is installed in the main baggage compartment behind the interior wall and allows an overhead view of the helicopter's area of operation to be displayed on the LCD monitor. The computer contains a database of streets, landmarks, and topography enabling direct navigation to street addresses and other points on the ground. The computer is accessed using a keyboard below the LCD monitor. An optional inertial monitoring unit can interface with the computer to keep the camera and/or searchlight trained on a fixed ground location while the helicopter maneuvers.

B. Schematic

Refer to Figures 90-18 for G608 GPS mapping and MDT installation wiring schematic.

C. Removal

Viewsync3D Computer

1. Turn battery switch off and pull out VIEWSYNC (5 amp) circuit breaker at panel.
2. Remove G428-1 wall assembly per § 90-220.
3. Disconnect cables from Viewsync3D computer.
4. Remove hardware securing computer to isolator mounting tray and remove computer.

UC-5300/6000 Computer

1. Turn battery switch off and pull out GPS MAP (5 amp) circuit breaker at panel.
2. Remove G428-1 wall assembly per § 90-220.
3. Disconnect cables from UC-5300/6000 computer.
4. Remove hardware securing computer to isolator mounting tray and remove computer.

IMU Sensor (if installed)

1. Turn battery switch off and pull out GPS MAP (5 amp) circuit breaker at panel.
2. Remove F445-1 and F680-3 cover assemblies and hinge forward left seat forward.
3. Remove hardware securing G702-9 cover assembly to seat assembly.
4. Disconnect cables from IMU Sensor.
5. Remove hardware securing IMU Sensor to G429-15 support assembly and remove IMU Sensor.

90-250 G608 GPS Mapping System Installation (continued)

D. Installation

Viewsync3D Computer

1. Turn battery switch off and pull out VIEWSYNC (5 amp) circuit breaker at panel.
2. Position Viewsync3D computer on isolator mounting tray and install hardware. Verify security.
3. Connect cables to computer.
4. Install G428-1 wall assembly per MM § 90-220.
5. Push in VIEWSYNC (5 amp) circuit breakers at panel. Turn battery & avionics switches on.
6. Perform appropriate functional checks per Aerocomputers Airborne Systems UC-5300 Operating Instructions. Turn battery & avionics switches off.

UC-5300/6000 Computer

1. Turn battery switch off and pull out GPS MAP (5 amp) circuit breaker at panel.
2. Position UC-5300/6000 computer on isolator mounting tray and install hardware. Verify security.
3. Connect cables to computer.
4. Install G428-1 wall assembly per MM § 90-220.
5. Push in GPS MAP (5 amp) circuit breakers at panel. Turn battery & avionics switches on.
6. Perform appropriate functional checks per Aerocomputers Airborne Systems UC-5300/6000 Operating Instructions. Turn battery & avionics switches off.

IMU Sensor (if installed)

1. Turn battery switch off and pull out GPS MAP (5 amp) circuit breaker at panel.
2. Position IMU Sensor on G429-15 support assembly and install hardware. Verify security.
3. Connect cables to IMU Sensor.
4. Install hardware securing G702-9 cover assembly to seat assembly.
5. Install F445-1 and F680-3 cover assemblies and hinge forward left seat aft.
6. Push in GPS MAP (5 amp) circuit breakers at panel. Turn battery & avionics switches on.
7. Perform appropriate functional checks per Aerocomputers Airborne Systems UC-5300 Operating Instructions. Turn battery & avionics switches off.

90-250 G608 GPS Mapping System Installation (continued)

E. Antenna

Refer to § 6-80 for antenna locations & R66 Illustrated Parts Catalog (IPC) Chapter 6.

NOTE
Antenna installation depends on optional equipment installed.

Removal

1. Turn battery switch off and pull out GPS MAP (5 amp) circuit breaker at panel.
2. Remove hardware securing G796-1 duct assembly to cabin and remove duct.
3. Disconnect antenna cable from antenna. Remove screws securing antenna to cabin and remove antenna.

Installation

1. Turn battery switch off and pull out GPS MAP (5 amp) circuit breaker at panel.
2. Position antenna on cabin and install hardware. Verify security. Connect antenna cable.
3. Position G796-1 duct assembly on cabin and install hardware. Verify security.
4. Perform ground checks per Part D IMU Sensor steps 6 and 7.

F. Scheduled Maintenance and Inspections

On condition.

G. Special Maintenance and Inspections

Contact Aerocomputers Airborne Systems Technical Support for assistance.

90-260 G685 Aux Strobe Light Installation

Refer to § 33-11 for maintenance procedures.

90-270 G749-1 Console Installation

A. Removal

1. Refer to Figure 90-1. Unlatch G750-1 tray and remove contents from G749-2 console assembly. Latch tray.
2. Remove screws securing console assembly to F377-1 support assembly, and remove console.

B. Installation

1. Refer to Figure 90-1. Unlatch G750-1 tray and remove contents from G749-2 console assembly. Latch tray.
2. Position console on F377-1 support assembly and install screws. Verify security.

Intentionally Blank

90-280 Wiring Schematics

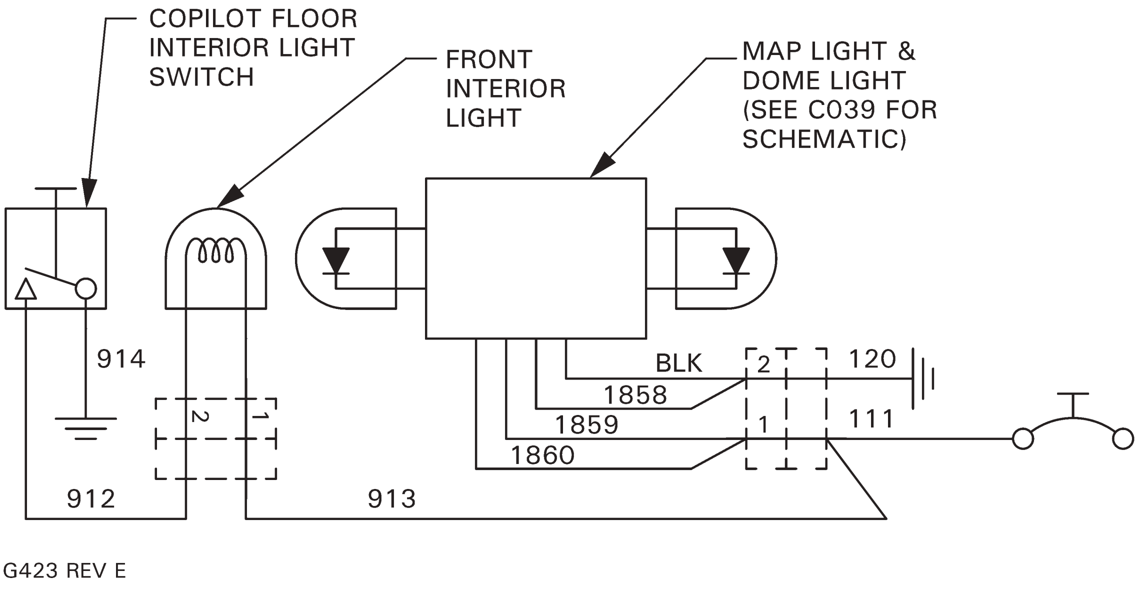

FIGURE 90-2 CO60-3 INTERIOR LIGHT INSTALLATION WIRING SCHEMATIC

Intentionally Blank

90-280 Wiring Schematics (continued)

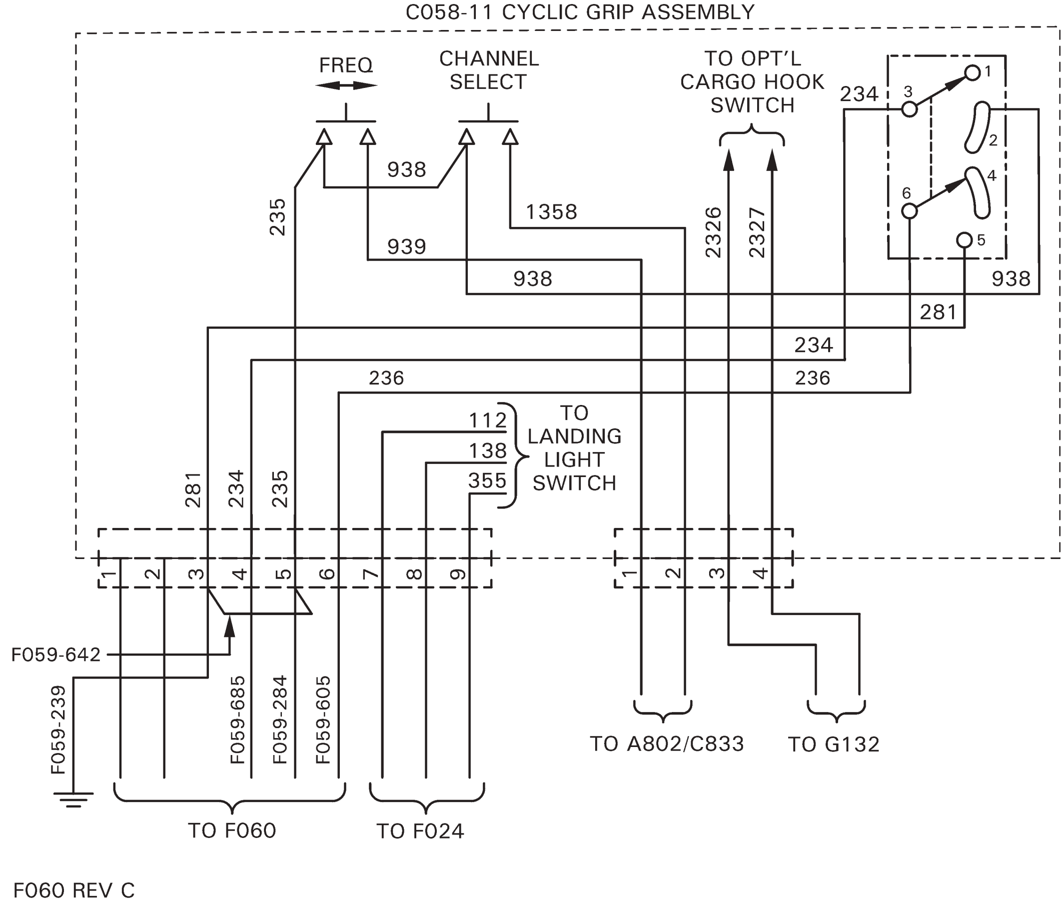

FIGURE 90-3 C058-11 GRIP ASSEMBLY WIRING SCHEMATIC

Intentionally Blank

90-280 Wiring Schematics (continued)

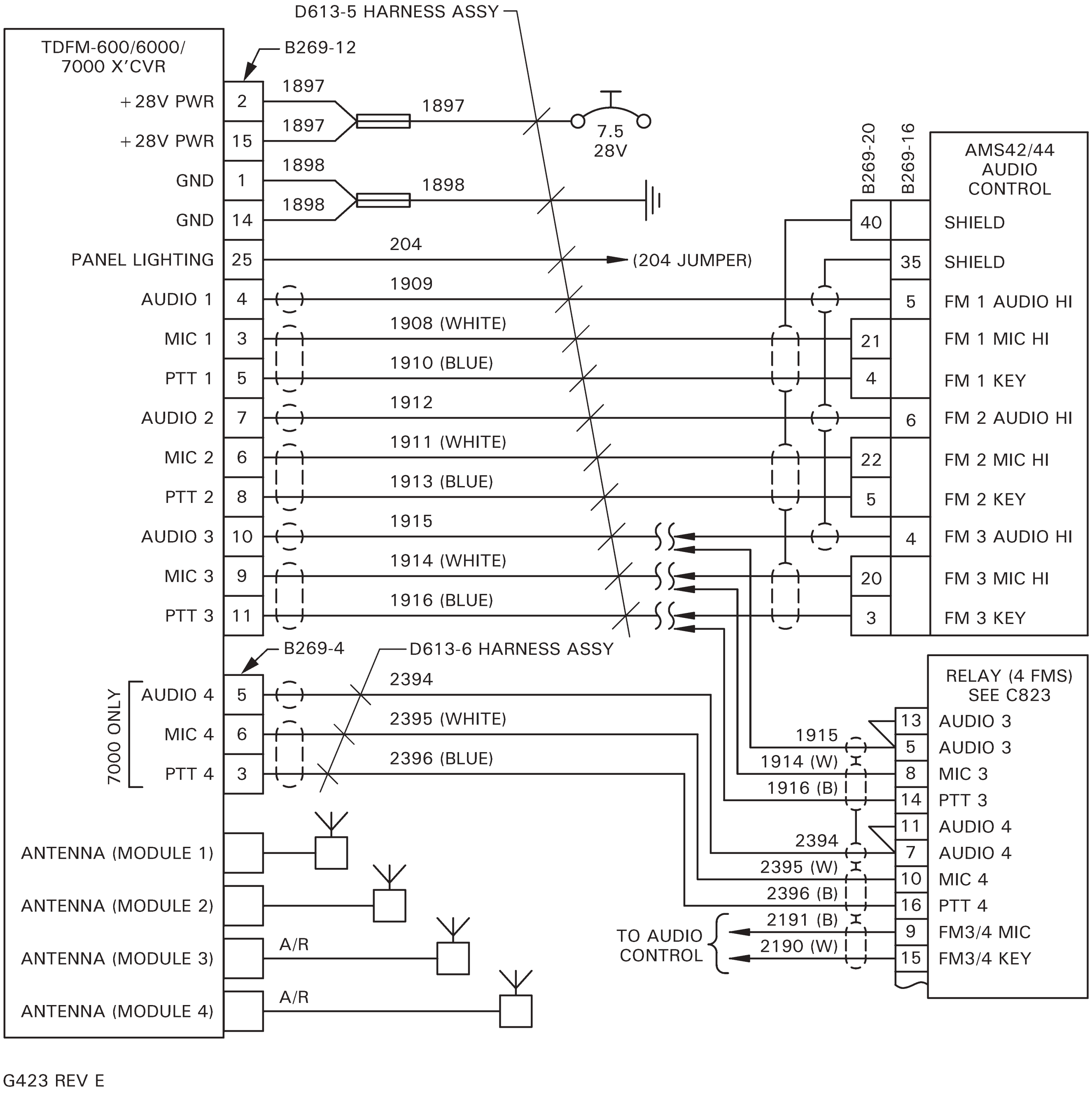

FIGURE 90-4 C813-2 TRANSCEIVER INSTALLATION WIRING SCHEMATIC

Intentionally Blank

90-280 Wiring Schematics (continued)

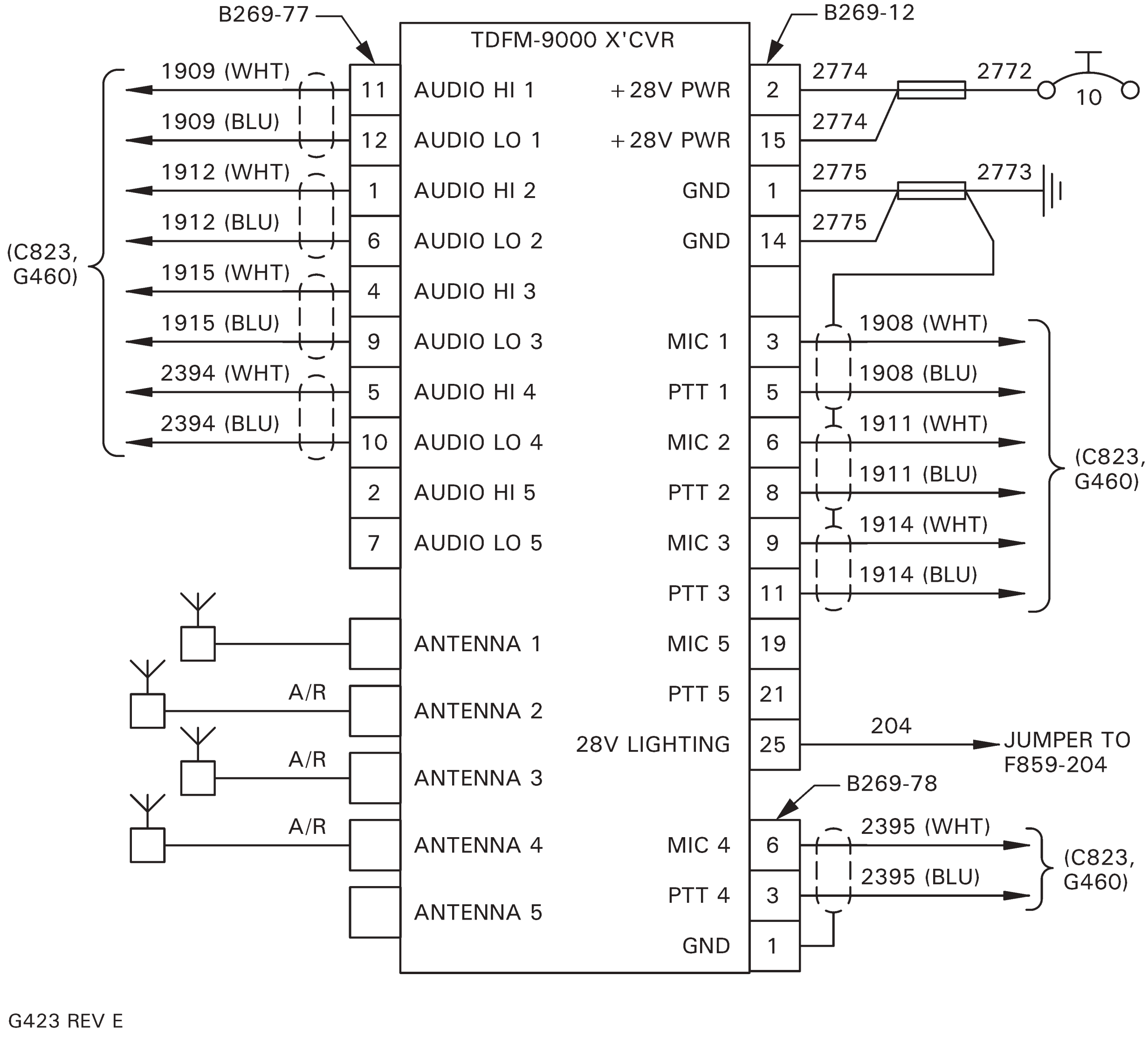

FIGURE 90-5 C813-4 TRANSCEIVER INSTALLATION WIRING SCHEMATIC

Intentionally Blank

90-280 Wiring Schematics (continued)

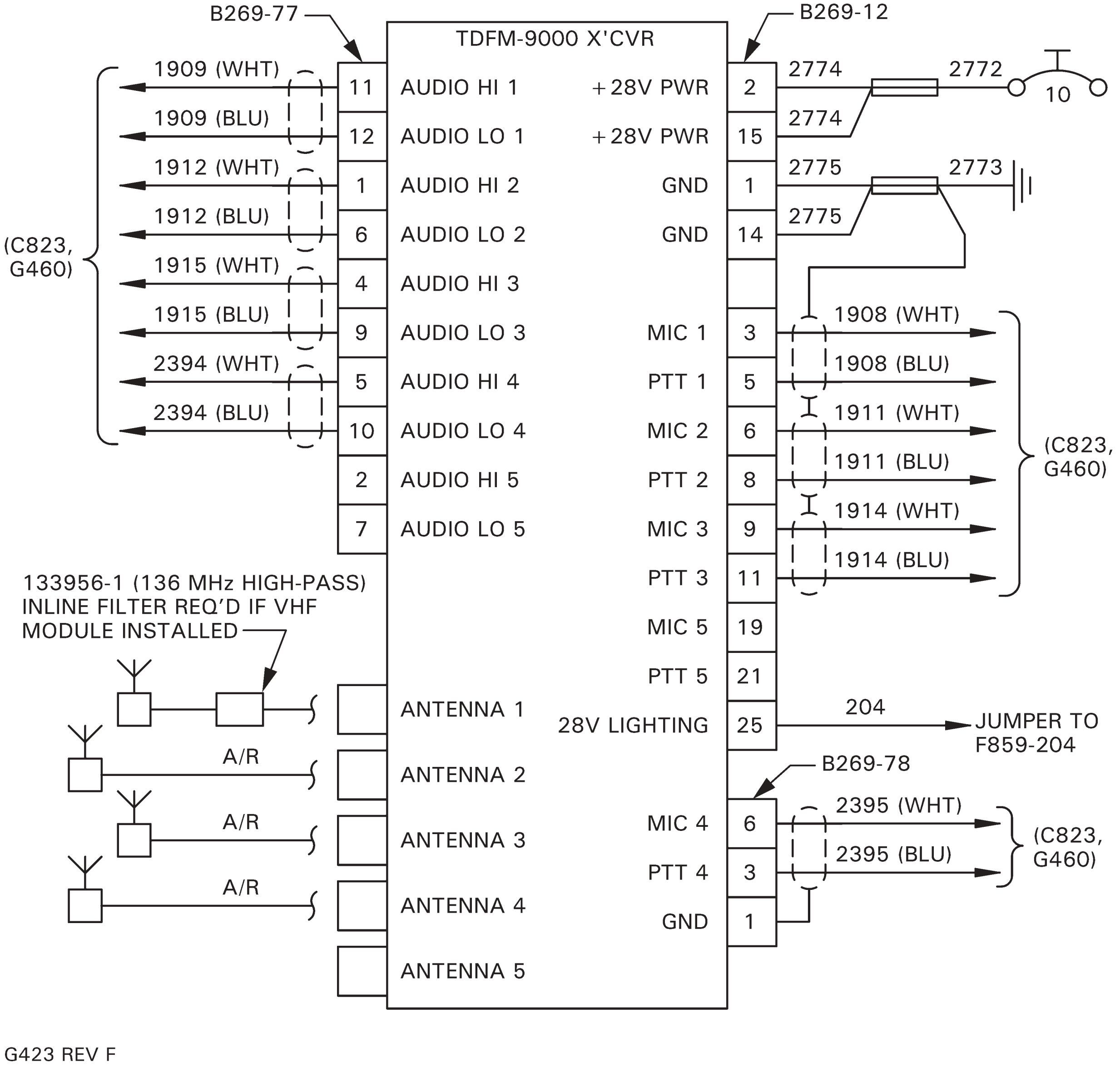

FIGURE 90-6 C813-5 TRANSCEIVER INSTALLATION WIRING SCHEMATIC

Intentionally Blank

90-280 Wiring Schematics (continued)

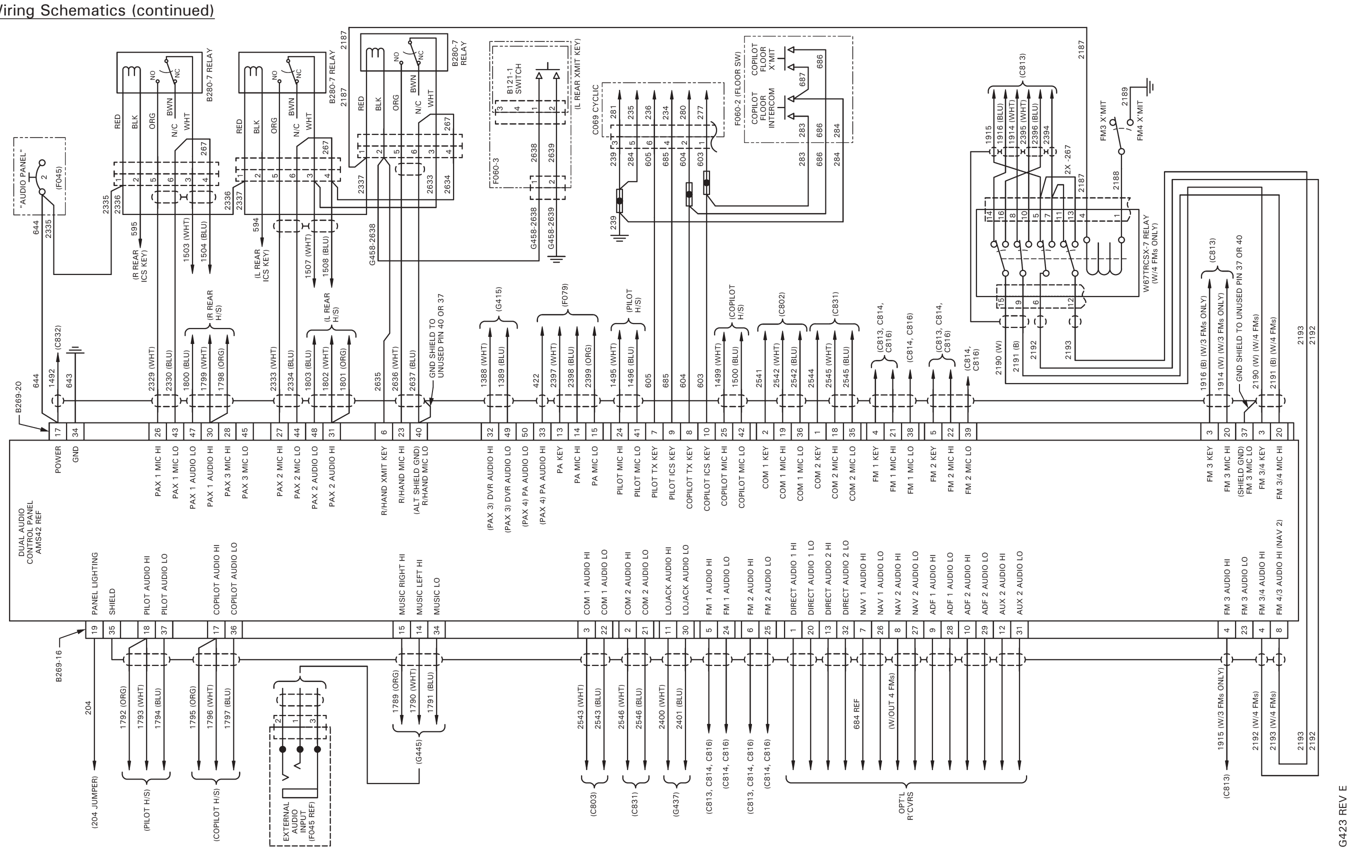

FIGURE 90-7 C823-16 AUDIO CONTROL INSTALLATION WIRING SCHEMATIC

Intentionally Blank

90-280 Wiring Schematics (continued)

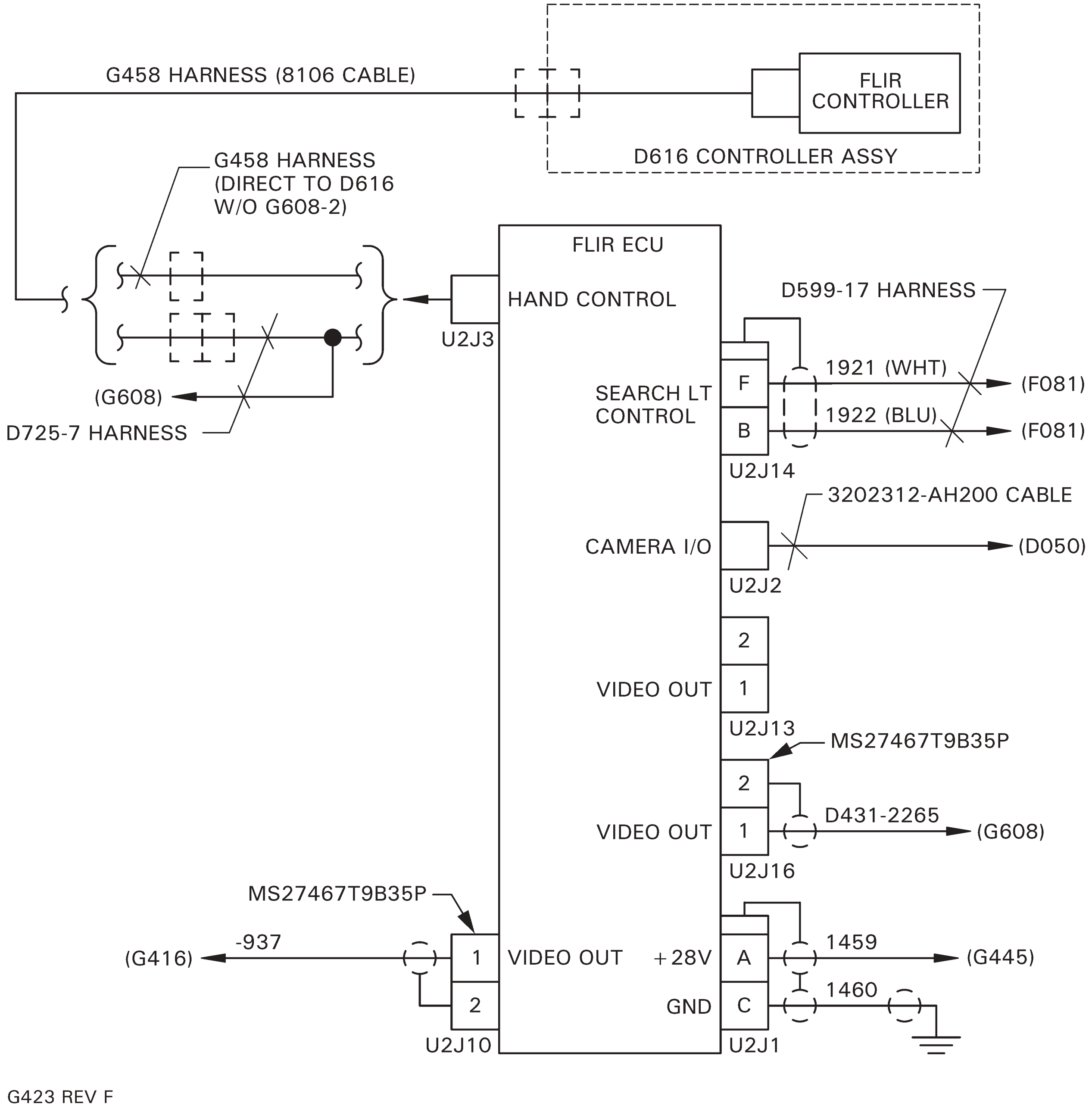

FIGURE 90-8 F051-1 CAMERA SYSTEM INSTALLATION WIRING SCHEMATIC

Intentionally Blank

90-280 Wiring Schematics (continued)

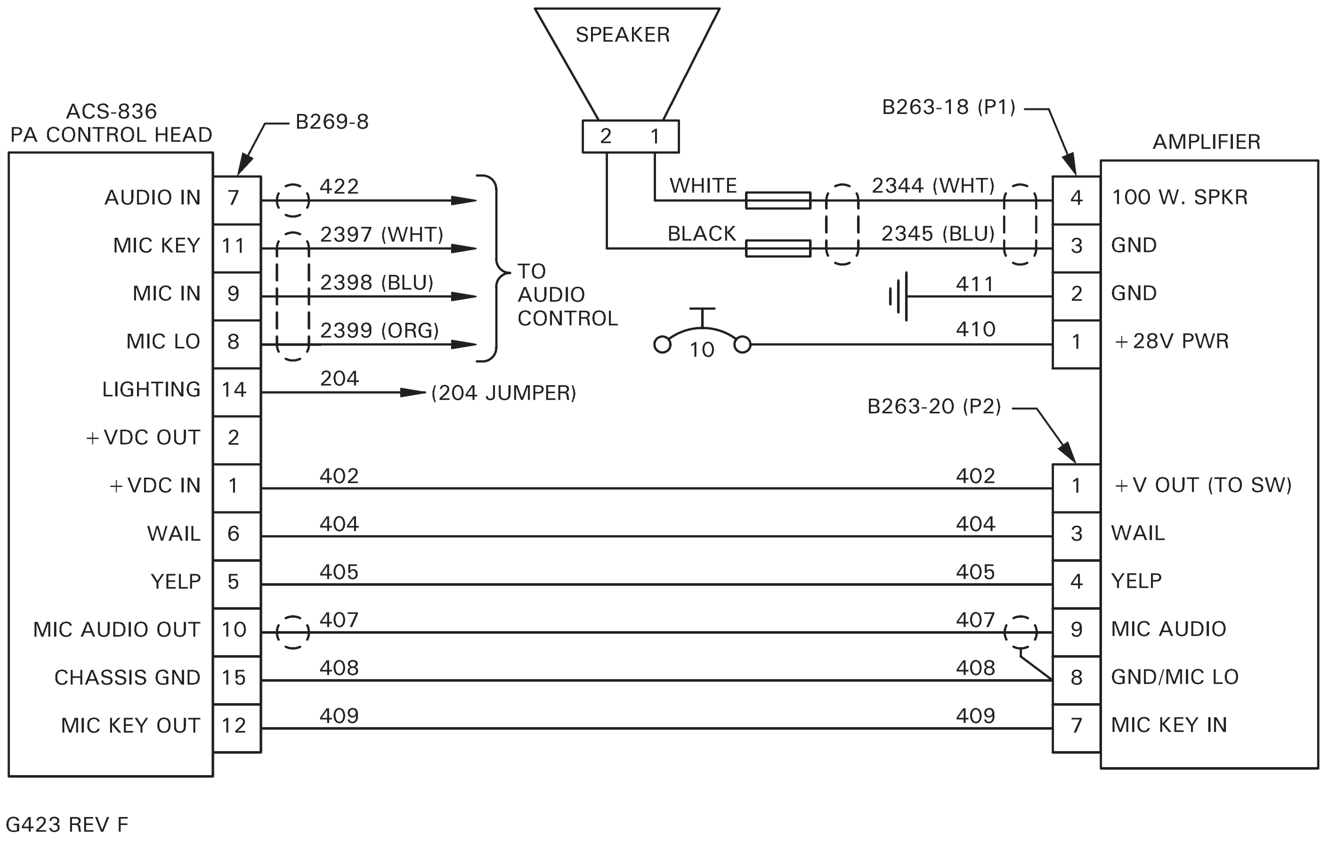

FIGURE 90-9 F079-1 PA/SIREN SYSTEM INSTALLATION WIRING SCHEMATIC

Intentionally Blank

90-280 Wiring Schematics (continued)

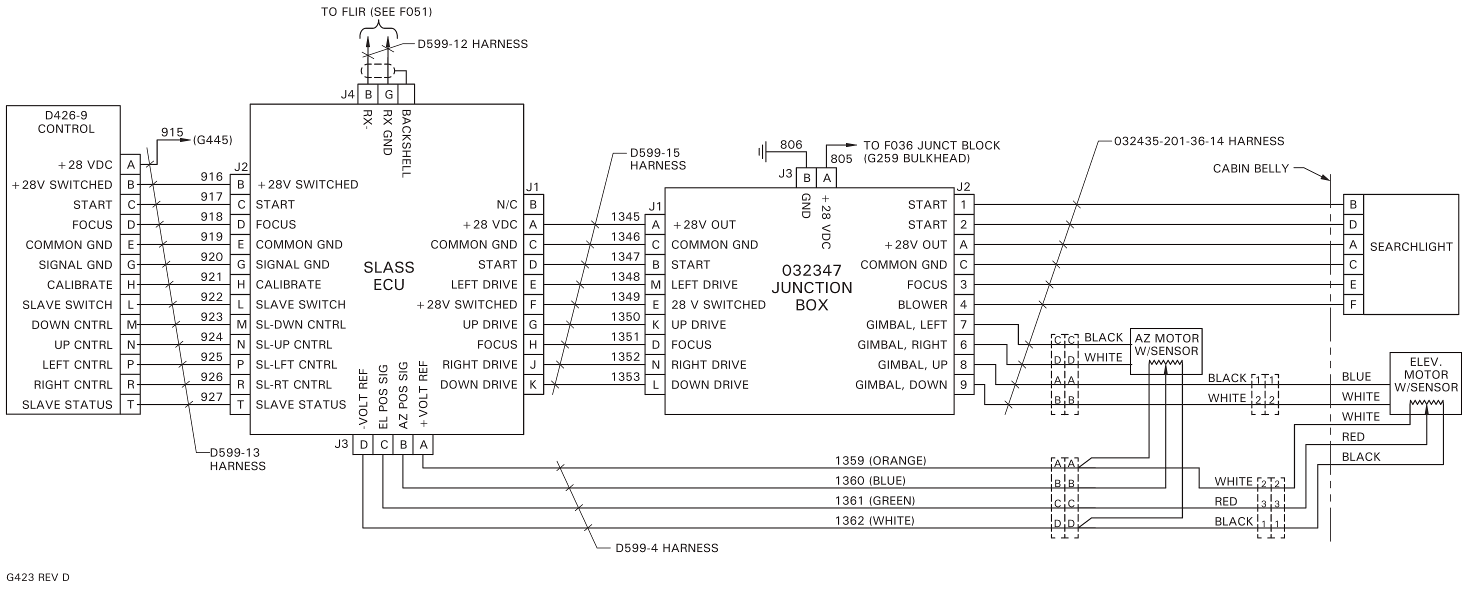

FIGURE 90-10 F081-1 SEARCHLIGHT INSTALLATION WIRING SCHEMATIC

90-280 Wiring Schematics (continued)

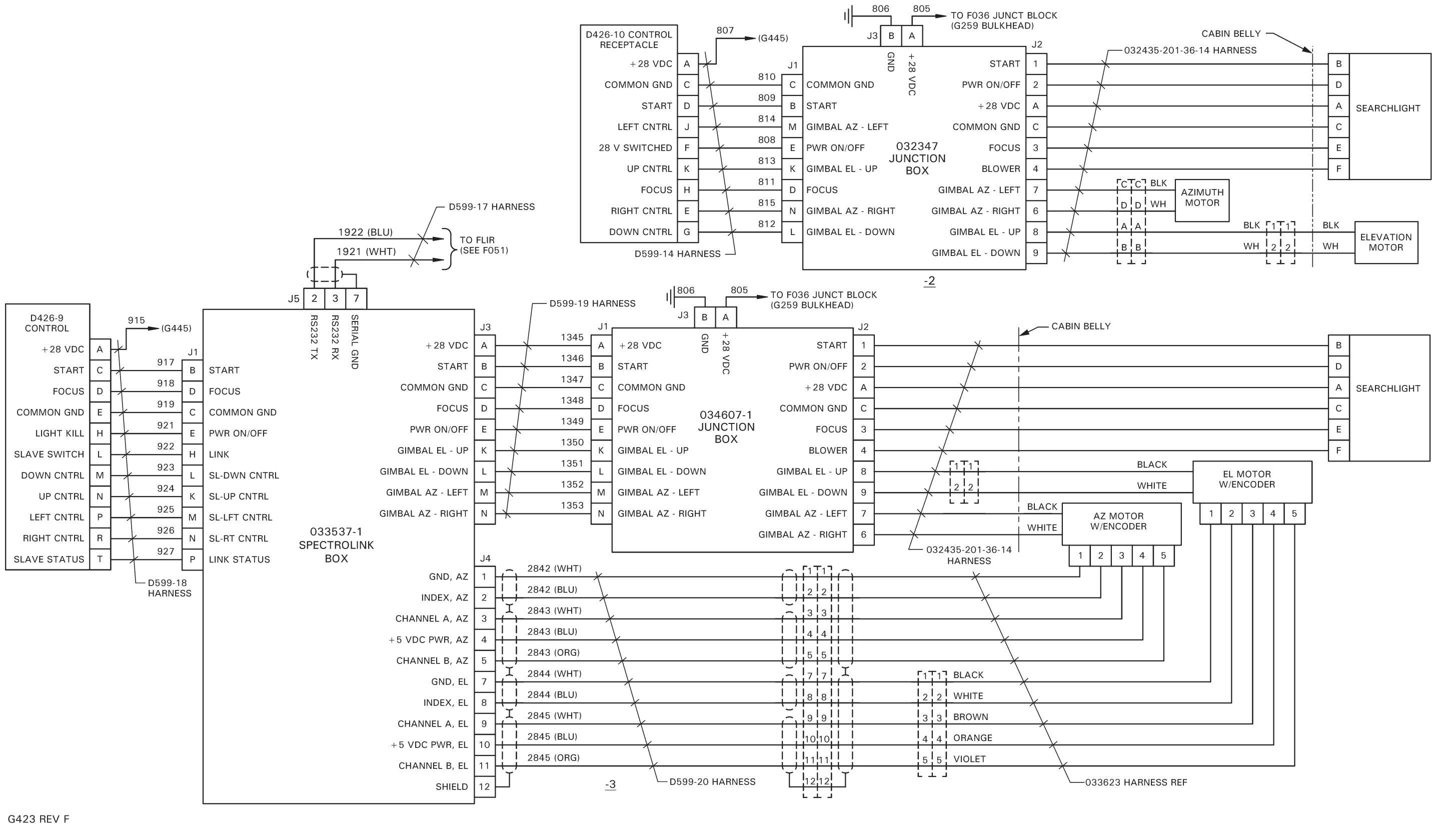

FIGURE 90-11 F081-2 AND F081-3 SEARCHLIGHT INSTALLATION WIRING SCHEMATIC

90-280 Wiring Schematics (continued)

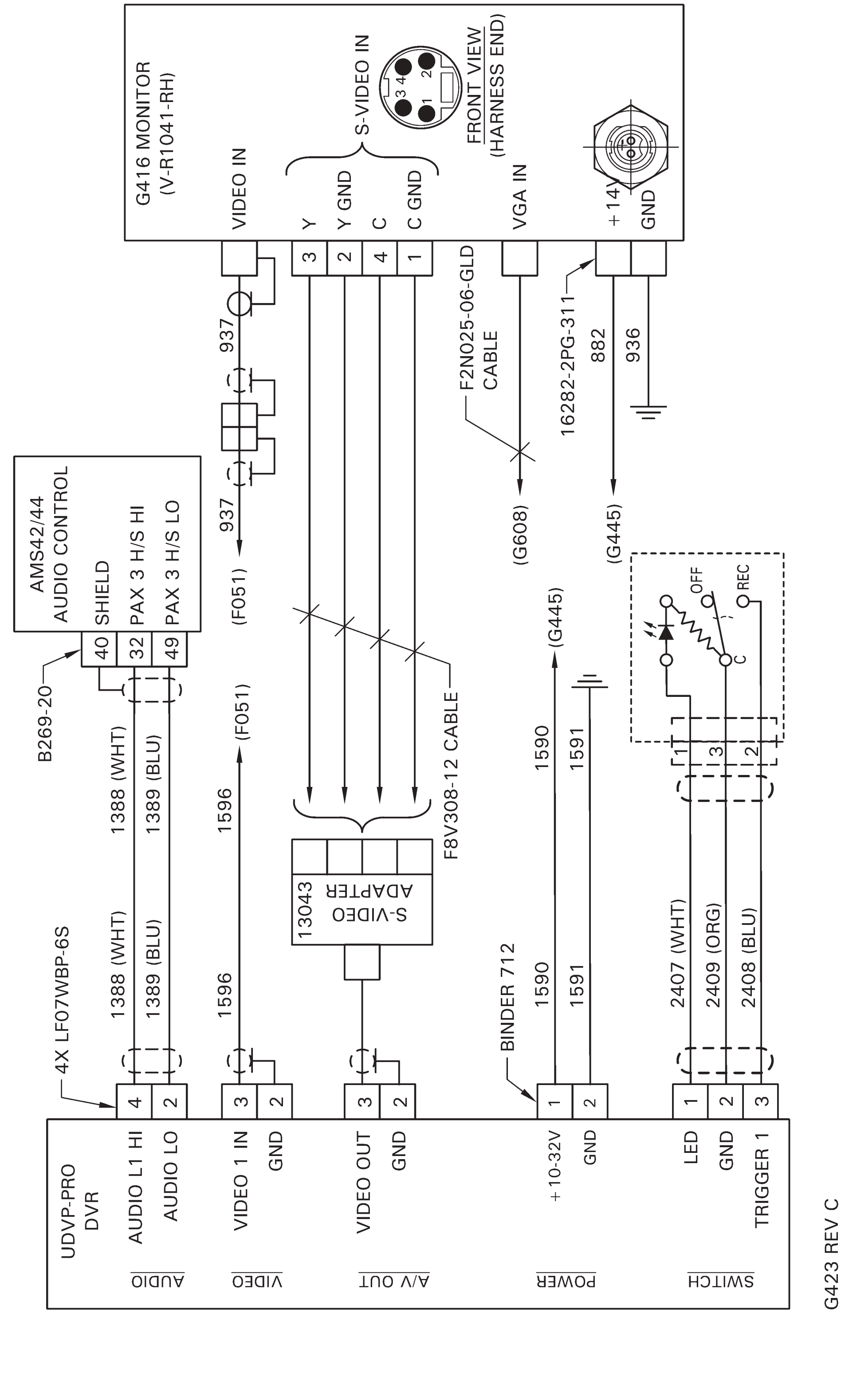

FIGURE 90-12 G415-1 AND G416-1 MONITOR INSTALLATION WIRING SCHEMATIC

Intentionally Blank

90-280 Wiring Schematics (continued)

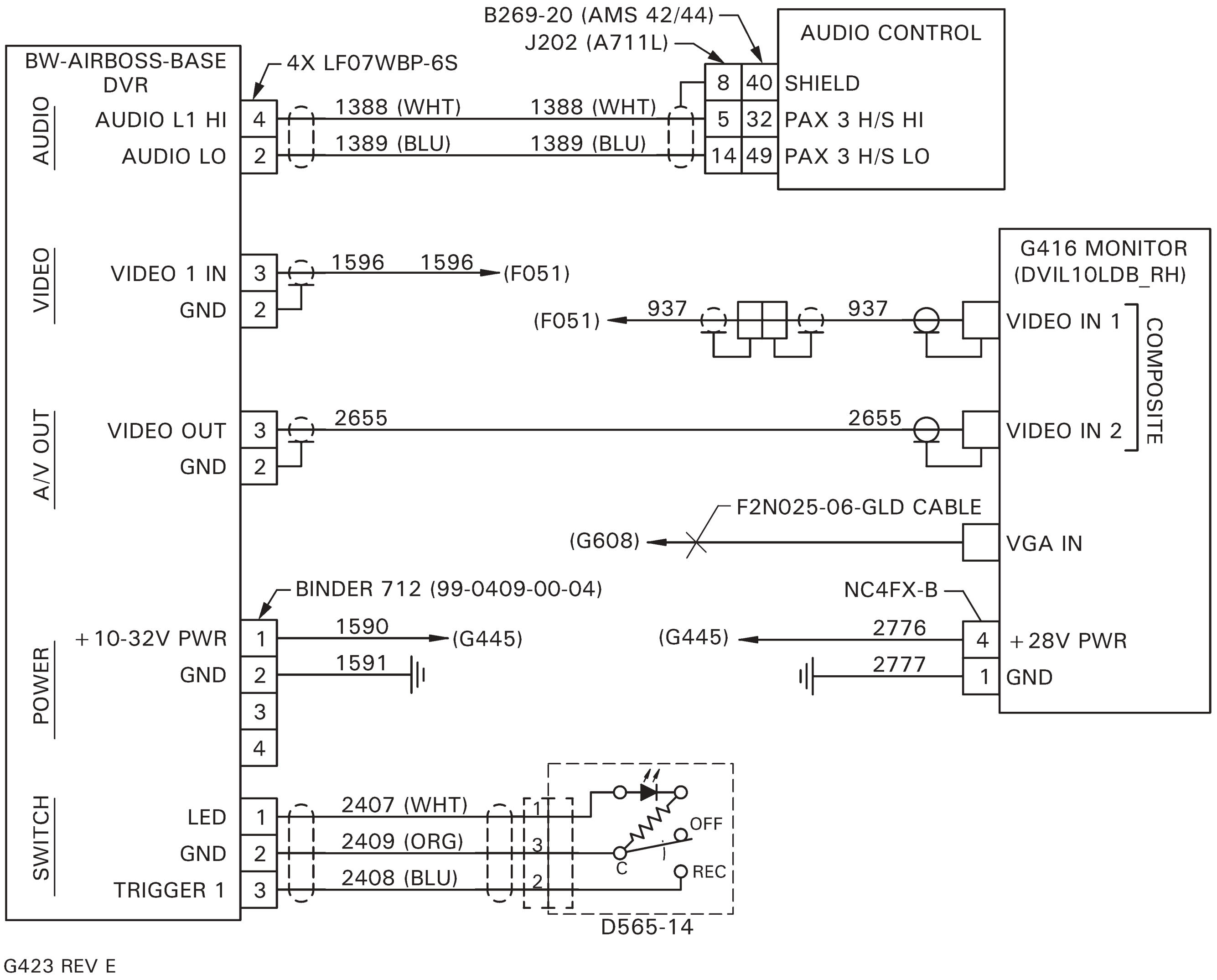

FIGURE 90-13 G415-1 AND G416-4 AND MONITOR INSTALLATION WIRING SCHEMATIC

Intentionally Blank

90-280 Wiring Schematics (continued)

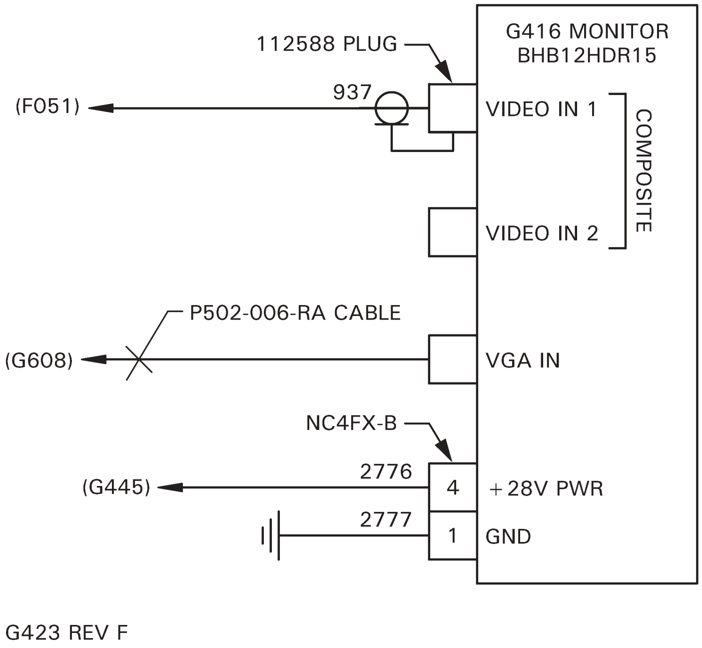

FIGURE 90-14 G416-5 MONITOR INSTALLATION WIRING SCHEMATIC

Intentionally Blank

90-280 Wiring Schematics (continued)

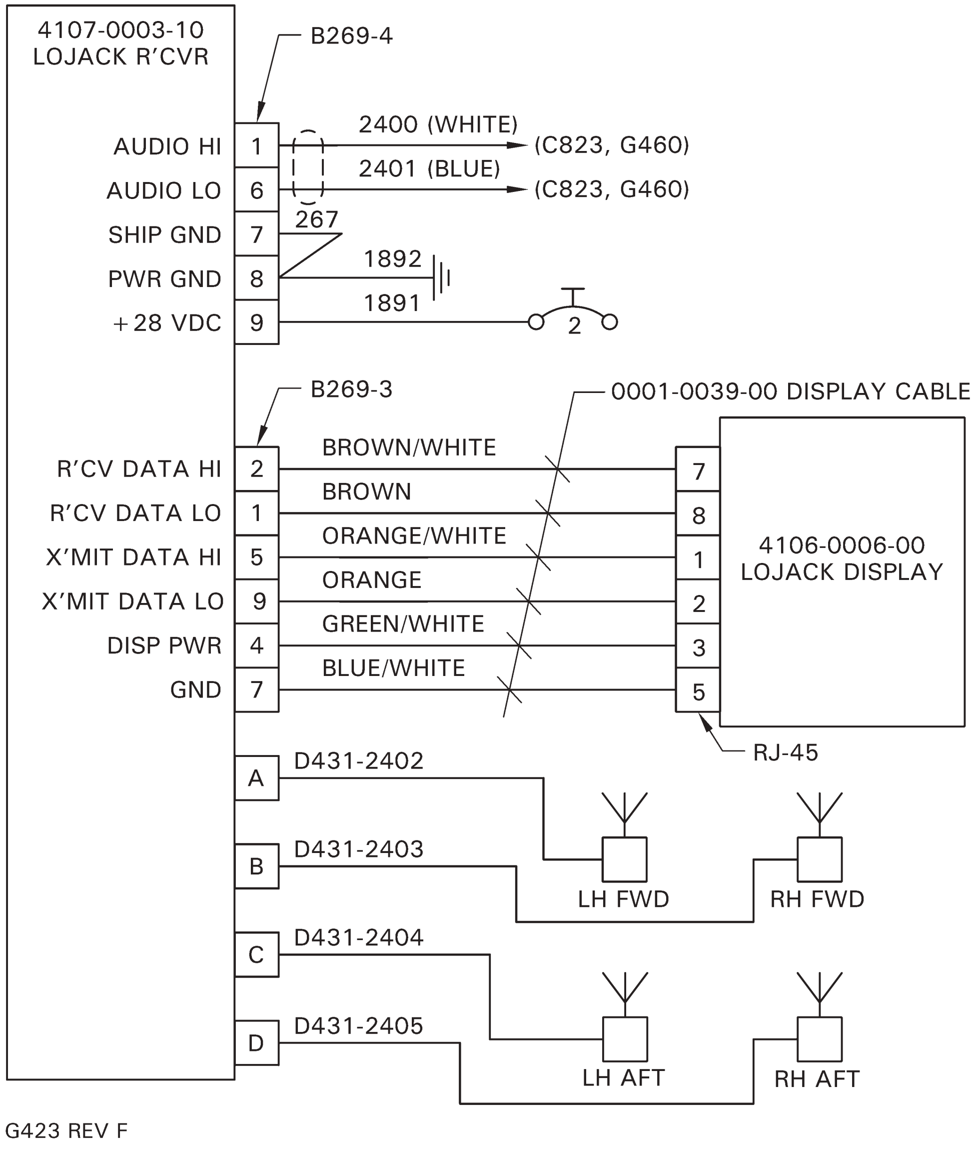

FIGURE 90-15 G437-1 LOJACK INSTALLATION WIRING SCHEMATIC

Intentionally Blank

90-280 Wiring Schematics (continued)

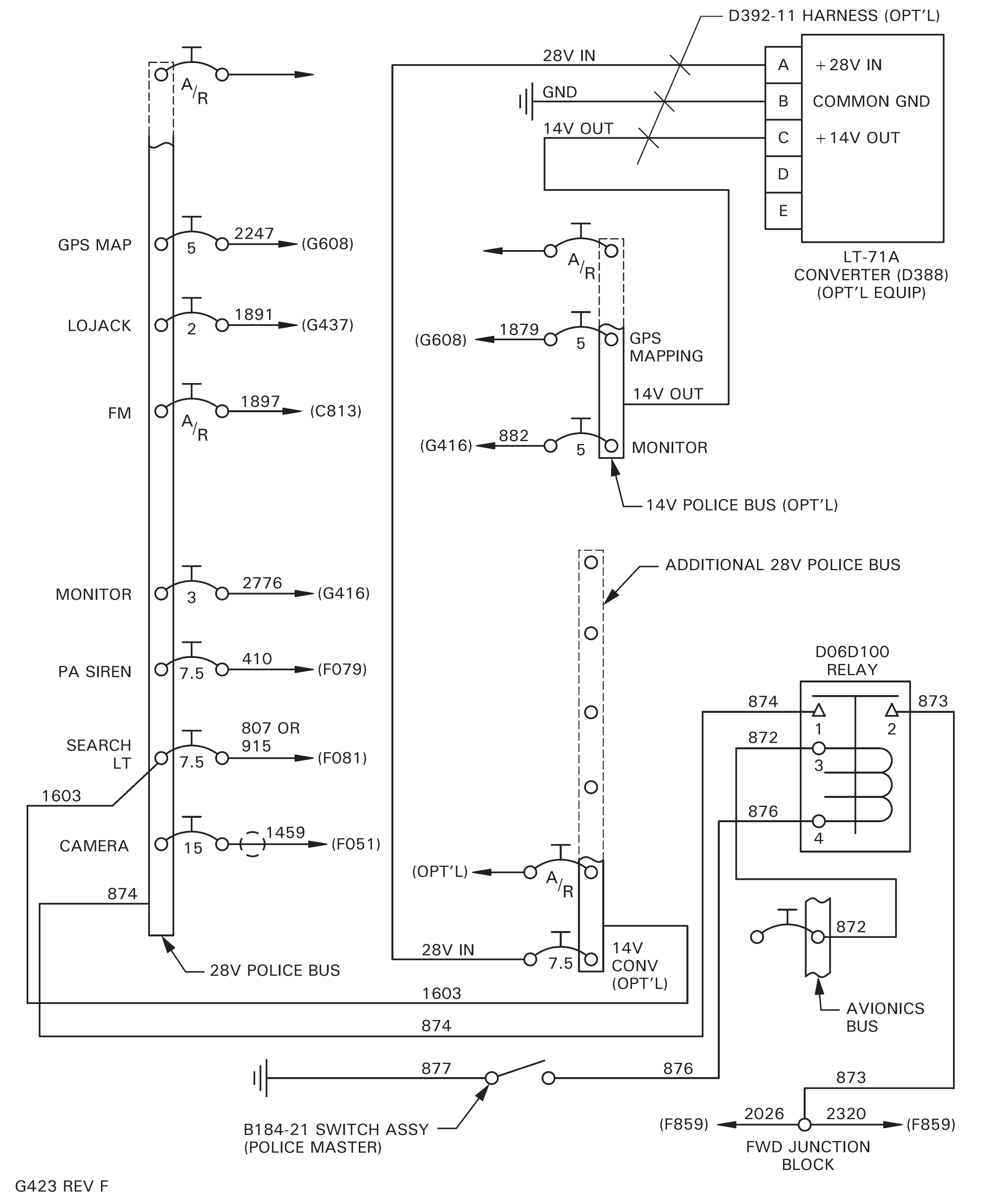

FIGURE 90-16 G445 AND G467 AUX ELECTRICAL AND CB WIRING INSTALLATION WIRING SCHEMATIC

Intentionally Blank

90-280 Wiring Schematics (continued)

FIGURE 90-17 C460-1 AND C460-2 AUDIO CONTROL INSTALLATION WIRING SCHEMATIC

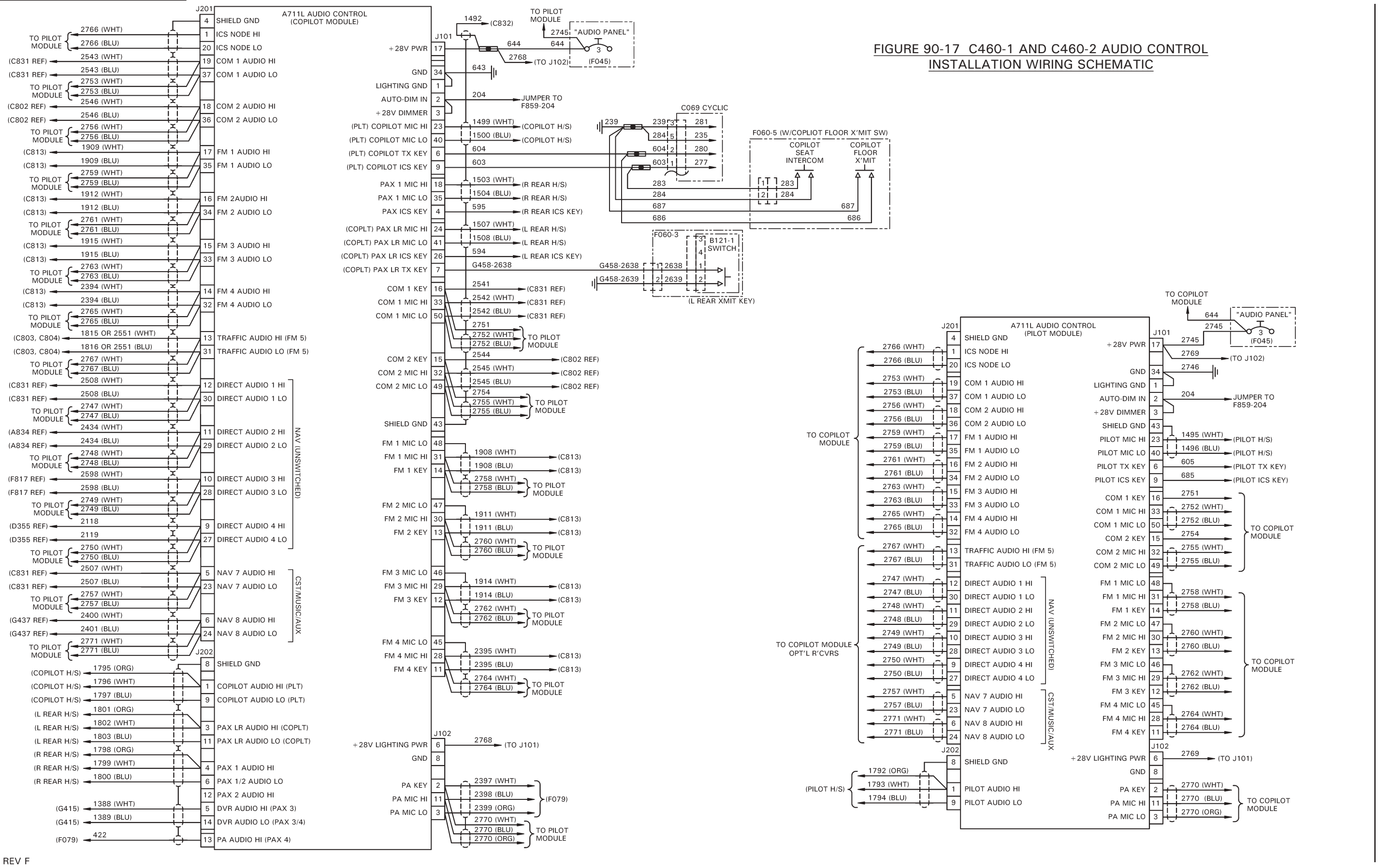

90-280 Wiring Schematics (continued)

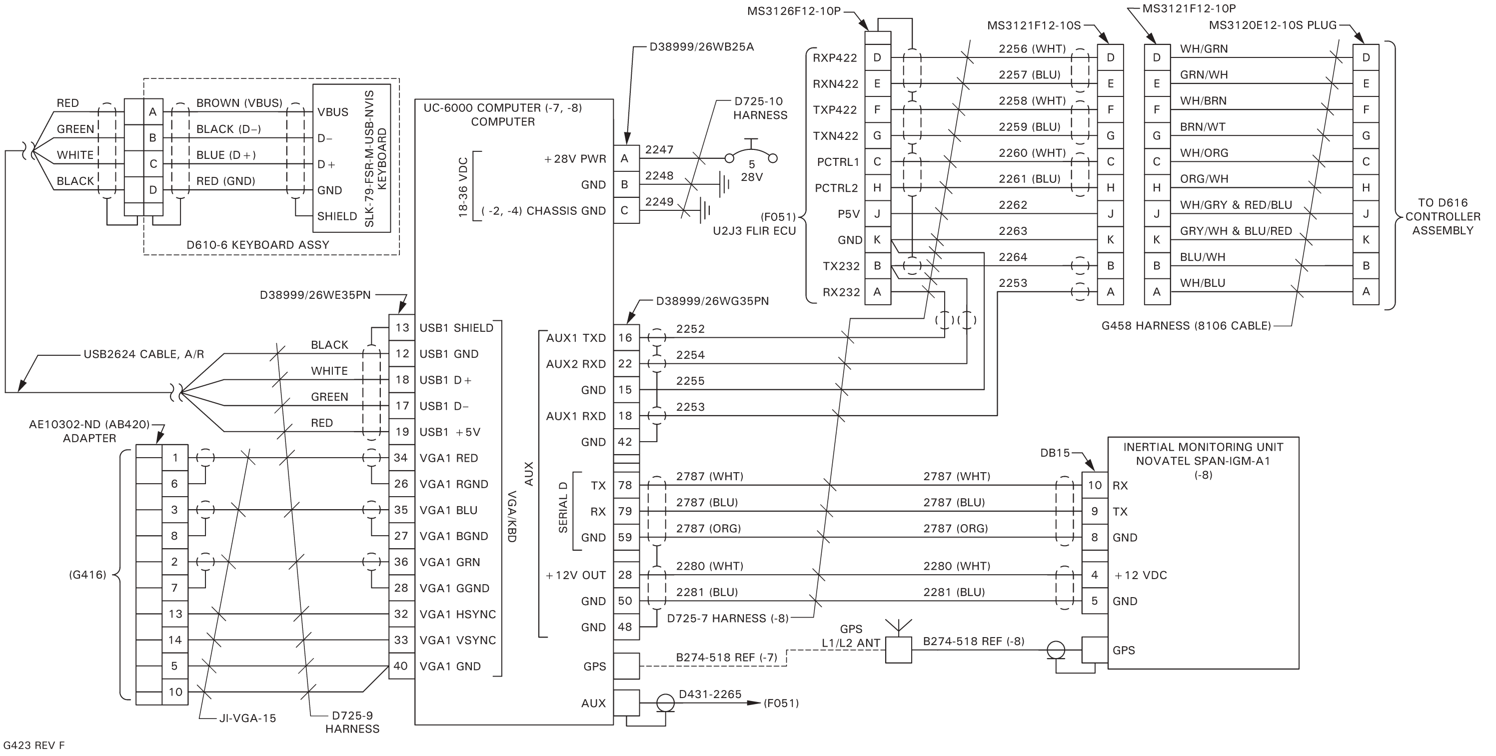

FIGURE 90-18 G608 GPS MAPPING AND MDT INSTALLATION WIRING SCHEMATIC

CHAPTER 92

ENG VERSION

Section	Title	Page
92-00	Description	92.1
92-10	A826-18 Transceiver Installation (FM1)	92.3
92-20	C023-24 Tailcone Assembly	92.4
92-30	C599-7 Airspeed Indicator	92.4
92-40	C720-1 Support Installation	92.4
92-50	D097 HD Micro Camera Installations	92.4
92-51	D097-36 HD Micro Camera Installation (Windshield Bow)	92.5
92-52	D097-37 HD Micro Camera Installation (Aft-center Cabin)	92.6
92-53	D097-38 HD Micro Camera Installation (Tail)	92.8
92-54	D097 HD Micro Camera Controller	92.10
92-60	F003-19 Seat Removal	92.11
92-70	Landing Gear Assembly	92.11
92-80	F060 Remote Transmit Switch Installations	92.11
92-90	F075-1 EFIS Installation	92.12
92-100	F082-21 Fairing Installation	92.12
92-110	F461-4 Cover Assembly	92.12
92-120	G197-13 Window	92.12
92-130	G425-1 Wall Installation	92.13
92-140	G445-2 Aux Circuit Breaker Panel Installation	92.13
92-150	G448 Aft Monitors Installation	92.14
92-151	G448-1 10-inch Monitor	92.15
92-152	G448-1 Five-inch Left Hand Monitor	92.16
92-153	G448-2 Five-inch Right Hand Monitor	92.17
92-160	G449 Forward Monitors Installation	92.18
92-170	G454-1 Camera System Installation	92.19
92-171	D050-14 Gimbal Installation	92.19
92-172	E002-2 Laptop Assembly	92.25
92-173	E003-7 Aux Box Assembly	92.26
92-180	G456-1 Microwave System Installation	92.27
92-181	D558-5 Controller Assembly	92.27
92-182	ARC-CM-TX-RX-CR-01 Controller	92.29
92-183	CMTX7-LITE Transmitter	92.30
92-184	PA16-series Pod Antenna	92.31
92-185	GPS-1270FW Antenna	92.32

CHAPTER 92

ENG VERSION (Continued)

Section	Title	Page
92-190	Antenna Installations	92.33
92-191	G457-1 Antenna Installation (Transponder)	92.33
92-192	G457-2 Antenna Installation (TV Tuner)	92.34
92-193	G457-3 Antenna Installation (Scanner)	92.35
92-200	G470-1 Aft Console Installation	92.36
92-210	G487-1 FM Transceivers Installation	92.36
92-220	G489-1 Scanner Installation	92.38
92-230	G490-1 Talent Light Installation	92.39
92-231	D553-1 (Forward Talent) Light Assembly	92.39
92-232	ILED-MA (Aft Talent) Light	92.40
92-240	G491 TV Receiver Provision Installation	92.40
92-241	Distribution Amp	92.41
92-242	Digital TV Receiver	92.42
92-250	G492-1 Audio System Installation	92.43
92-251	Forward Audio Panels	92.44
92-252	Aft Console Audio Panels	92.45
92-253	Digital Router	92.46
92-260	G493-1 Video Components Installation	92.47
92-270	G496-1 DVR Installation	92.48
92-280	Aux Electrical System Installation	92.49
92-285	D301 Ballast Installation	92.49
92-290	Wiring Diagrams	92.51

CHAPTER 92

ENG VERSION

92-00 Description

The Electronic News Gathering (ENG) version of the R66 helicopter (R66 Turbine Newscopter) is configured for a typical news crew consisting of a pilot (in standard, right front seat), an onboard reporter in the left front seat, and a camera operator in the left aft seat.

The ENG version is a four-place helicopter. An equipment console is installed in lieu of the center aft seat.

The camera operator uses a laptop controller to operate an HD video camera and zoom lens mounted to a gyro-stabilized gimbal on the helicopter chin. Micro cameras are located in the cabin for filming an onboard reporter, and another micro camera is mounted to the horizontal stabilizer sometimes used for weather reporting or to display the aircraft in flight.

A seven-inch monitor and a Geneva digital audio controller are located on each side of the instrument console. A ten-inch monitor is mounted on an arm assembly in front of the left aft passenger and controls are located in the equipment console. Each monitor allows for independent monitoring and transmitting of video from cameras.

R66 ENG is equipped with a microwave system which provides live broadcasting capability.

Other features include a video recorder, TV tuners for monitoring local television broadcasts, and radios for monitoring AM/FM radio broadcasts and for talking with ground personnel.

ENG equipment has a dedicated circuit breaker panel with a second master switch. Some ENG equipment is 14-volt equipment (R66 electrical system is 28-volt) requiring a separate 14-volt sub-bus powered by a voltage converter.

Flight with gimbal camera removed is permissible with D050-13 cover assembly installed. Refer to § 92-171 Part F for maintenance procedures.

Flight with pod antenna removed is permissible with mounting brackets removed and cables stowed. Refer to § 92-184 Part E for maintenance procedures.

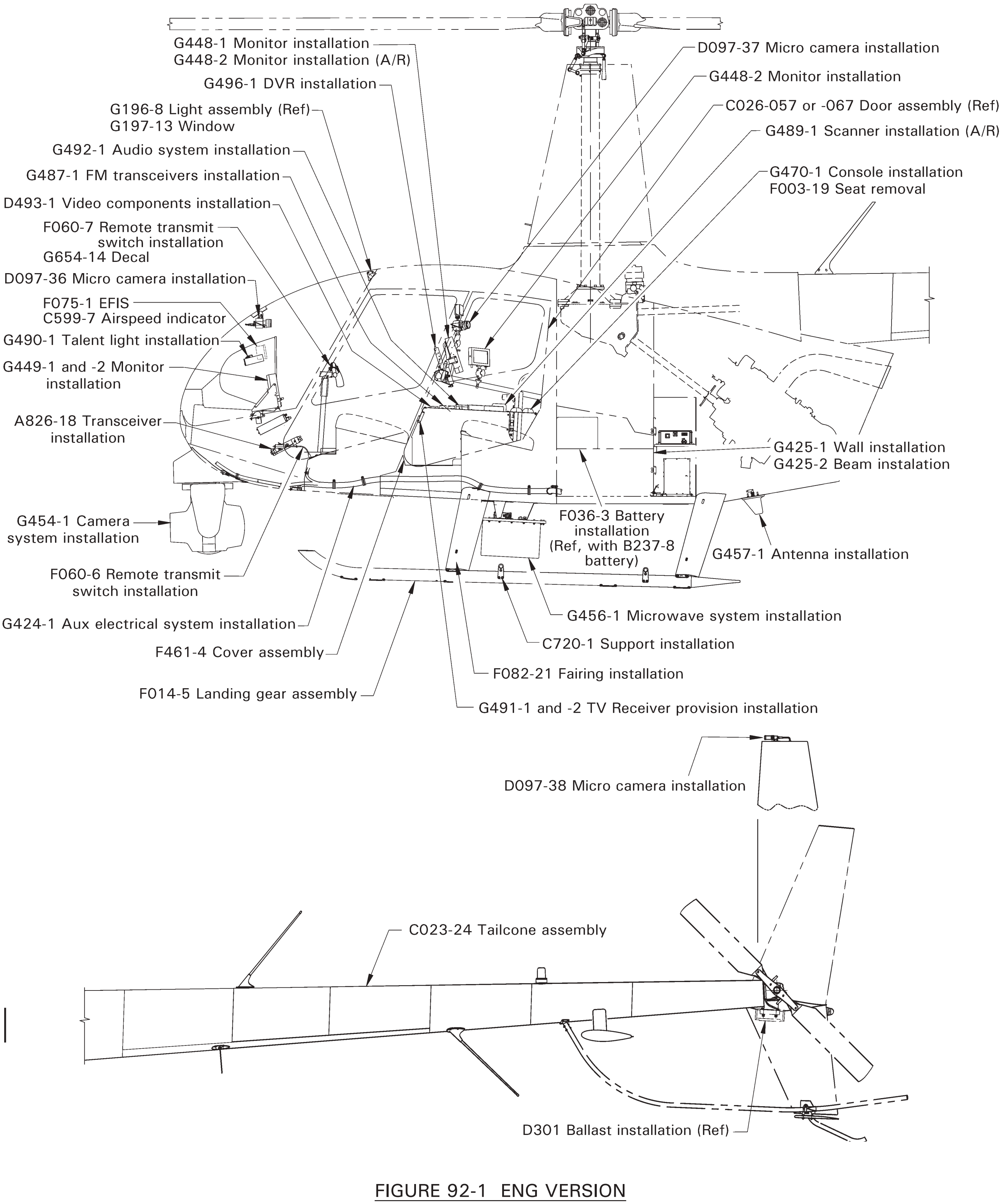

FIGURE 92-1 ENG VERSION

92-10 A826-18 Transceiver Installation (FM1)

A. Description

The A826-18 (Kenwood TK-7180 series or TK-8180 series) FM transceiver is installed in the avionics console and includes an antenna, associated wiring, and mounting hardware. The transceivers are used by the pilot and/or crew to communicate with ground-based media personnel.

B. Schematic

Refer to Figure 92-3 for A826-18 transceiver installation wiring diagram.

C. Removal

1. Refer to Figure 92-1. Turn battery & avionics switches off and pull out FM1 (10 amp) circuit breaker at panel.
2. Loosen radio key securing A824-18 transceiver to upper console radio tray.
3. Remove transceiver from tray. Disconnect G459 harness assembly from back of transceiver and remove transceiver.

D. Installation

1. Refer to Figure 92-1. Turn battery & avionics switches off and pull out FM1 (10 amp) circuit breaker at panel.
2. Connect G459 harness assembly to A824-18 transceiver and verify security. Install transceiver in upper console radio tray.
3. Tighten radio key securing transceiver to tray. Verify equipment security.
4. Push in FM1 (10 amp) circuit breaker at panel. Turn battery & avionics switches on.
5. Perform appropriate functional checks per Kenwood TK-7180/TK-8180 FM Transceiver Instruction Manual. Turn battery & avionics switches off.

E. Scheduled Inspections

Every 100-hour or annual inspection, inspect A824-18 transceiver for proper installation (refer to R66 Illustrated Parts Catalog Chapter 92) & proper operation per Part D steps 4 and 5.

F. Special Inspections

1. Refer to Figure 92-1. Turn battery & avionics switches off. Open circuit breaker panel.
2. As required, remove A824-18 transceiver per Part C. Inspect condition of and verify no obvious damage to transceiver, circuit breaker, and wiring. Verify no loose, chafed, or broken wires or terminals. Verify no evidence of arcing. Verify equipment security.
3. Secure circuit breaker panel. Install transceiver per Part D if removed.

92-20 C023-24 Tailcone Assembly

A. Description

Refer to Figure 92-1. The C023-24 tailcone assembly has wiring provisions for the ENG version's D097-38 HD micro camera (tail).

B. Maintenance Procedures

Refer to § 53-40 for tailcone assembly maintenance procedures.

92-30 C599-7 Airspeed Indicator

A. Description

Refer to Figure 92-1. C599-7 (120 knot V_{NE}, KM/H) airspeed indicator replaces C599-2 (140 knot V_{NE}, KM/H) airspeed indicator.

B. Maintenance Procedures

Refer to § 95-22 for airspeed indicator maintenance procedures.

92-40 C720-1 Support Installation

A. Removal

Refer to Figure 92-1. Remove hardware securing C719-1 support to C242 skid tube and remove support.

B. Installation

Install hardware securing C719-1 support to C242 skid tube, special torque bolt per § 20-33, and torque stripe per Figure 5-1.

92-50 HD Micro Camera Installations

A. Description

The micro camera system consists of three small cameras and their control units. The micro cameras are mounted at the tip of the horizontal stabilizer, on the windshield bow, and in the center of the cabin. The control units are located in the rear equipment console. The horizontal stabilizer camera is enclosed in a weatherproof case.

B. Schematic

Refer to Figure 92-4 for D097 HD micro camera installation wiring diagram.

92-51 D097-36 HD Micro Camera Installation (Windshield Bow)

A. Removal

1. Refer to Figure 92-1. Turn battery & news equipment switches off, and pull out MICRO CAMS (2 amp) circuit breaker at panel.
2. Disconnect CV505/345-10FTCBLE cable and G459-2798 wire from CV345-CS/CSB camera at connectors.
3. Remove D368-2 clamps securing wiring to windshield bow and remove camera.
4. As required, remove screws securing D368-8 mount and D368-10 plate to camera and remove mount and plate.

B. Installation

1. Refer to Figure 92-1. Turn battery & news equipment switches off, and pull out MICRO CAMS (2 amp) circuit breaker at panel.
2. If removed, install screws securing D368-10 plate and D368-8 mount to CV345-CS/CSB camera. Verify security.
3. Install D368-2 clamps every six inches (5 maximum) securing wiring to windshield bow. Verify security.
4. Connect CV505/345-10FTCBLE cable and G459-2798 wire to camera at connectors. Verify security.
5. Push in MICRO CAMS circuit breaker (2 amp) at panel. Turn battery & news equipment switches on.
6. Perform appropriate functional checks per Marshall Electronics CV345 Operation Manual. Turn battery & news equipment switches off.

C. Scheduled Inspections

Every 100-hour or annual inspection, inspect CV345-CS/CSB micro camera for proper installation (refer to R66 Illustrated Parts Catalog Chapter 92) & proper operation per Part B steps 5 and 6.

D. Special Inspections

1. Refer to Figure 92-1. Turn battery & news equipment switches off. Open news equipment circuit breaker panel.
2. As required, remove CV345-CS/CSB micro camera per Part A. Inspect condition of and verify no obvious damage to micro camera, mount, circuit breaker, and wiring. Verify no loose, chafed, or broken wires or terminals. Verify no evidence of arcing. Verify equipment security.
3. Secure circuit breaker panel. Install micro camera per Part B if removed.

92-52 D097-37 HD Micro Camera Installation (Aft-center Cabin)

A. Removal

1. Remove ILED-MA (aft talent) light per § 92-232.
2. Refer to Figure 92-1. Turn battery & news equipment switches off, and pull out MICRO CAMS (2 amp) circuit breaker at panel.
3. Disconnect CV505/345-10FTCBLE cable and G459-756 wire from CV345-CS/CSB camera at connectors.
4. Unscrew camera from RAM-B-366-201U arm assembly and remove camera.

B. Installation

1. Refer to Figure 92-1. Turn battery & news equipment switches off, and pull out MICRO CAMS (2 amp) circuit breaker at panel.
2. Screw CV345-CS/CSB camera onto RAM-B-366-201U arm assembly Verify security.
3. Connect CV505/345-10FTCBLE cable and G459-756 wire to camera at connectors. Verify security.
4. Install ILED-MA (aft talent) light per § 92-232.
5. Push in MICRO CAMS circuit breaker (2 amp) at panel. Turn battery & news equipment switches on.
6. Perform appropriate functional checks per Marshall Electronics CV345 Operation Manual. Turn battery & news equipment switches off.

C. Special Inspections

1. Refer to Figure 92-1. Turn battery & news equipment switches off. Open news equipment circuit breaker panel.
2. As required, remove CV345-CS/CSB micro camera per Part A. Inspect condition of and verify no obvious damage to micro camera, RAM-B-366-201U arm assembly, circuit breaker, and wiring. Verify no loose, chafed, or broken wires or terminals. Verify no evidence of arcing. Verify equipment security.
3. Secure circuit breaker panel. Install micro camera per Part B if removed.

Intentionally Blank

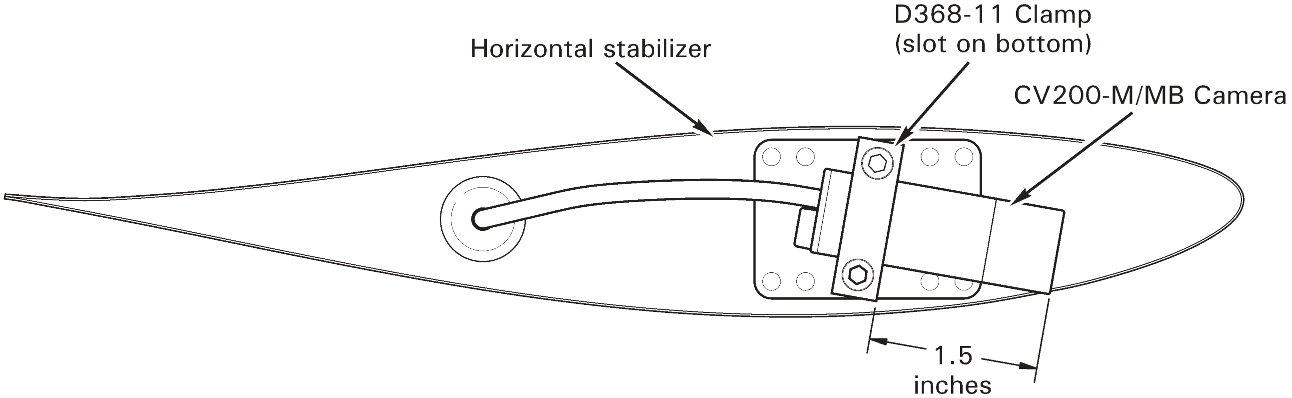

FIGURE 92-2 ENG VERSION

92-53 D097-38 HD Micro Camera Installation (Tail)

A. Removal

1. Refer to Figure 92-1. Turn battery & news equipment switches off, and pull out MICRO CAMS (2 amp) circuit breaker at panel.

NOTE
Use caution not to overstretch or sharply-bend HD camera's cable assembly; cable is soft and susceptible to damage.

2. Remove grommet from inboard side of horizontal stabilizer at tail gearbox. Pull C023 wires through hole in stabilizer to access connectors; disconnect CV200-M/MB camera cable from C023 wires at connectors.
3. Supporting camera, remove screws securing D368-11 clamp to stabilizer and remove camera and clamp. Carefully remove grommet from outboard side of stabilizer and pull camera cable through hole in stabilizer. Remove grommet and clamp.

B. Installation

1. Refer to Figure 92-1. Turn battery & news equipment switches off, and pull out MICRO CAMS (2 amp) circuit breaker at panel.

NOTE
Use caution not to overstretch or sharply-bend HD camera's cable assembly; cable is soft and susceptible to damage.

92-53 D097-38 HD Micro Camera Installation (Tail; continued)

B. Installation (continued)

2. Install grommet on CV200-M/MB camera cable. Tape camera cable connector to 4.5-ft length of lockwire; route lockwire thru horizontal stabilizer toward gearbox and thru opposite hole. Pull camera cable thru stabilizer, remove taped lockwire, and connect C023 wires to cable at connectors. Verify security.
3. Refer to Figure 92-2. Position D368-11 clamp on camera (clamp slot on bottom) with camera protruding 1.5 inches from clamp as shown. Install screws securing clamp and camera to horizontal stabilizer. Verify security.
4. Secure inboard and outboard horizontal stabilizer grommets.
5. Push in MICRO CAMS (2 amp) circuit breaker at panel. Turn battery & news equipment switches on.
6. Perform appropriate functional checks per Marshall Electronics CV200-M/MB Operation Manual. Turn battery & news equipment switches off.

C. Scheduled Inspections

Every 100-hour or annual inspection, inspect CV200-M/MB micro camera for proper installation (refer to R66 Illustrated Parts Catalog Chapter 92) & proper operation per Part B steps 5 and 6.

D. Special Inspections

1. Refer to Figure 92-1. Turn battery & news equipment switches off. Open circuit breaker panel.
2. As required, remove CV200-M/MB micro camera per Part A. Inspect condition of and verify no obvious damage to micro camera, horizontal stabilizer tip and doubler, circuit breaker, and wiring. Verify no loose, chafed, or broken wires or terminals. Verify no evidence of arcing. Verify equipment security.
3. Secure circuit breaker panel. Install micro camera per Part B if removed.

92-54 D097 HD Micro Camera Controller

A. Removal

1. Refer to Figure 92-1. Turn battery & news equipment switches off, and pull out MICRO CAMS (2 amp) circuit breaker at panel.
2. Remove screws securing G472 face to G471 panels and remove face.
3. Remove screws securing D344 support assembly to G472 face.
4. Cut and discard ty-raps as required and disconnect micro camera cable(s) from CV505/345-10FTCBLE and/or CV200-M/MB cable controller(s) at connectors. Detach controller(s) from support assembly (controllers are taped to support).

B. Installation

1. Refer to Figure 92-1. Turn battery & news equipment switches off, and pull out MICRO CAMS (2 amp) circuit breaker at panel.
2. Connect micro camera cable(s) to CV505/345-10FTCBLE and/or CV200-M/MB cable controller(s) at connectors. Verify security. Install ty-raps as required. Cinch ty-raps until snug without overtightening, and trim tips flush with heads.
3. Position controller(s) on D344 support assembly. Install screws securing support to G472 face. Verify security.
4. Install screws securing face to G471 panels. Verify security.
5. Push in MICRO CAMS circuit breaker (2 amp) at panel. Turn battery & news equipment switches on.
6. Perform appropriate functional checks per Marshall Electronics CV200-MB/M or CV345-CS/CSB Operation Manual. Turn battery & news equipment switches off.

C. Scheduled Inspections

Every 100-hour or annual inspection, inspect CV505/345-10FTCBLE and/or CV200-M/MB cable controllers for proper installation (refer to R66 Illustrated Parts Catalog Chapter 92) & proper operation per Part B steps 5 and 6.

D. Special Inspections

1. Refer to Figure 92-1. Turn battery & news equipment switches off. Open circuit breaker panel.
2. As required, remove CV505/345-10FTCBLE and/or CV200-M/MB cable controller(s) per Part A. Inspect condition of and verify no obvious damage to cable controllers, circuit breaker, and wiring. Verify no loose, chafed, or broken wires or terminals. Verify no evidence of arcing. Verify equipment security.
3. Secure circuit breaker panel. Install cable controller(s) per Part B if removed.

92-60 F003-19 Seat Removal

Refer to Figure 92-1. ENG version helicopters have no aft center seat installed. The following equipment is omitted: F628-4 connector assembly, center F628-6 buckle assembly, F931-1 seat assembly, A752-3 angle, & (2) NAS1352-04-8 screw. Associate hardware is replaced or omitted; refer to R66 Illustrated Parts Catalog for installation information.

92-70 Landing Gear Assembly

A. Description

Refer to Figure 92-1. The F014-5 extended landing gear raises the forward cross tube approximately 2 inches higher off the ground, providing additional ground clearance for optional equipment installations that project below the fuselage.

For ground handling, a second set of wheel installation supports is provided forward on the landing gear skids. For ground handling using MT950 towcart, install wheels at forward supports and use cart at aft cross tube as indicated on cart instructions (online at www.robinsonheli.com). For ground handling without towcart, wheels may be installed at all four support locations.

B. Maintenance Procedures

Refer to Chapter 32 for landing gear assembly maintenance procedures (identical to standard gear maintenance procedures unless otherwise specified). Forward wheel support maintenance procedures are located in § 92-40.

92-80 F060 Remote Transmit Switch Installations

A. Description

Refer to Figure 92-1. A handheld remote switch is installed at the co-pilot seat, allowing the occupant to transmit on the radio selected without touching the flight controls, or when the co-pilot flight controls are removed.

The switch plugs into a socket on the base of the seat.

B. Schematic

Refer to Figure 98-24 for F060 intercom system installation wiring diagram.

92-90 F075-1 EFIS Installation

A. Description

Refer to Figure 92-1. The R66 ENG version is equipped with the Garmin G500H Electronic Flight Instrument System (EFIS).

B. Maintenance Procedures

Refer to §§ 95-70 & 97-10 for Garmin G500H EFIS maintenance procedures.

92-100 F082-21 Fairing Installation

A. Description

Refer to Figure 92-1. Extended landing gear F082-21 strut fairings are longer than but are otherwise identical to standard strut fairings. F082-21 fairing installation replaces F082-1 fairing installation.

B. Maintenance Procedures

Refer to § 32-40 fairing assemblies for maintenance procedures.

92-110 F461-4 Cover Assembly

Refer to Figure 92-1. Refer to R66 Illustrated Parts Catalog Chapter 6 for access and inspection panel locations. F461-4 cover assembly replaces F461-1 cover assembly.

92-120 G197-13 Window

A. Description

Refer to Figure 92-1. The G197-13 window illuminates the ENG version instrument console for night lighting. G197-13 window replaces G197-9 window.

B. Maintenance Procedures

Refer to § 33-21 for panel light maintenance procedures. Adjust window laterally as required to ensure even light spread on console.

92-130 G425-1 Wall Installation

A. Removal

1. Refer to Figure 92-1. Open baggage compartment door. Release quarter-turn slot and wing head fasteners securing G428-1 wall assembly to G238-1 bulkhead and G428-2 angles. Carefully remove wall.

B. Installation

1. Refer to Figure 92-1. Open baggage compartment door. Verify no foreign objects aft of wall mounting points. Verify proper installation and security of equipment.
2. Align G428-1 wall assembly quarter-turn slot and wing head fasteners with receptacles on G238-1 bulkhead and G428-2 angles, and lock fasteners. Verify security. Close baggage compartment.

92-140 G445-2 Aux Circuit Breaker Panel Installation

A. Description

ENG equipment has a dedicated circuit breaker panel with a second news master switch, allowing the pilot to easily remove power for the majority of ENG equipment simultaneously.

B. Schematic

Refer to Figure 92-5 for G445-2 aux circuit breaker panel installation wiring diagram.

C. Access

1. Turn battery & news equipment switches off.
2. Remove screws securing G445-2 aux circuit breaker panel to ledge. Carefully lift panel for access.
3. Verify circuit breaker security and inspect wiring condition. Position G445-2 aux circuit breaker panel on ledge and install screws. Verify security.

D. Scheduled Inspections

Every 100-hour or annual inspection, access G445-2 aux circuit breaker panel interior per Part C and inspect panel per standard circuit breaker panel inspection in § 5-45.

E. Special Inspections

Access G445-2 aux circuit breaker panel interior per Part C and inspect panel per standard circuit breaker panel inspection in § 5-45.

92-150 G448 Aft Monitors Installation

A. Description

The aft monitor installation consists of one large main LCD monitor mounted to the cross tube between the front seatbacks and either one or two smaller LCD monitors mounted near the longitudinal tube running above the rear center equipment console.

The large, main LCD monitor is mounted on a pivoting arm. The pivoting arm allows the monitor to be rotated between the stowed position inboard and operating position directly in front of the camera operator. A spring-loaded pin beneath the pivot locks the monitor in the stowed position. Pulling the pin releases the monitor for use. The Velcro tether attached to the monitor should be wrapped around the seat back cross tube to hold the monitor in the operating position. Detaching the tether will cause the monitor to return to the stowed position. Verify monitor locks in position after detaching tether.

> NOTE
>
> Monitor must be stowed below 500 ft AGL. If not stowed, the monitor is a potential source of head injury in an accident.

The main rear LCD monitor may be switched between three input signals. Input A displays nose camera, micro camera, or video recorder images as selected by the video switcher. Input B bypasses the video switcher and displays nose-camera images directly. The accessory input bypasses the video switcher and displays annotated nose-camera images.

One or two smaller auxiliary monitors are installed near the longitudinal tube above the rear equipment console and display TV broadcasts as selected by the TV tuner(s).

B. Schematic

Refer to Figure 92-6 for G448 aft monitors installation wiring diagram.

92-151 G448-1 10-inch Monitor

A. Removal

1. Refer to Figure 92-1. Turn battery & news equipment switches off and pull out 10″ MON (2 amp) circuit breaker at panel.
2. Disconnect G459 harness assembly from HD10CINEROB monitor at connectors. Supporting monitor, remove screws securing monitor to G477-1 arm assembly and remove monitor.

B. Installation

1. Refer to Figure 92-1. Turn battery & news equipment switches off and pull out 10″ MON (2 amp) circuit breaker at panel.
2. Install screws securing HD10CINEROB monitor to G477-1 arm assembly. Verify security.
3. Connect G459 harness assembly to monitor; verify security.
4. Push in 10″ MON (2 amp) circuit breaker at panel. Turn battery & news equipment switches on.
5. Perform appropriate functional checks per Transvideo operator's guide. Turn battery & news equipment switches off.

C. Scheduled Inspections

Every 100-hour or annual inspection, inspect HD10CINEROB monitor for proper installation (refer to R66 Illustrated Parts Catalog Chapter 92) & proper operation per Part B steps 4 and 5.

D. Special Inspections

1. Refer to Figure 92-1. Turn battery & news equipment switches off. Open circuit breaker panel.
2. As required, remove CHD10CINEROB monitor per Part A. Inspect condition of and verify no obvious damage to monitor, circuit breaker, and wiring. Verify no loose, chafed, or broken wires or terminals. Verify no evidence of arcing. Verify equipment security.
3. Secure circuit breaker panel. Install monitor per Part B if removed.

92-152 G448-1 Five-inch Left Hand Monitor

A. Removal

1. Refer to Figure 92-1. Turn battery & news equipment switches off and pull out 5″ MONS (2 amp) circuit breaker at panel.
2. Disconnect G459 harness assembly from VFM-056W monitor. Supporting monitor, remove hardware securing monitor to G474-5 bracket and remove monitor.

B. Installation

1. Refer to Figure 92-1. Turn battery & news equipment switches off and pull out 5″ MONS (2 amp) circuit breaker at panel.
2. Install hardware securing VFM-056W monitor to G474-5 bracket. Verify security.
3. Connect G459 harness assembly to monitor; verify security.
4. Push in 5″ MONS (2 amp) circuit breaker at panel. Turn battery & news equipment switches on.
5. Perform appropriate functional checks per TVLogic VRM-056W Operation Manual. Turn battery & news equipment switches off.

C. Scheduled Inspections

Every 100-hour or annual inspection, inspect VFM-056W monitor for proper installation (refer to R66 Illustrated Parts Catalog Chapter 92) & proper operation per Part B steps 4 and 5.

D. Special Inspections

1. Refer to Figure 92-1. Turn battery & news equipment switches off. Open circuit breaker panel.
2. As required, remove VFM-056W monitor per Part A. Inspect condition of and verify no obvious damage to monitor, G474-5 bracket, circuit breaker, and wiring. Verify no loose, chafed, or broken wires or terminals. Verify no evidence of arcing. Verify equipment security.
3. Secure circuit breaker panel. Install monitor per Part B if removed.

92-153 G448-2 Five-inch Right Hand Monitor

A. Removal

1. Refer to Figure 92-1. Turn battery & news equipment switches off and pull out 5″ MONS (2 amp) circuit breaker at panel.
2. Disconnect G459 harness assembly from VFM-056W monitor. Supporting monitor, loosen B630-14 mount handle to release mount ball and remove monitor with ball attached. Unscrew and remove ball as required.

B. Installation

1. Refer to Figure 92-1. Turn battery & news equipment switches off and pull out 5″ MONS (2 amp) circuit breaker at panel.
2. Screw B630-14 mount ball in bottom of monitor if removed. Position VFM-056W monitor and attached ball in mount and tighten handle. Verify security.
3. Connect G459 harness assembly to monitor; verify security.
4. Push in 5″ MONS (2 amp) circuit breaker at panel. Turn battery & news equipment switches on.
5. Perform appropriate functional checks per TVLogic VRM-056W Operation Manual. Turn battery & news equipment switches off.

C. Scheduled Inspections

Every 100-hour or annual inspection, inspect VFM-056W monitor for proper installation (refer to R66 Illustrated Parts Catalog Chapter 92) & proper operation per Part B steps 4 and 5.

D. Special Inspections

1. Refer to Figure 92-1. Turn battery & news equipment switches off. Open circuit breaker panel.
2. As required, remove VFM-056W monitor per Part A. Inspect condition of and verify no obvious damage to monitor, B630-14 mount, circuit breaker, and wiring. Verify no loose, chafed, or broken wires or terminals. Verify no evidence of arcing. Verify equipment security.
3. Secure circuit breaker panel. Install monitor per Part B if removed.

92-160 G449 Forward Monitors Installation

A. Description

The forward monitor installation consists of two small LCD monitors mounted to the left and right of the instrument console. The right monitor displays nose camera, micro camera, or video tape recorder images as selected by the video switcher. The left monitor displays TV broadcasts as selected by the TV tuner.

B. Schematic

Refer to Figure 92-7 for G449 forward monitors installation wiring diagram.

C. Removal

1. Refer to Figure 92-1. Turn battery & news equipment switches off and pull out 7″ MONS (2 amp) circuit breaker at panel.
2. Disconnect G459 harness assembly from BVB07 monitor(s). Supporting monitor(s), remove screws securing monitor(s) to G474 bracket assembly and remove monitor(s).

D. Installation

1. Refer to Figure 92-1. Turn battery & news equipment switches off and pull out 7″ MON (2 amp) circuit breaker at panel.
2. Install screws securing BVB07 monitor(s) to G474 bracket assembly. Verify security.
3. Connect G459 harness assembly to monitor; verify security.
4. Push in 7″ MON (2 amp) circuit breaker at panel. Turn battery & news equipment switches on.
5. Perform appropriate functional checks per Boland Communications BVB07 User Manual. Turn battery & news equipment switches off.

E. Scheduled Inspections

Every 100-hour or annual inspection, inspect BVB07 monitor(s) for proper installation (refer to R66 Illustrated Parts Catalog Chapter 92) & proper operation per Part D steps 4 and 5.

F. Special Inspections

1. Refer to Figure 92-1. Turn battery & news equipment switches off. Open circuit breaker panel.
2. As required, remove BVB07 monitor(s) per Part C. Inspect condition of and verify no obvious damage to monitor(s), G474 bracket assemblies, circuit breaker, and wiring. Verify no loose, chafed, or broken wires or terminals. Verify no evidence of arcing. Verify equipment security.
3. Secure circuit breaker panel. Install monitor(s) per Part D if removed.

92-170 G454-1 Camera System Installation

A. Description

The nose-mounted camera system consists of a gyro-stabilized, gimbal-mounted video camera in the chin and a power junction box in the main baggage compartment. A fairing between the camera ball and chin minimizes the aerodynamic effects of the camera. The camera is operated from the left rear seat via a laptop controller.

When not in use, the laptop controller may be stowed and secured in the recess at the aft end of the rear equipment console.

Flight with gimbal assembly removed is permissible with D050-13 cover assembly installed. Refer to § 92-171 Part F for maintenance procedures.

B. Schematic

Refer to Figure 92-8 for G454-1 camera system installation wiring diagram.

92-171 D050-14 Gimbal Installation

A. Removal

1. Refer to Figure 92-1. Turn battery & news equipment switches off and pull out GIMBAL CAMERA (10 amp) circuit breaker at panel.
2. Remove screws securing G427 fairings to chin and remove fairings.
3. Disconnect E195-2 and E204-6 cable assemblies from E801-1 gimbal assembly.
4. Have a second person support gimbal assembly. Remove screws securing D374-3 spacer and gimbal assembly to D385-4 mount assembly and remove spacer and gimbal.
5. Configure helicopter for flight with gimbal assembly removed per Part F as required.

B. Installation

1. Refer to Figure 92-1. Turn battery & news equipment switches off and pull out GIMBAL CAMERA (10 amp) circuit breaker at panel.
2. Configure helicopter for flight with gimbal assembly installed per Part F as required.
3. Have a second person support E801-1 gimbal assembly. Install hardware securing D374-3 spacer and gimbal assembly to D385-4 mount assembly. Verify security.
4. Connect E195-2 and E204-6 cable assemblies to gimbal assembly. Verify security.
5. Install screws securing G427 fairings to chin. Verify security.
6. Push in GIMBAL CAMERA (10 amp) circuit breaker at panel. Turn battery & news equipment switches on.
7. Perform appropriate function checks per Part C.

92-171 D050-14 Gimbal Installation (continued)

C. Function Checks

1. Power switch: (Locking Toggle)
   'Off' LED is illuminated when system power is off. Moving the locking switch up powers up the camera, laptop controller, and gimbal.

Wait 60 seconds after power is switched to on. The wait period ensures that gimbal finishes its initialization sequence. Keep system on for the remainder of the function test.

2. Pan/Tilt Mode Switch: (Momentary Toggle)
   Changes modes by moving switch in the direction of the desired mode. Mode selected is illuminated.
   A mode: Inertial Mode.
   Gimbal Pan and Tilt are controlled via joystick X and Y motions.
   B mode: Not used.
   C mode: Position Mode.
   Gimbal position is referenced to user specified positions via Pan/Tilt knobs.

3. Roll Mode Switch: (Momentary Toggle)
   Changes modes by moving switch in direction of desired mode. Mode selected is illuminated.
   A mode: Inertial Mode.
   Gimbal Roll is controlled via joystick rotational motions about Z axis and ROLL TRIM knob.
   B mode: Position Mode.
   Gimbal position is controlled via ROLL POSITION knob.

4. Panel Lights Dimmer Knob
   Adjust the illumination level of the panel.

5. Roll Position Knob:
   Controls Roll position while ROLL Mode is in "B".
   Inactive when ROLL Mode is in "A".

6. Tilt Position Knob (Mode C) / Fine AZ Drift (Mode A):
   Controls Tilt Position while PAN/TILT Mode is in "C".
   Provides fine pan drift control when PAN/TILT Mode is in "A".

7. Pan Position Knob
   Controls Pan Position while PAN/TILT Mode is in "C".
   Inactive when PAN/TILT Mode is in "A".

8. Roll Trim Knob:
   Controls Roll Position while Roll Mode is in "A".

9. Tilt Drift Knob:
   Controls Tilt Drift while PAN/TILT Mode is in "A".
   Inactive when PAN/TILT Mode is in "C".

92-171 D050-14 Gimbal Installation (continued)

C. Function Checks (continued)

10. Coarse Pan (AZ) Drift Knob:
Controls Pan Drift while PAN/TILT Mode is in "A".
Inactive when PAN/TILT Mode is in "C".

11. OPT EXT Lens Switch: (Two-position toggle)
Controls position of lens extender. Position selected is illuminated.
2x: Lens extender inserted
1x: Lens extender extracted

12. Roll Polarity Switch:
Controls polarity of Roll joystick and Roll Trim Command. Position selected is illuminated. Bottom two positions are not used.
"+": Joystick moves CW; Roll Axis moves CCW.
"−": Joystick moves CW; Roll Axis moves CW.

13. DIG EXT Switch: (Two-position toggle)
Controls the digital zoom function. (Feature not active in some cameras)
2x: Activate digital zoom
1x: Deactivate digital zoom

14. Zoom Rate Knob:
Controls magnitude of the zoom rocker switch.
CCW: Decrease zoom rocker response
CW: Increase zoom rocker response

15. Joystick Polarity Knob: (Four position)
Controls polarity of joystick command. Position selected is illuminated.
++: Positive Tilt / Positive Pan
+−: Positive Tilt / Negative Pan
−+: Negative Tilt / Positive Pan
−−: Negative Tilt / Negative Pan

16. Joystick Rate Mode Switch: (Two-position toggle)
Controls Joystick Rate Mode. Mode selected is illuminated.
Man: Manual Mode – Rate is controlled using Joystick Rate knob only
Auto: Automatic Mode – Rate is proportionally scaled to field of view

92-171 D050-14 Gimbal Installation (continued)

C. Function Checks (continued)

17. Joystick Rate Knob:
    Controls Joystick Rate Scaling based on Joystick Rate Mode Switch.
    Manual Mode:
    CCW: Decrease Joystick Rate
    CW: Increase Joystick Rate
    Automatic Mode:
    Zoom in picture to maximum (narrowest field of view) and set desired joystick rate using Joystick Rate Knob. As the zoom is reduced (increased field of view), the joystick rate will be increased automatically to compensate for the increased field of view.

18. Focus Knob:
    Controls camera focus (CW – Infinity, CCW – Near).

19. Focus Helper Button: (Momentary Toggle)
    Activates and Deactivates Transvideo Monitor "Focus Helper" function in the monitor. Only available in some models. Corresponding LED light on switch test box (WA5) should light up when activated.

20. Zoom Rocker Switch:
    Controls Camera Zoom (T – Zoom in, W – Zoom Wide).

21. Ikegami RM-11 Camera Controller:
    Test the following items:
    Mode:
    BARS: Display color bar on screen.
    CAL: Display gray scale.
    Gain:
    up toggle (image appears brighter in each incremental toggle)
    down toggle (image appears dimmer in each decrement toggle)
    AWB and ABB:
    On screen display will indicate activation of the selected adjustment.
    Camera shutter:
    On screen display will indicate selected value.
    Iris:
    CW open (brighter). CCW close (dimmer).

22. Joystick Snap Zoom Button:
    Allows the operator to immediately zoom in picture to maximum.
    Depressed (Fully zoomed in). Not depressed (Zoom rocker setting).

23. Lower Joystick Button:
    Not used.

92-171 D050-14 Gimbal Installation (continued)

C. Function Checks (continued)

24. Joystick:
When Pan / Tilt mode is in "A", X and Y axes Joystick movements control Pan and Tilt Gimbal movements respectively. Inactive when Pan / Tilt mode is in "C". When Roll Mode is in "A", Joystick rotation in Z axis controls Roll position. Inactive when ROLL Mode is in "B".

25. Camera Menu Button: (Momentary and Rotary)
Click the Button to access camera menu. Rotate button to navigate through items in the menu. Click button to confirm selection.

26. Neutral Density (ND) Filter Position Knob: (Four positions)
Controls which ND filter is used.
1: Clear
2: 1/8 ND (dark)
3: 1/16 ND (darker)
4: 1/64 ND (darkest)

27. Electronic Color Correction (ECC) Filter: (Two-position toggle)
Toggles between two ECC filters.
Top: 5600K (Warm orange shade color)
Bottom: 3200K (Cold blue shade color)

28. Remote Video Switcher Toggle: (Momentary toggle)
Switches output of main video switcher between Gimbal camera and Micro camera. Corresponding LED light on switch test box (WA5) should light up when activated.

29. VTR Start / Stop Toggle: (Two-position toggle)
Toggle to start and stop recording of the video recorder. Operates on selected video recorders only. Corresponding LED light on switch test box (WA5) should light up when activated.

30. Transmit (XMIT) Switch: (Momentary and Latched toggle)
Toggle switch outward and hold switch to transmit via selected radio. Toggle switch inward to continuously transmit via selected radio. Corresponding LED light on switch test box (WA5) should light up when activated.

31. Intercom (INTCM) Switch: (Momentary and Latched toggle)
Toggle switch outward and hold switch to communicate via intercom. Toggle switch inward to continuously communicate via intercom. Corresponding LED light on switch test box (WA5) should light up when activated.

92-171 D050-14 Gimbal Installation (continued)

D. Scheduled Inspections

Every 100-hour or annual inspection, inspect E801-1 gimbal assembly for proper installation (refer to R66 Illustrated Parts Catalog Chapter 92) & proper operation per Part B steps 5 and 6.

E. Special Inspections

1. Refer to Figure 92-1. Turn battery & news equipment switches off. Open circuit breaker panel.
2. As required, remove E801-1 gimbal assembly per Part A. Inspect condition of and verify no obvious damage to gimbal, G427 fairings, circuit breaker, and wiring. Verify no loose, chafed, or broken wires or terminals. Verify no evidence of arcing. Verify equipment security.
3. Secure circuit breaker panel. Install gimbal per Part B if removed.

F. Configurations for Flight

1. Configuration for Flight with Gimbal Camera Removed
   a. Remove E801-1 gimbal assembly per Part A.
   b. Install clean, dry plastic bags individually over exposed E195-2 and E204-6 cable assembly connectors to prevent moisture or debris from contacting connector sockets/pins; secure with ty-raps. Stow and secure cables with ty-raps to surrounding structure. Verify security.
   c. Verify cable assembly clearance to tail rotor pedal controls thru full range of travel.
   d. Install screws securing D050-13 cover to chin. Verify security.
   e. Revise Weight and Balance Record in R66 Pilot's Operating Handbook (POH) Section 6 to incorporate the following data:

   Subtract:

Item	Weight	Long. Arm	Long. Moment	Lat. Arm	Lat. Moment
ENG Gimbal	56.4 lb	6.2 in.	349.7 in.-lb	0 in.	0 in.-lb

2. Configuration for Flight with Gimbal Camera Installed
   a. Remove screws securing D050-13 cover to chin and remove cover.
   b. Remove and discard ty-raps and plastic bags securing E195-2 and E204-6 cable assemblies to surrounding structure.
   c. Install E801-1 gimbal assembly per Part B.
   d. Revise Weight and Balance Record in R66 Pilot's Operating Handbook (POH) Section 6 to incorporate the following data:

   Add:

Item	Weight	Long. Arm	Long. Moment	Lat. Arm	Lat. Moment
ENG Gimbal	56.4 lb	6.2 in.	349.7 in.-lb	0 in.	0 in.-lb

92-172 E002-2 Laptop Assembly

A. Removal

1. Refer to Figure 92-1. Turn battery & news equipment switches off and pull out GIMBAL CAMERA (10 amp) circuit breaker at panel.
2. Disconnect G459 harness assembly from E002-2 laptop assembly and remove laptop.

B. Installation

1. Refer to Figure 92-1. Turn battery & news equipment switches off and pull out GIMBAL CAMERA (10 amp) circuit breaker at panel.
2. Connect G459 harness assembly to E002-2 laptop assembly.
3. Push in GIMBAL CAMERA (10 amp) circuit breaker at panel. Turn battery & news equipment switches on.
4. Perform appropriate function checks per § 92-171 Part C.

C. Scheduled Inspections

Every 100-hour or annual inspection, inspect E002-2 laptop assembly for proper installation (refer to R66 Illustrated Parts Catalog Chapter 92) & proper operation per Part B steps 3 and 4.

D. Special Inspections

1. Refer to Figure 92-1. Turn battery & news equipment switches off. Open circuit breaker panel.
2. As required, remove E002-2 laptop assembly per Part A. Inspect condition of and verify no obvious damage to laptop, circuit breaker, and wiring. Verify no loose, chafed, or broken wires or terminals. Verify no evidence of arcing. Verify equipment security.
3. Secure circuit breaker panel. Install laptop per Part B if removed.

92-173 E003-7 Aux Box Assembly

A. Removal

1. Refer to Figure 92-1. Turn battery & news equipment switches off and pull out GIMBAL CAMERA (10 amp) circuit breaker at panel.
2. Remove baggage compartment wall per § 92-130.
3. Disconnect G459 harness assembly and E195-2, E199-3, and E204-6 cable assemblies from E003-7 auxiliary box assembly.
4. Remove screws securing D429 brackets to D429-1 support assemblies and remove aux box.
5. As required, remove screws securing D429 brackets to aux box and remove brackets.

B. Installation

1. Refer to Figure 92-1. Turn battery & news equipment switches off and pull out GIMBAL CAMERA (10 amp) circuit breaker at panel.
2. As required, install screws securing D429 brackets to E003-7 aux box assembly. Verify security.
3. Install screws securing brackets to D429-1 support assemblies. Verify security.
4. Connect G459 harness assembly and E195-2, E199-3, and E204-6 cable assemblies to aux box. Verify security.
5. Install baggage compartment wall per § 92-130.
6. Push in GIMBAL CAMERA (10 amp) circuit breaker at panel. Turn battery & news equipment switches on.
7. Perform appropriate function checks per § 92-171 Part C.

C. Scheduled Inspections

Every 100-hour or annual inspection, inspect E003-7 aux box assembly for proper installation (refer to R66 Illustrated Parts Catalog Chapter 92) & proper operation per Part B steps 6 and 7.

D. Special Inspections

1. Refer to Figure 92-1. Turn battery & news equipment switches off. Open circuit breaker panel.
2. As required, remove E003-7 aux box assembly per Part A. Inspect condition of and verify no obvious damage to aux box, circuit breaker, and wiring. Verify no loose, chafed, or broken wires or terminals. Verify no evidence of arcing. Verify equipment security.
3. Secure circuit breaker panel. Install aux box per Part A if removed.

92-180 G456-1 Microwave System Installation

A. Description

The microwave transmitting system consists of a microwave transmitter, power amplifier, control panels, and a directional antenna pod.

The microwave transmitter is located in the main baggage compartment. The control panel for the transmitter is located in the rear equipment console.

The directional antenna pod is located beneath the aircraft belly at approximately the center of the cabin, and the power amplifier is mounted on top of it. The directional antenna pod contains a GPS tracking system which keeps the antenna aimed at a ground-based receive site. The antenna has its own control panel located in the rear equipment panel.

Flight with pod antenna removed is permissible with mounting brackets removed and cables stowed. Refer to § 92-184 Part E for maintenance procedures.

B. Schematic

Refer to Figure 92-9 for G456-1 microwave system installation wiring diagram.

92-181 D588-5 Controller Assembly

A. Removal

1. Refer to Figure 92-1. Turn battery & news equipment switches off, and pull out MWAVE XMIT (5 amp) circuit breaker at panel.
2. Disconnect G459 harness assembly from D588-5 controller assembly.
3. Remove screws securing G472 face to G471 panels.
4. Remove screws securing controller to G472 face and remove controller.

B. Installation

1. Refer to Figure 92-1. Turn battery & news equipment switches off, and pull out MWAVE XMIT (5 amp) circuit breaker at panel.
2. Install screws securing D588-5 controller assembly to G472 face. Verify security.
3. Install screws securing G472 face to G471 panels. Verify security.
4. Connect G459 harness assembly to controller. Verify security.
5. Push in MWAVE XMIT (5 amp) circuit breaker at panel. Turn battery & news equipment switches on.
6. Perform appropriate post-installation function checks. Turn battery switch off.

92-181 D588-5 Controller Assembly (continued)

C. Scheduled Inspections

Every 100-hour or annual inspection, inspect D588-5 controller assembly for proper installation (refer to R66 Illustrated Parts Catalog Chapter 92) & proper operation per Part B steps 5 and 6.

D. Special Inspections

1. Refer to Figure 92-1. Turn battery & news equipment switches off. Open circuit breaker panel.
2. As required, remove D588-5 controller assembly per Part A. Inspect condition of and verify no obvious damage to controller, circuit breaker, and wiring. Verify no loose, chafed, or broken wires or terminals. Verify no evidence of arcing. Verify equipment security.
3. Secure circuit breaker panel. Install controller per Part A if removed.

92-182 ARC-CM-TX-RX-CR-01 Controller

A. Removal

1. Refer to Figure 92-1. Turn battery & news equipment switches off, and pull out MWAVE XMIT (5 amp) circuit breaker at panel.
2. Remove hardware securing ARC-CM-TX-RX-CR-01 controller to G472 face.
3. Lift controller from console; disconnect G459 harness assembly from controller.

B. Installation

1. Refer to Figure 92-1. Turn battery & news equipment switches off, and pull out MWAVE XMIT (5 amp) circuit breaker at panel.
2. Connect G459 harness assembly to ARC-CM-TX-RX-CR-01 controller. Verify security.
3. Position controller in aft console and install hardware securing controller to G472 face. Verify security.
4. Push in MWAVE XMIT (5 amp) circuit breaker at panel. Turn battery & news equipment switches on.
5. Perform appropriate post-installation function checks. Turn battery switch off.

C. Scheduled Inspections

Every 100-hour or annual inspection, inspect ARC-CM-TX-RX-CR-01 controller for proper installation (refer to R66 Illustrated Parts Catalog Chapter 92) & proper operation per Part B steps 4 and 5.

D. Special Inspections

1. Refer to Figure 92-1. Turn battery & news equipment switches off. Open circuit breaker panel.
2. As required, remove ARC-CM-TX-RX-CR-01 controller per Part A. Inspect condition of and verify no obvious damage to controller, circuit breaker, and wiring. Verify no loose, chafed, or broken wires or terminals. Verify no evidence of arcing. Verify equipment security.
3. Secure circuit breaker panel. Install controller per Part A if removed.

92-183 CMTX7-LITE Transmitter

A. Removal

1. Refer to Figure 92-1. Turn battery & news equipment switches off, and pull out MWAVE XMIT (5 amp) circuit breaker at panel.
2. Remove baggage compartment wall per § 92-130.
3. Disconnect G459 harness assembly from CMTX7-LITE transmitter.
4. Remove screws securing N-4-BK clamps to D429-12 angles.
5. Remove screws securing D429-12 angles to D429-16 support assembly and remove transmitter.
6. As required, remove screws securing D429-12 angles to transmitter & remove angles.

B. Installation

1. Refer to Figure 92-1. Turn battery & news equipment switches off, and pull out MWAVE XMIT (5 amp) circuit breaker at panel.
2. As required, install screws securing D429-12 angles to CMTX7-LITE transmitter. Verify security.
3. Install screws securing angles to D429-16 support assembly. Verify security.
4. Install screws securing N-4-BK clamps to angles. Verify security.
5. Connect G459 harness assembly to transmitter. Verify security.
6. Install baggage compartment wall per § 92-130.
7. Push in MWAVE XMIT (5 amp) circuit breaker at panel. Turn battery & news equipment switches on.
8. Perform appropriate post-installation function checks. Turn battery switch off.

C. Scheduled Inspections

Every 100-hour or annual inspection, inspect CMTX7-LITE transmitter for proper installation (refer to R66 Illustrated Parts Catalog Chapter 92) & proper operation per Part B steps 7 and 8.

D. Special Inspections

1. Refer to Figure 92-1. Turn battery & news equipment switches off. Open circuit breaker panel.
2. As required, remove CMTX7-LITE transmitter per Part A. Inspect condition of and verify no obvious damage to transmitter, circuit breaker, and wiring. Verify no loose, chafed, or broken wires or terminals. Verify no evidence of arcing. Verify equipment security.
3. Secure circuit breaker panel. Install transmitter per Part A if removed.

92-184 PA16-series Pod Antenna

A. Removal

1. Refer to Figure 92-1. Turn battery & news equipment switches off, and pull out MWAVE XMIT (5 amp) circuit breaker at panel.
2. Disconnect G459 harness assembly from PA16-series pod antenna and D618-1 amp assembly.
3. Have a second person support pod antenna. Remove screws and washers securing pod antenna to D586 brackets, and remove pod antenna.
4. As required, remove screws securing amp assembly to pod antenna, and remove amp and R5683 thermal pads.
5. Configure helicopter for flight with pod antenna removed per Part E as required.

B. Installation

1. Refer to Figure 92-1. Turn battery & news equipment switches off, and pull out MWAVE XMIT (5 amp) circuit breaker at panel.
2. Configure helicopter for flight with pod antenna installed per Part E as required.
3. If removed, position R5683 thermal pads and D618-1 amp assembly on PA16-series pod antenna and install screws. Verify security.
4. Have a second person support pod antenna. Install screws and washers securing pod antenna to D586 brackets. Verify security.
5. Connect G459 harness assembly to pod antenna and amp assembly. Verify security.
6. Push in MWAVE XMIT (5 amp) circuit breaker at panel. Turn battery & news equipment switches on.
7. Perform appropriate post-installation function checks. Turn battery switch off.

C. Scheduled Inspections

Every 100-hour or annual inspection, inspect PA16-series pod antenna for proper installation (refer to R66 Illustrated Parts Catalog Chapter 92) & proper operation per Part B steps 5 and 6.

D. Special Inspections

1. Refer to Figure 92-1. Turn battery & news equipment switches off. Open circuit breaker panel.
2. As required, remove PA16-series pod antenna per Part A. Inspect condition of and verify no obvious damage to antenna, D586 brackets, circuit breaker, and wiring. Verify no loose, chafed, or broken wires or terminals. Verify no evidence of arcing. Verify equipment security.
3. Secure circuit breaker panel. Install antenna per Part A if removed.

92-184 PA16-series Pod Antenna (continued)

E. Configurations for Flight

1. Configuration for Flight with Pod Antenna Removed

a. Remove PA16-series pod antenna per Part A.

b. Remove hardware securing D586 brackets to F794-2 panel and remove brackets.

c. Install clean, dry plastic bags individually over exposed cable assembly connectors to prevent moisture or debris from contacting connector sockets/pins; secure with ty-raps. Install clean, dry plastic bag over bagged cables/connectors; secure with ty-raps. Verify security.

d. Revise Weight and Balance Record in R66 Pilot's Operating Handbook (POH) Section 6 to incorporate the following data:

Subtract:

Weight	Long. Arm	Long. Moment	Lat. Arm	Lat. Moment
18.1 lb	80.7 in.	1460.7 in.-lb	0 in.	0 in.-lb

2. Configuration for Flight with Pod Antenna Installed

a. Remove and discard ty-raps and plastic bags securing cable assemblies together and ty-raps and bags protecting connectors.

b. Install hardware securing D586 brackets to F794-2 panel. Verify security.

c. Install PA16-series pod antenna per Part B.

d. Revise Weight and Balance Record in R66 Pilot's Operating Handbook (POH) Section 6 to incorporate the following data:

Add:

Weight	Long. Arm	Long. Moment	Lat. Arm	Lat. Moment
18.1 lb	80.7 in.	1460.7 in.-lb	0 in.	0 in.-lb

Intentionally Blank

92-185 GPS-1270FW Antenna

A. Removal

1. Remove tailcone cowling per § 53-23.
2. Refer to Figure 92-1. Remove hardware securing GPS-1270FW antenna to F706-1 cowling assembly and remove antenna. Discard o-ring.

B. Installation

1. Refer to Figure 92-1. Turn battery & news equipment switches off and pull out MWAVE XMIT (5 amp) circuit breaker at panel.
2. Install new o-ring and install hardware securing GPS-1270FW antenna to F706-1 cowling assembly. Verify security.
3. Install tailcone cowling per § 53-23.
4. Push in MWAVE XMIT (5 amp) circuit breaker at panel. Turn battery & news equipment switches on.
5. Perform appropriate post-installation function checks. Turn battery switch off.

C. Scheduled Inspections

Every 100-hour or annual inspection, inspect GPS-1270FW antenna for proper installation (refer to R66 Illustrated Parts Catalog Chapter 92) & proper operation per Part B steps 4 and 5.

D. Special Inspections

1. Refer to Figure 92-1. Turn battery & news equipment switches off. Open circuit breaker panel.
2. As required, remove GPS-1270FW antenna per Part A. Inspect condition of and verify no obvious damage to antenna, circuit breaker, and wiring. Verify no loose, chafed, or broken wires or terminals. Verify no evidence of arcing. Verify equipment security.
3. Secure circuit breaker panel. Install antenna per Part A if removed.

92-190 Antenna Installations

92-191 G457-1 Antenna Installation (Transponder)

A. Schematic

Refer to Figure 98-15 for C804-22 transponder installation wiring diagram.

B. Removal

1. Refer to Figure 92-1. Turn battery & avionics switches off and pull out XPDR (3 amp) circuit breaker at panel.
2. Disconnect G457-2817 cable from engine cowling near right side access door. Remove engine cowling per § 53-21.
3. Using plastic scraper, remove B270-1 sealant from around CI 105-16 transponder antenna at where it attaches to aft cowling.
4. Disconnect antenna cable from antenna at connectors. Remove hardware securing B322-12 doubler and antenna to cowling and remove antenna.

C. Installation

1. Refer to Figure 92-1. Turn battery & avionics switches off and pull out XPDR (3 amp) circuit breaker at panel.
2. Remove paint & primer from between cabin skin and B322-12 plate, and between cabin skin and CI 105-16 transponder antenna to ensure electrical ground.
3. Install hardware securing B322-12 doubler and transponder antenna to mounting plate to aft cowling. Verify security.
4. Apply small bead of B270-1 sealant (0.1 inch max in height) around antenna (exterior only) where it attaches to aft cowling.
5. Connect antenna cable to antenna at connectors; verify security.
6. Install engine cowling per § 53-21.
7. Push in XPDR (3 amp) circuit breaker at panel. Turn battery & avionics switches on.
8. Perform appropriate functional checks per Garmin GTX 345 Pilot's Guide. Turn battery & avionics switches off.

D. Scheduled Inspections

Every 100-hour or annual inspection, inspect CI 105-16 transponder antenna for proper installation (refer to R66 Illustrated Parts Catalog Chapter 92) & proper operation per Part C steps 7 and 8.

92-191 G457-1 Antenna Installation (Transponder; continued)

E. Special Inspections

1. Refer to Figure 92-1. Turn battery & news equipment switches off. Open circuit breaker panel.
2. As required, remove CI 105-16 transponder antenna per Part A. Inspect condition of and verify no obvious damage to antenna, circuit breaker, and wiring. Verify no loose, chafed, or broken wires or terminals. Verify no evidence of arcing. Verify equipment security.
3. Secure circuit breaker panel. Install antenna per Part A if removed.

92-192 G457-2 Antenna Installation (TV Tuner)

A. Schematic

Refer to Figure 92-13 for G491 TV receiver provision installation electrical schematic.

B. Removal

1. Refer to Figure 92-1. Turn battery & news equipment switches off and pull out TV TUNER (2 amp) circuit breaker at panel.
2. Using plastic scraper, remove B270-1 sealant from around CI 273 TV tuner antenna where it attaches to cabin skin.
3. Remove screws securing B322-11 plate to cabin skin and remove plate with antenna attached. Disconnect antenna cable from antenna at connectors.
4. Disassemble antenna from plate as required.

C. Installation

1. Refer to Figure 92-1. Turn battery & news equipment switches off and pull out TV TUNER (2 amp) circuit breaker at panel.
2. Remove paint & primer from between cabin skin and B322-11 plate to ensure electrical ground.
3. Assemble CI 273 TV tuner antenna on B322-11 plate as required. Verify security.
4. Connect antenna cable to antenna at connectors. Install screws securing plate to cabin skin. Verify security.
5. Apply small bead of B270-1 sealant around antenna (exterior only) where it attaches to cabin skin.
6. Push in TV TUNER (2 amp) circuit breaker at panel. Turn battery & news equipment switches on.
7. Perform appropriate functional checks per TV tuner manufacturer's instructions. Turn battery & news equipment switches off.

92-192 G457-2 Antenna Installation (TV Tuner; continued)

D. Scheduled Inspections

Every 100-hour or annual inspection, inspect CI 273 TV tuner antenna for proper installation (refer to R66 Illustrated Parts Catalog Chapter 92) & proper operation per Part C steps 6 and 7.

E. Special Inspections

1. Refer to Figure 92-1. Turn battery & news equipment switches off. Open circuit breaker panel.
2. As required, remove CI 273 TV tuner antenna per Part A. Inspect condition of and verify no obvious damage to antenna, circuit breaker, and wiring. Verify no loose, chafed, or broken wires or terminals. Verify no evidence of arcing. Verify equipment security.
3. Secure circuit breaker panel. Install antenna per Part A if removed.

92-193 G457-3 Antenna Installation (Scanner)

A. Schematic

Refer to Figure 92-11 for G489 scanner installation wiring diagram.

B. Removal

1. Refer to Figure 92-1. Turn battery & news equipment switches off and pull out SCANNER (2 amp) circuit breaker at panel.
2. Remove G13000 audio system router per § 92-253.
3. Disconnect antenna cable from CI 285 antenna at connectors.
4. Supporting antenna and B322-14 plate, remove screws securing antenna and plate to cabin skin and remove antenna and plate.

C. Installation

1. Refer to Figure 92-1. Turn battery & news equipment switches off and pull out SCANNER (2 amp) circuit breaker at panel.
2. Remove paint & primer from between cabin skin and CI 285 antenna to ensure electrical ground.
3. Supporting antenna and B322-14 plate, install screws securing antenna and plate to cabin skin. Verify security.
4. Connect antenna cable to antenna at connectors.
5. Install G13000 audio system router per § 92-253.

92-193 G457-3 Antenna Installation (Scanner; continued)

C. Installation (continued)

6. Apply small bead of B270-1 sealant (0.1 inch max in height) around antenna (exterior only) where it attaches to cabin skin.
7. Push in SCANNER (2 amp) circuit breaker at panel. Turn battery & news equipment switches on.
8. Perform appropriate functional checks per Uniden Scanners User's Guide. Turn battery & news equipment switches off.

D. Scheduled Inspections

Every 100-hour or annual inspection, inspect CI 285 antenna for proper installation (refer to R66 Illustrated Parts Catalog Chapter 92) & proper operation per Part C steps 7 and 8.

E. Special Inspections

1. Refer to Figure 92-1. Turn battery & news equipment switches off. Open circuit breaker panel.
2. As required, remove CI 285 antenna per Part A. Inspect condition of and verify no obvious damage to antenna, circuit breaker, and wiring. Verify no loose, chafed, or broken wires or terminals. Verify no evidence of arcing. Verify equipment security.
3. Secure circuit breaker panel. Install antenna per Part A if removed.

92-200 G470-1 Aft Console Installation

The G470-1 aft console installation is a sheet metal console installed in place of the F931-1 (middle) aft seat assembly, reducing maximum number of occupants to 4. The aft console contains equipment and controls used by the camera operator.

92-210 G487-1 FM Transceivers Installation

A. Description

FM transceiver #1 is mounted in the lower instrument panel, and FM transceivers #2 and #3 are mounted in the rear equipment console. All 3 transceivers are selectable from any of the three main audio control panels.

B. Schematic

Refer to Figure 92-10 for G487-1 FM transceivers installation wiring diagram.

92-210 G487-1 FM Transceivers Installation (continued)

C. Removal

1. Refer to Figure 92-1. Turn battery & news equipment switches off and pull out FM2 (10 amp) and FM3 (10 amp) circuit breakers at panel.
2. Remove screws securing G472 face to G471 panels.
3. Disconnect G459 harness assembly from A824 transceiver(s).
4. Supporting transceiver(s), remove hardware securing B344-25 angle assemblies to face and transceiver(s). Remove angles and transceiver(s).

D. Installation

1. Refer to Figure 92-1. Turn battery & news equipment switches off and pull out FM2 (10 amp) and FM3 (10 amp) circuit breakers at panel.
2. Supporting A824 transceiver(s), install hardware securing B344-25 angle assemblies to face and transceiver(s). Verify security.
3. Install screws securing G472 face to G471 panels.
4. Connect G459 harness assembly to transceiver(s).
5. Push in FM2 (10 amp) and FM3 (10 amp) circuit breakers at panel. Turn battery & news equipment switches on.
6. Perform appropriate functional checks per Kenwood TK-7180/TK-8180 VHF FM / UHF FM Transceiver Instruction Manual. Turn battery & new equipment switches off.

E. Scheduled Inspections

Every 100-hour or annual inspection, inspect A824 transceiver(s) for proper installation (refer to R66 Illustrated Parts Catalog Chapter 92) & proper operation per Part D steps 5 and 6.

F. Special Inspections

1. Refer to Figure 92-1. Turn battery & news equipment switches off. Open circuit breaker panel.
2. As required, remove A824 transceiver(s) per Part A. Inspect condition of and verify no obvious damage to transceiver(s), circuit breaker, and wiring. Verify no loose, chafed, or broken wires or terminals. Verify no evidence of arcing. Verify equipment security.
3. Secure circuit breaker panel. Install transceiver(s) per Part A if removed.

92-220 G489-1 Scanner Installation

A. Description

A multi-band scanner may be installed in place of the AM/FM receiver and is selectable from any of the three main audio control panels.

B. Schematic

Refer to Figure 92-11 for G489 scanner installation wiring diagram.

C. Removal

1. Refer to Figure 92-1. Turn battery & news equipment switches off and pull out SCANNER (2 amp) circuit breaker at panel.
2. Remove screws securing G472 face to G471 panels.
3. Disconnect G459 harness assembly from scanner.
4. Supporting BCD996XT scanner, remove hardware securing D344-19 angle assemblies to face and scanner. Remove angles and scanner.

D. Installation

1. Refer to Figure 92-1. Turn battery & news equipment switches off and pull out SCANNER (2 amp) circuit breaker at panel.
2. Supporting BCD996XT scanner, install hardware securing D344-19 angle assemblies to face and scanner. Verify security.
3. Connect G459 harness assembly to scanner. Verify security.
4. Install screws securing G472 face to G471 panels.
5. Push in SCANNER (2 amp) circuit breaker at panel. Turn battery & news equipment switches on.
6. Perform appropriate functional checks per Uniden Scanners User's Guide. Turn battery & new equipment switches off.

E. Scheduled Inspections

Every 100-hour or annual inspection, inspect BCD996XT scanner for proper installation (refer to R66 Illustrated Parts Catalog Chapter 92) & proper operation per Part D steps 5 and 6.

F. Special Inspections

1. Refer to Figure 92-1. Turn battery & news equipment switches off. Open circuit breaker panel.
2. As required, remove BCD996XT scanner per Part A. Inspect condition of and verify no obvious damage to scanner, circuit breaker, and wiring. Verify no loose, chafed, or broken wires or terminals. Verify no evidence of arcing. Verify equipment security.
3. Secure circuit breaker panel. Install scanner per Part A if removed.

92-230 G490-1 Talent Light Installation

A. Description

The forward talent light is mounted on the left side of the instrument console and is used to illuminate the left front seat occupant (typically a reporter) during broadcasts in low-light conditions. Beam elevation is adjustable via a friction mount. The aft talent light is mounted on top of the center-cabin camera and is used to illuminate rear seat areas as desired. The forward light is controlled by a toggle switch on the rear equipment console, and the aft light is controlled by a switch on the light itself.

B. Schematic

Refer to Figure 92-12 for G490-1 talent light installation wiring diagram.

92-231 D553-1 (Forward Talent) Light Assembly

A. Lamp Replacement

1. Refer to Figure 92-1. Turn battery & news equipment switches off and pull out TALENT LTS (3 amp) circuit breaker at panel.
2. Supporting D553-1 light assembly, remove hardware securing light assembly to D566-10 bracket.
3. Holding light assembly vertically, unscrew D553-3 housing from D566-9 cap and remove housing and D566-5 lens.
4. Unplug L517A lamp from H8841 holder. Replace lamp as required and reassemble (frosted side of D566-5 lens toward lamp). Verify security.
5. Push in TALENT LTS (3 amp) circuit breaker at panel. Turn battery & news equipment switches on. Verify talent light switches on and off using switch.

B. Scheduled Inspections

Every 100-hour or annual inspection, inspect D553-1 light assembly for proper installation (refer to R66 Illustrated Parts Catalog Chapter 92) & proper operation per Part A step 5.

92-232 ILED-MA (Aft Talent) Light

A. Removal

1. Refer to Figure 92-1. Turn battery & news equipment switches off and pull out TALENT LTS (3 amp) circuit breaker at panel.
2. Unplug mini USB cable from ILED-MA light.
3. Using backup wrench on lower 91819A110 nut, loosen upper 91819A110 nut securing light to 90322A645 stud; unscrew light off of stud.

B. Installation

1. Refer to Figure 92-1. Turn battery & news equipment switches off and pull out TALENT LTS (3 amp) circuit breaker at panel.
2. Using backup wrench on lower 91819A110 nut, screw ILED-MA light onto 90322A645 stud; tighten upper 91819A110 nut securing light to stud. Verify security.
3. Plug in mini USB cable to light.
4. Push in TALENT LTS (3 amp) circuit breaker at panel. Turn battery & news equipment switches on. Verify talent light switches on and off using switch.

C. Scheduled Inspections

Every 100-hour or annual inspection, inspect ILED-MA light for proper installation (refer to R66 Illustrated Parts Catalog Chapter 92) & proper operation per Part B step 4.

92-240 G491 TV Receiver Provision Installation

A. Description

Refer to Figure 92-1. The TV tuner is mounted in the rear equipment console and is used to select television broadcasts to be displayed on the monitors. A second tuner is optional.

B. Schematic

Refer to Figure 92-13 for G491 TV receiver provision installation wiring diagram.

92-241 Distribution Amp

A. Removal

1. Refer to Figure 92-1. Turn battery & news equipment switches off and pull out TV TUNER (2 amp) circuit breaker at panel.
2. Remove screws securing G472 face to G471 panels.
3. Supporting 11-911-102 distribution amp(s), remove screws securing amp(s) to aft console assembly. Disconnect G459 harness assembly from amp(s).

B. Installation

1. Refer to Figure 92-1. Turn battery & news equipment switches off and pull out TV TUNER (2 amp) circuit breaker at panel.
2. Connect G459 harness assembly to 11-911-102 distribution amp(s). Verify security.
3. Install screws securing amp(s) to aft console assembly. Verify security.
4. Install screws securing G472 face to G471 panels.
5. Push in TV TUNER (2 amp) circuit breaker at panel. Turn battery & news equipment switches on.
6. Perform appropriate functional checks per TV receiver manufacturer’s instructions (manufacturer’s may vary due to regional requirements). Turn battery & new equipment switches off.

C. Scheduled Inspections

Every 100-hour or annual inspection, inspect 11-911-102 distribution amp(s) for proper installation (refer to R66 Illustrated Parts Catalog Chapter 92) & proper operation per Part B steps 5 and 6.

D. Special Inspections

1. Refer to Figure 92-1. Turn battery & news equipment switches off. Open circuit breaker panel.
2. As required, remove 11-911-102 distribution amp(s) per Part A. Inspect condition of and verify no obvious damage to distribution amp(s), circuit breaker, and wiring. Verify no loose, chafed, or broken wires or terminals. Verify no evidence of arcing. Verify equipment security.
3. Secure circuit breaker panel. Install distribution amp(s) per Part A if removed.

92-242 Digital TV Receiver

A. Removal

1. Refer to Figure 92-1. Turn battery & news equipment switches off and pull out TV TUNER (2 amp) circuit breaker at panel.
2. Remove screws securing G472 face to G471 panels.
3. Disconnect G459 harness assembly from CTDVBT-288X digital TV receiver(s).
4. Remove screws securing receiver(s) to and remove receiver(s).

B. Installation

1. Refer to Figure 92-1. Turn battery & news equipment switches off and pull out TV TUNER (2 amp) circuit breaker at panel.
2. Install screws securing CTDVBT-288X digital TV receiver(s) to F463-1 cover assembly. Verify security.
3. Connect G459 harness assembly to receiver(s). Verify security.
4. Install screws securing G472 face to G471 panels. Verify security.
5. Push in TV TUNER (2 amp) circuit breaker at panel. Turn battery & news equipment switches on.
6. Perform appropriate functional checks per TV receiver manufacturer’s instructions (manufacturer’s may vary due to regional requirements). Turn battery & new equipment switches off.

C. Scheduled Inspections

Every 100-hour or annual inspection, inspect CTDVBT-288X digital TV receiver(s) for proper installation (refer to R66 Illustrated Parts Catalog Chapter 92) & proper operation per Part B steps 5 and 6.

D. Special Inspections

1. Refer to Figure 92-1. Turn battery & news equipment switches off. Open circuit breaker panel.
2. As required, remove CTDVBT-288X digital TV receiver(s) per Part A. Inspect condition of and verify no obvious damage to receiver(s), circuit breaker, and wiring. Verify no loose, chafed, or broken wires or terminals. Verify no evidence of arcing. Verify equipment security.
3. Secure circuit breaker panel. Install receiver(s) per Part A if removed.

92-250 G492-1 Audio System Installation

A. Description

The audio system consists of four audio control panels and an audio junction box. The audio junction box is located beneath the right rear seat. Power is supplied via a 5-amp circuit breaker in the main circuit breaker panel on the left hand side of the aircraft. Power to the audio system is not disconnected by the news equipment master switch.

The pilot's audio panel is located on the accessory bar in front of the pilot's seat. Push buttons are used to select a primary (transmit and monitor) audio component. Green LEDs indicate which audio component is currently selected as primary. Additional components may be monitored by selecting their toggle switches up. Sliders control volume level for each component being monitored.

Intercom control is at the far right of the audio panel. Toggle switch down isolates the pilot from the intercom. With the toggle switch up, the ICS slider controls volume, and the VOX slider (adjacent to the left) controls voice-activation threshold. VOX slider full down is maximum threshold (keyed intercom). Pushing the ICS push-button (illuminating the green LED) provides hot mic regardless of VOX slider position.

The first detent of the pilot's trigger switch is the intercom key. The second detent transmits on the #1 VHF communications radio regardless of audio panel configuration. The audio panel transmit thumb button transmits on the panel-selected audio component.

A toggle switch to the left of the pilot's audio panel may be used to bypass the audio system and connect the pilot directly to Com 1. This mode is automatically engaged in the event of an audio system power failure. (The transmit indicator on the radio display can be used to verify transmission.)

The left front seat audio panel operates in the same manner as the pilot's audio panel but is not connected to the bypass toggle switch. The first detent of the copilot's trigger switch is the intercom key, and the second detent transmits on the panel-selected audio component. A handheld transmit switch has been added for use when the left cyclic grip is removed.

The left front seat audio panel also controls the audio configuration for the right rear seat.

The left rear seat audio panel is connected to the left rear seat headset jack. The laptop camera controller contains intercom and transmit switches for the camera operator.

The microwave audio panel controls which signals are sent to the microwave transmitter and video recorder. Selecting the toggle switch up for a component sends its signal to the transmitter. Push buttons are not functional on this panel.

B. Schematic

Refer to Figure 92-14 for G492-1 audio system installation wiring diagram.

92-251 Forward Audio Panels

A. Removal

1. Remove forward monitor(s) per § 92-160.
2. Refer to Figure 92-1. Turn battery & news equipment switches off, and pull out AUDIO PANEL (5 amp) circuit breaker at panel.
3. Remove hardware securing G11431-00102-1 audio panel(s) to G474 bracket assembly.
4. Disconnect G459 harness assembly from audio panel(s) and remove panel(s).

B. Installation

1. Refer to Figure 92-1. Turn battery & news equipment switches off, and pull out 7″ MONS (2 amp) and AUDIO PANEL (5 amp) circuit breakers at panel.
2. Connect G459 harness assembly to G11431-00102-1 audio panel(s). Verify security.
3. Install hardware securing audio panel(s) to G474 bracket assembly. Verify security.
4. Install forward (monitor(s) per § 92-160.
5. Push in 7″ MONS (2 amp) and AUDIO PANEL (5 amp) circuit breakers at panel.
6. Perform appropriate functional checks per Geneva Aviation user guide. Turn battery & news equipment switches off.

C. Scheduled Inspections

Every 100-hour or annual inspection, inspect G11431-00102-1 audio panel(s) for proper installation (refer to R66 Illustrated Parts Catalog Chapter 92) & proper operation per Part B steps 5 and 6.

D. Special Inspections

1. Refer to Figure 92-1. Turn battery & news equipment switches off. Open circuit breaker panel.
2. As required, remove G11431-00102-1 audio panel(s) per Part A. Inspect condition of and verify no obvious damage to audio panel(s), G474 bracket assemblies, circuit breaker, and wiring. Verify no loose, chafed, or broken wires or terminals. Verify no evidence of arcing. Verify equipment security.
3. Secure circuit breaker panel. Install audio panel(s) per Part A if removed.

92-252 Aft Console Audio Panels

A. Removal

1. Refer to Figure 92-1. Turn battery & news equipment switches off, and pull out AUDIO PANEL (5 amp) circuit breaker at panel.
2. Remove face screws securing G11431-00102 audio panel(s) to D344-4 angle assemblies and lift audio panel from console.
3. Disconnect G459 harness assembly from audio panel(s) and remove panel(s).
4. As required, remove hardware securing D557-4 cover assemblies from audio panels and remove covers.

B. Installation

1. Refer to Figure 92-1. Turn battery & news equipment switches off, and pull out AUDIO PANEL (5 amp) circuit breaker at panel.
2. If removed, install hardware securing D557-4 cover assemblies to G11431-00102-1 audio panel(s) and install covers.
3. Connect G459 harness assembly to audio panel(s). Verify security.
4. Position audio panel(s) in console and install face screws securing audio panel(s) to D344-4 angle assemblies. Verify security.
5. Push in AUDIO PANEL (5 amp) circuit breaker at panel.
6. Perform appropriate functional checks per Geneva Aviation user guide. Turn battery & news equipment switches off.

C. Scheduled Inspections

Every 100-hour or annual inspection, inspect G11431-00102-1 audio panel(s) for proper installation (refer to R66 Illustrated Parts Catalog Chapter 92) & proper operation per Part B steps 5 and 6.

D. Special Inspections

1. Refer to Figure 92-1. Turn battery & news equipment switches off. Open circuit breaker panel.
2. As required, remove G11431-00102-1 audio panel(s) per Part A. Inspect condition of and verify no obvious damage to audio panel(s), circuit breaker, and wiring. Verify no loose, chafed, or broken wires or terminals. Verify no evidence of arcing. Verify equipment security.
3. Secure circuit breaker panel. Install audio panel(s) per Part A if removed.

92-253 Digital Router

A. **Removal**

1. Refer to Figure 92-1. Turn battery & news equipment switches off, and pull out AUDIO PANEL (5 amp) circuit breaker at panel.
2. Lift aft right seat forward. Remove or loosen screws securing G459 harness assembly to G13000 router.
3. Remove screws and C130-51 spacers securing router to F387-1 (belly) skin and remove router.

B. **Installation**

1. Refer to Figure 92-1. Turn battery & news equipment switches off, and pull out AUDIO PANEL (5 amp) circuit breaker at panel.
2. Lift aft right seat forward. Install screws and C130-51 spacers securing G13000 router to F387-1 (belly skin). Verify security.
3. Install or tighten screws securing G459 harness assembly to router. Verify security.
4. Push in AUDIO PANEL (5 amp) circuit breaker at panel.
5. Perform appropriate functional checks per Geneva Aviation user guide. Turn battery & news equipment switches off.

C. **Scheduled Inspections**

Every 100-hour or annual inspection, inspect G13000 router for proper installation (refer to R66 Illustrated Parts Catalog Chapter 92) & proper operation per Part B steps 4 and 5.

D. **Special Inspections**

1. Refer to Figure 92-1. Turn battery & news equipment switches off. Open circuit breaker panel.
2. As required, remove G13000 router per Part A. Inspect condition of and verify no obvious damage to router, circuit breaker, and wiring. Verify no loose, chafed, or broken wires or terminals. Verify no evidence of arcing. Verify equipment security.
3. Secure circuit breaker panel. Install router per Part A if removed.

92-260 G493-1 Video Components Installation

A. Description

The video switcher is located in the rear equipment console and is used to select the video signal source (nose camera, video recorder playback, or micro cameras). The signal is then routed to the monitors, microwave transmitter, and video recorder.

B. Schematic

Refer to Figure 92-15 for G493-1 video components wiring diagram.

C. Removal

1. Refer to Figure 92-1. Turn battery & news equipment switches off and pull out VID SW (2 amp) circuit breaker at panel.
2. Remove screws securing G472 face to G471 panels and remove face.
3. Supporting component(s), remove screws securing BENXT430X video router or RH-AB video switch to G470-1 console assembly, as required.
4. Supporting component(s), disconnect G459 harness assembly from video router or video switch as required and remove component.

D. Installation

1. Refer to Figure 92-1. Turn battery & news equipment switches off and pull out VID SW (2 amp) circuit breaker at panel.
2. Connect G459 harness assembly to BENXT430X video router or RH-AB video switch, as required.
3. Install screws securing video router or video switch to G470-1 console assembly, as required. Verify security.
4. Install screws securing G472 face to G471 panels. Verify security.
5. Push in VID SW (2 amp) circuit breaker at panel. Turn battery & news equipment switches on.
6. Perform appropriate functional checks per Ensemble Designs BrightEye NXT Routers 430 Guide. Turn battery & news equipment switches off.

E. Scheduled Inspections

Every 100-hour or annual inspection, inspect BENXT430X video router and RH-AB video switch for proper installation (refer to R66 Illustrated Parts Catalog Chapter 92) & proper operation per Part D steps 5 and 6.

92-260 G493-1 Video Components Installation (continued)

F. Special Inspections

1. Refer to Figure 92-1. Turn battery & news equipment switches off. Open circuit breaker panel.
2. As required, remove BENXT430X video router and RH-AB video switch per Part A. Inspect condition of and verify no obvious damage to video router, video switch, circuit breaker, and wiring. Verify no loose, chafed, or broken wires or terminals. Verify no evidence of arcing. Verify equipment security.
3. Secure circuit breaker panel. Install video router and video switch per Part A if removed.

92-270 G496-1 DVR Installation

A. Description

The video recorder is located on the cross tube between the front seatbacks and has a built-in monitor and controls.

B. Schematic

Refer to Figure 92-16 for G496-1 DVR installation wiring diagram.

C. Removal

1. Refer to Figure 92-1. Turn battery & news equipment switches off and pull out DVR (2 amp) circuit breaker at panel.
2. Disconnect G459 harness assembly from ODYSSEY7Q or ODYSSEY7QPLUS monitor/recorder.
3. Supporting monitor/recorder, remove hardware securing monitor/recorder to G474-3 bar and remove monitor/recorder.

D. Installation

1. Refer to Figure 92-1. Turn battery & news equipment switches off and pull out DVR (2 amp) circuit breaker at panel.
2. Install hardware securing ODYSSEY7Q or ODYSSEY7QPLUS monitor/recorder to G474-3 bar. Verify security.
3. Connect G459 harness assembly to monitor/recorder. Verify security.
4. Push in DVR (2 amp) circuit breaker at panel. Turn battery & news equipment switches on.
5. Perform appropriate functional checks per Convergent Design Odyssey 7Q+ User Manual. Turn battery & news equipment switches off.

92-270 G496-1 DVR Installation (continued)

E. Scheduled Inspections

Every 100-hour or annual inspection, inspect ODYSSEY7Q or ODYSSEY7QPLUS monitor/recorder for proper installation (refer to R66 Illustrated Parts Catalog Chapter 92) & proper operation per Part D steps 4 and 5.

F. Special Inspections

1. Refer to Figure 92-1. Turn battery & news equipment switches off. Open circuit breaker panel.
2. As required, remove ODYSSEY7Q or ODYSSEY7QPLUS monitor/recorder per Part A. Inspect condition of and verify no obvious damage to monitor/recorder, circuit breaker, and wiring. Verify no loose, chafed, or broken wires or terminals. Verify no evidence of arcing. Verify equipment security.
3. Secure circuit breaker panel. Install monitor/recorder per Part A if removed.

92-280 Aux Electrical System Installation

An additional circuit breaker panel on the ledge just forward of the pilot's seat contains all circuit breakers for ENG equipment. The forward row of circuit breakers is a 28-volt bus and the aft row is a 14-volt bus. A 28 to 14-volt converter powers the 14-volt bus. The news equipment master switch on the left side of the panel controls power to all ENG equipment.

NOTE

ENG circuit breaker panel will not be powered by news equipment master switch unless avionics switch is also on.

92-285 D301 Ballast Installation

CAUTION

Altering fixed ballast can appreciably affect helicopter center of gravity (CG).

CAUTION

Maximum allowable empennage ballast is 21.00 lb on E.N.G Versions. One upper and one lower weight are required. Available combinations provide total weight of 3, 6, 9, 12, 15, & 21 lb.

Refer to Chapter 8-00 for weight and balance information.

Intentionally Blank

92-290 Wiring Diagrams

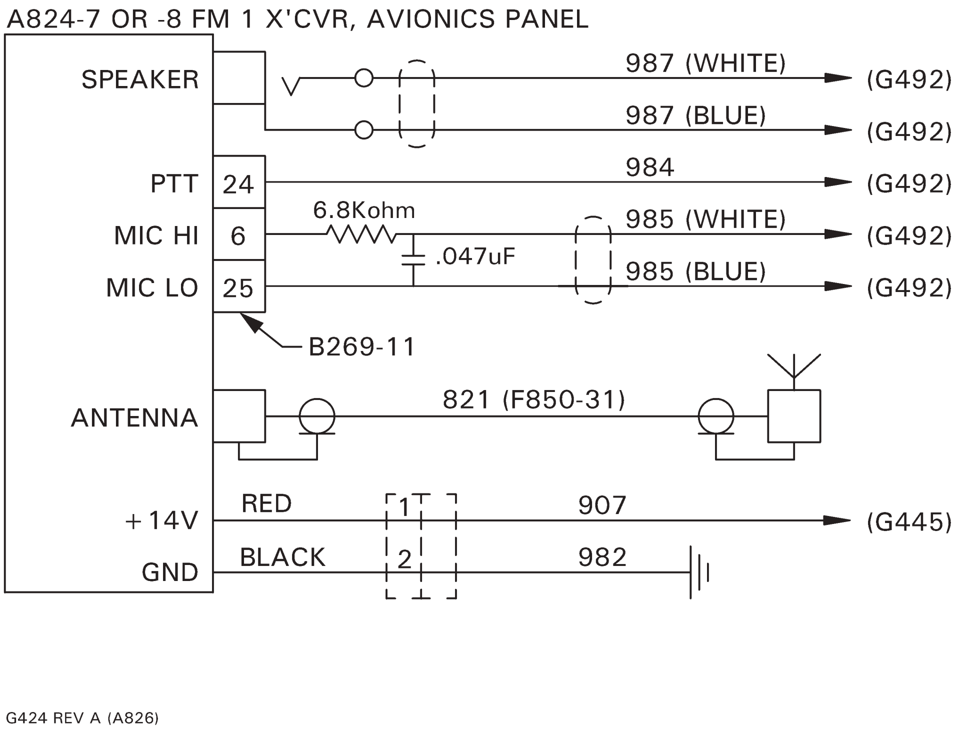

FIGURE 92-3 A826-18 TRANSCEIVER INSTALLATION (FM1) WIRING DIAGRAM

92-290 Wiring Diagrams (continued)

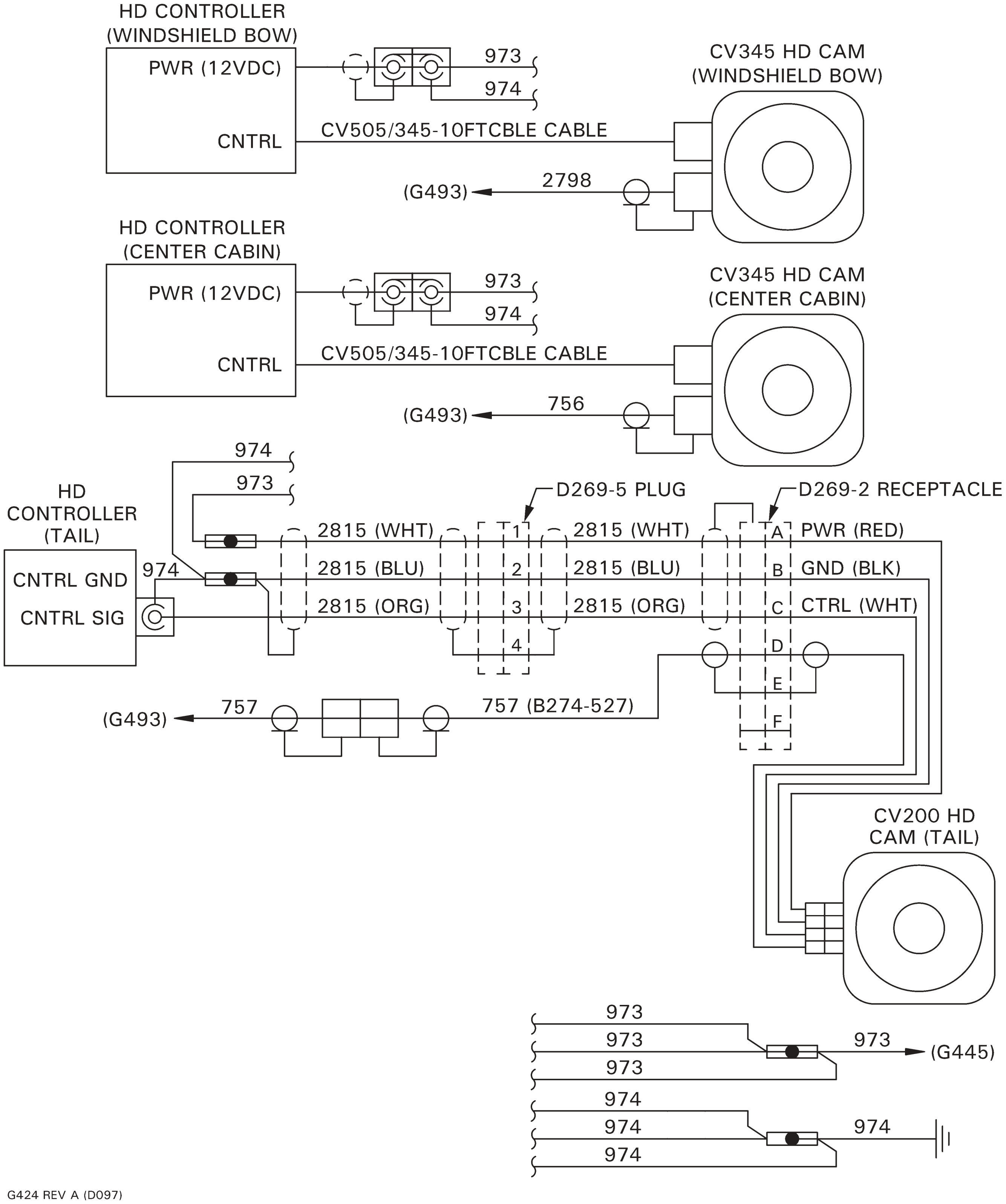

FIGURE 92-4 D097 HD MICRO CAMERA INSTALLATION WIRING DIAGRAM

92-290 Wiring Diagrams (continued)

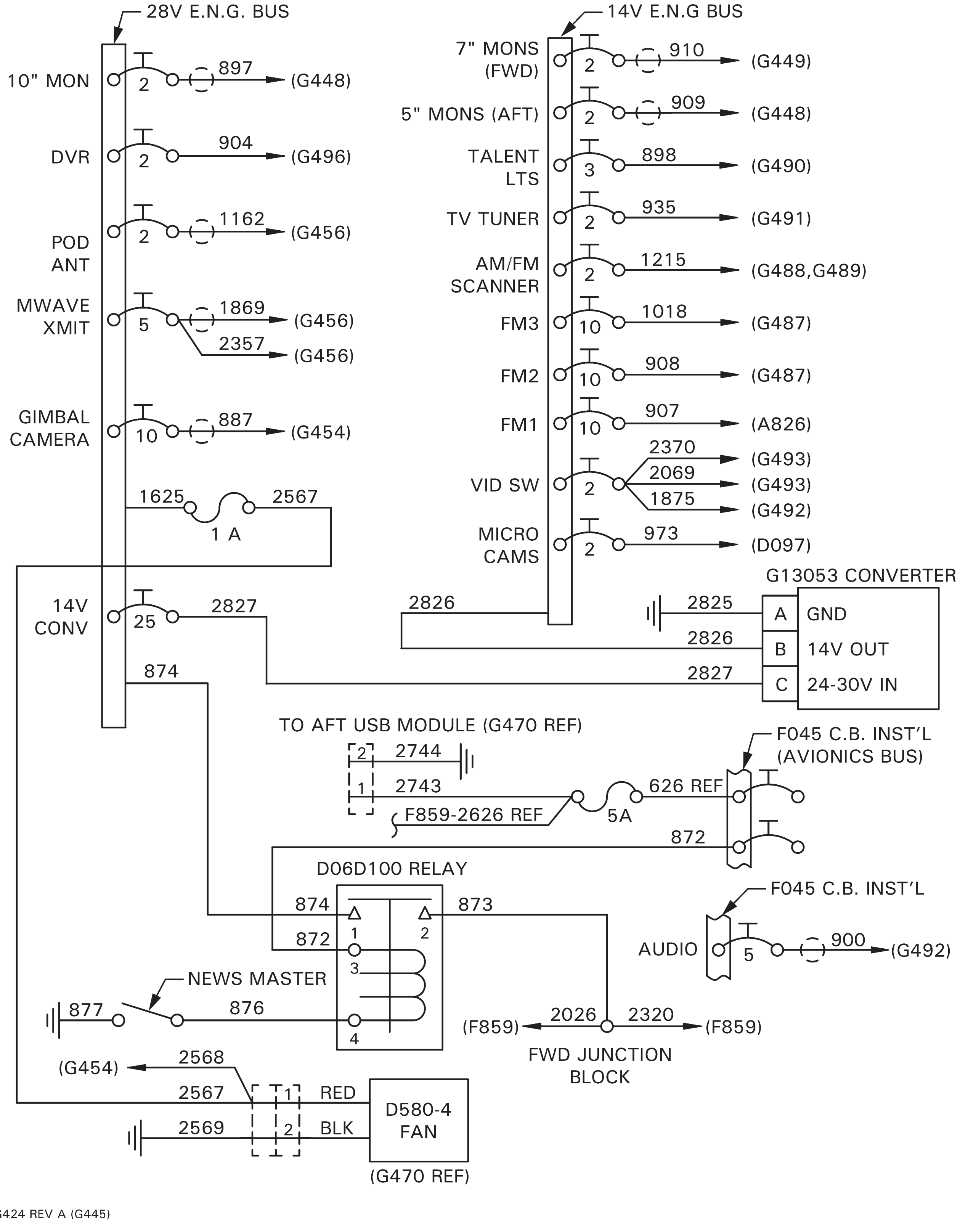

FIGURE 92-5 G445-2 AUX CIRCUIT BREAKER PANEL INSTALLATION WIRING DIAGRAM

92-290 Wiring Diagrams (continued)

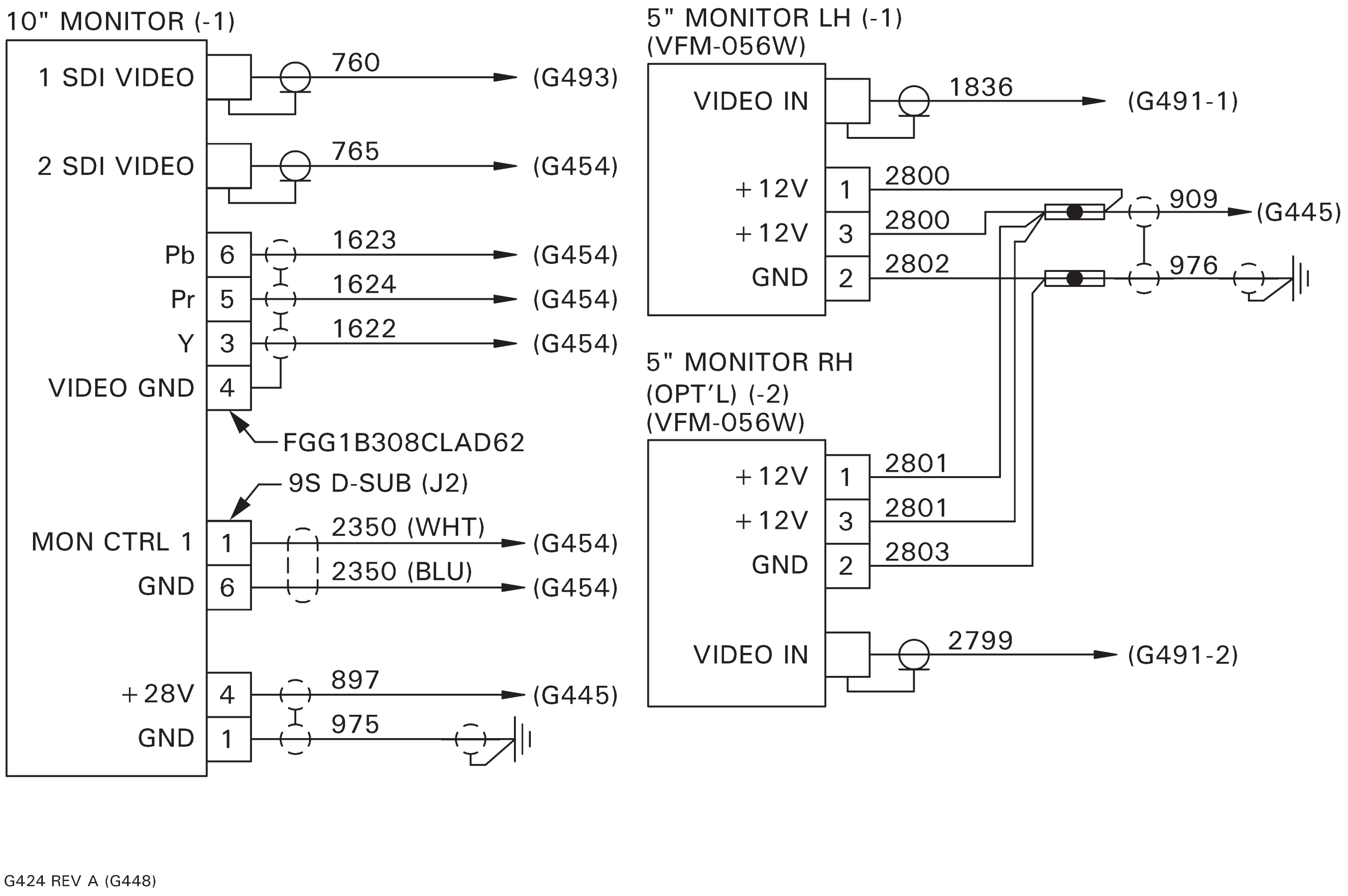

FIGURE 92-6 G448 AFT MONITORS INSTALLATION WIRING DIAGRAM

92-290 Wiring Diagrams (continued)

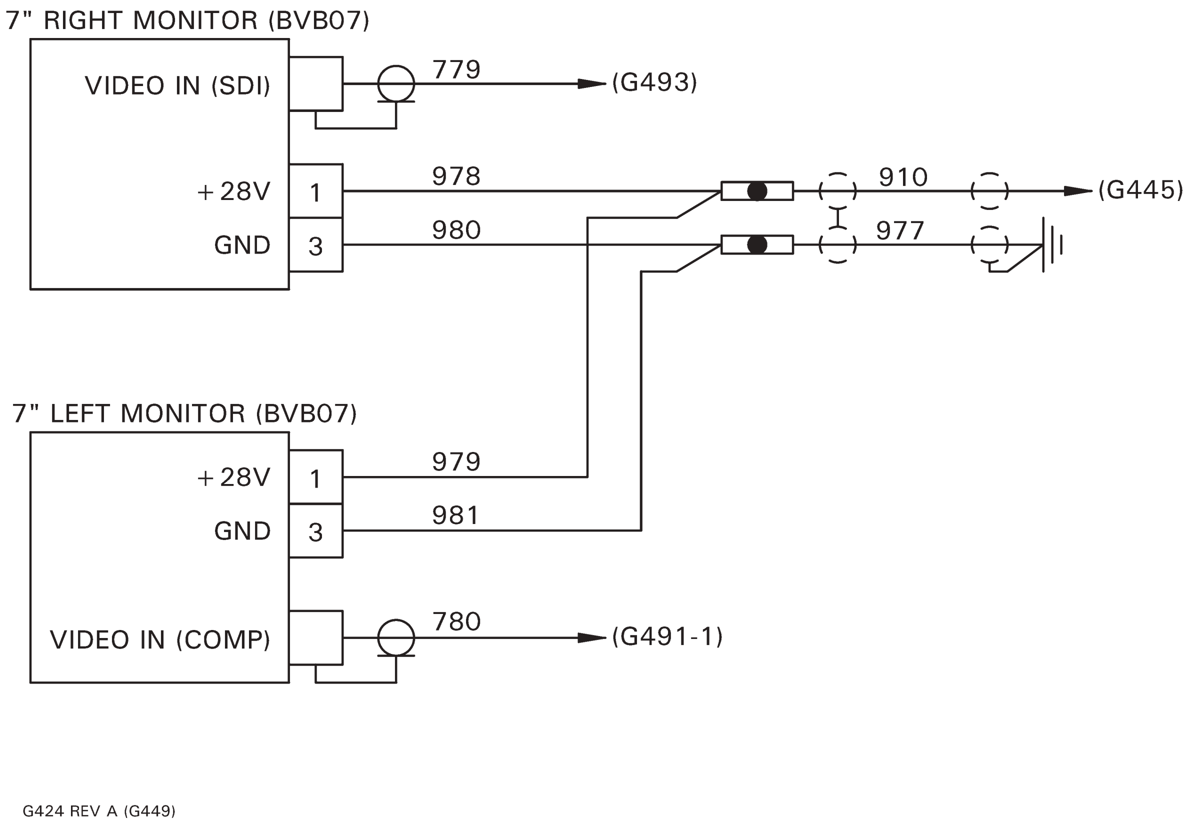

FIGURE 92-7 G449 FORWARD MONITORS INSTALLATION WIRING DIAGRAM

Intentionally Blank

92-280 Wiring Diagrams (continued)

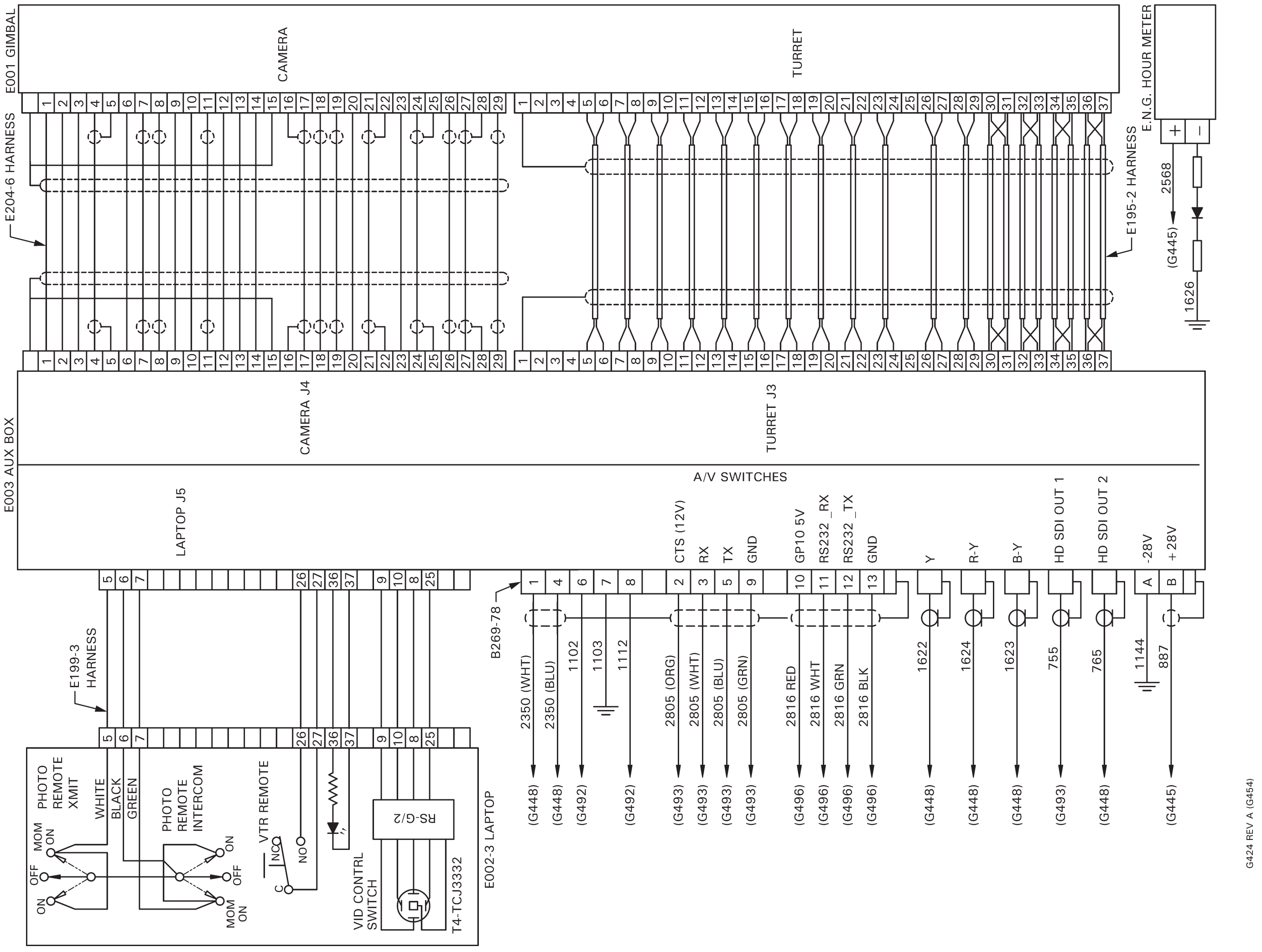

FIGURE 92-8 G454-1 CAMERA SYSTEM INSTALLATION WIRING DIAGRAM

Intentionally Blank

92-290 Wiring Diagrams (continued)

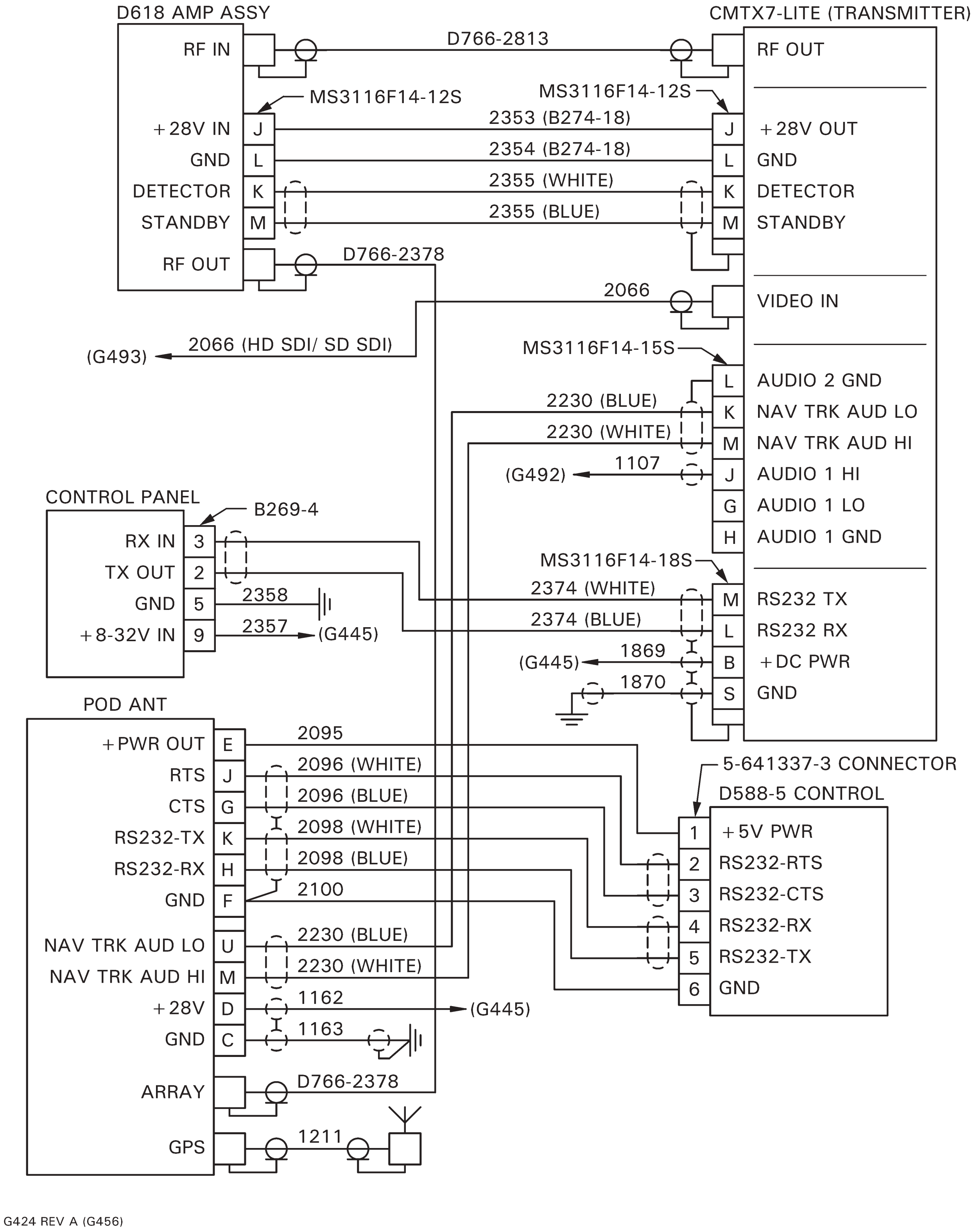

FIGURE 92-9 G456-1 MICROWAVE SYSTEM INSTALLATION WIRING DIAGRAM

92-290 Wiring Diagrams (continued)

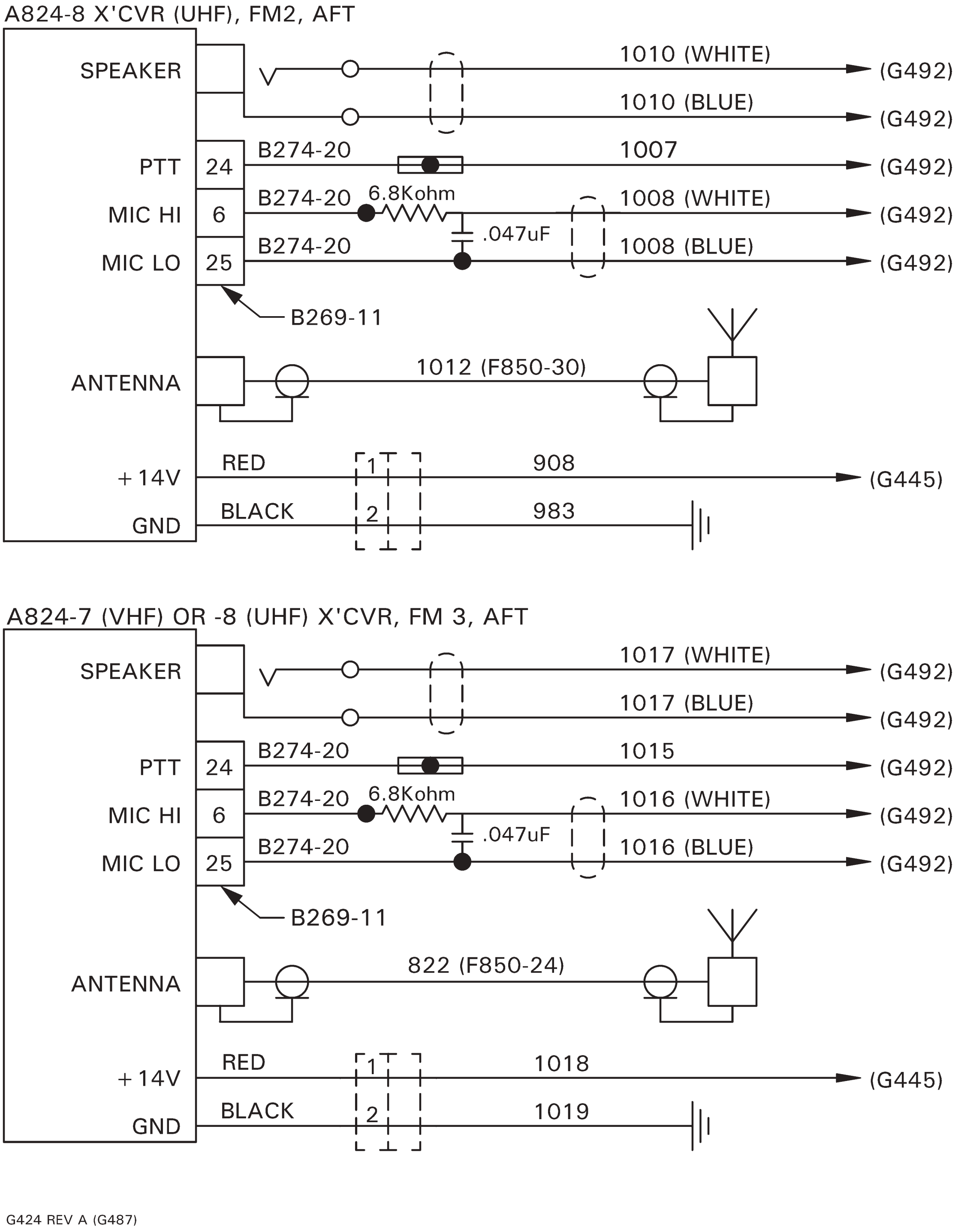

FIGURE 92-10 G487-1 FM TRANSCEIVERS INSTALLATION WIRING DIAGRAM

92-290 Wiring Diagrams (continued)

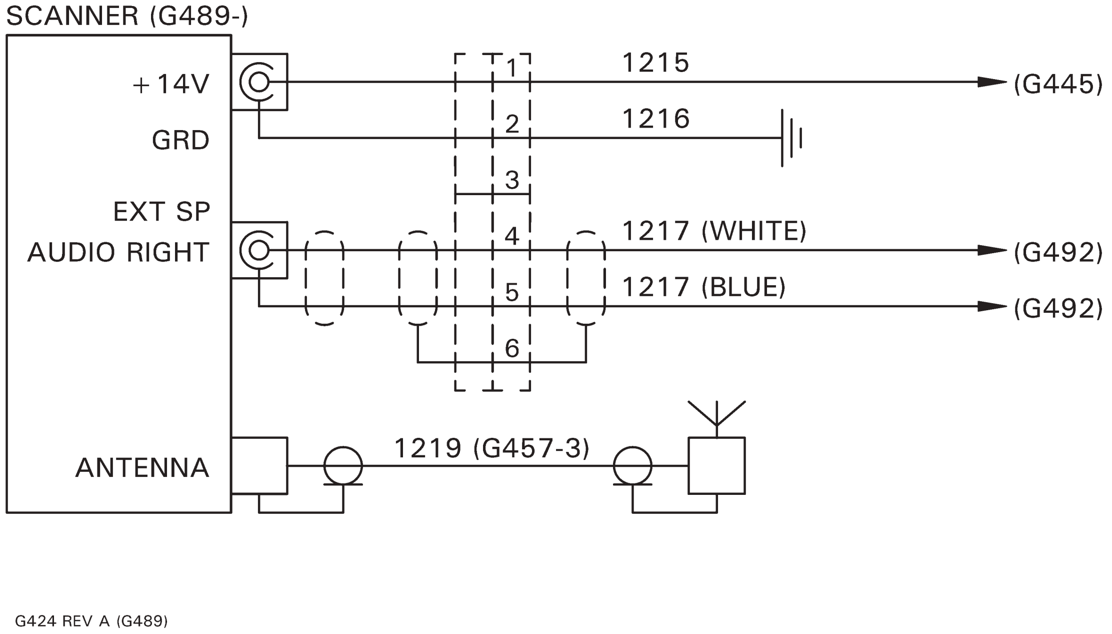

FIGURE 92-11 G489 SCANNER INSTALLATION WIRING DIAGRAM

92-290 Wiring Diagrams (continued)

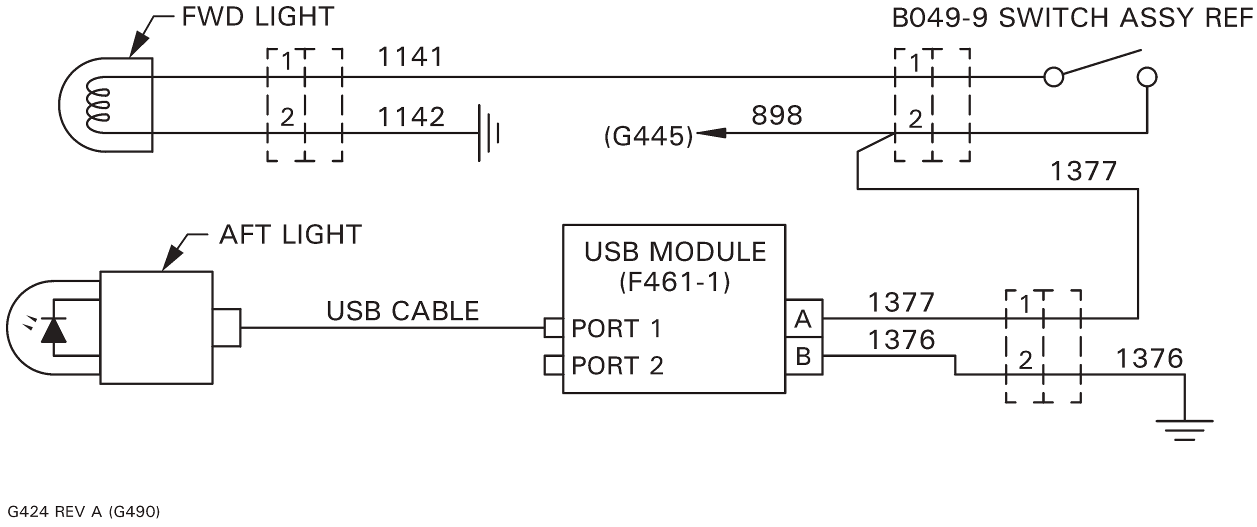

FIGURE 92-12 G490-1 TALENT LIGHT INSTALLATION WIRING DIAGRAM

92-290 Wiring Diagrams (continued)

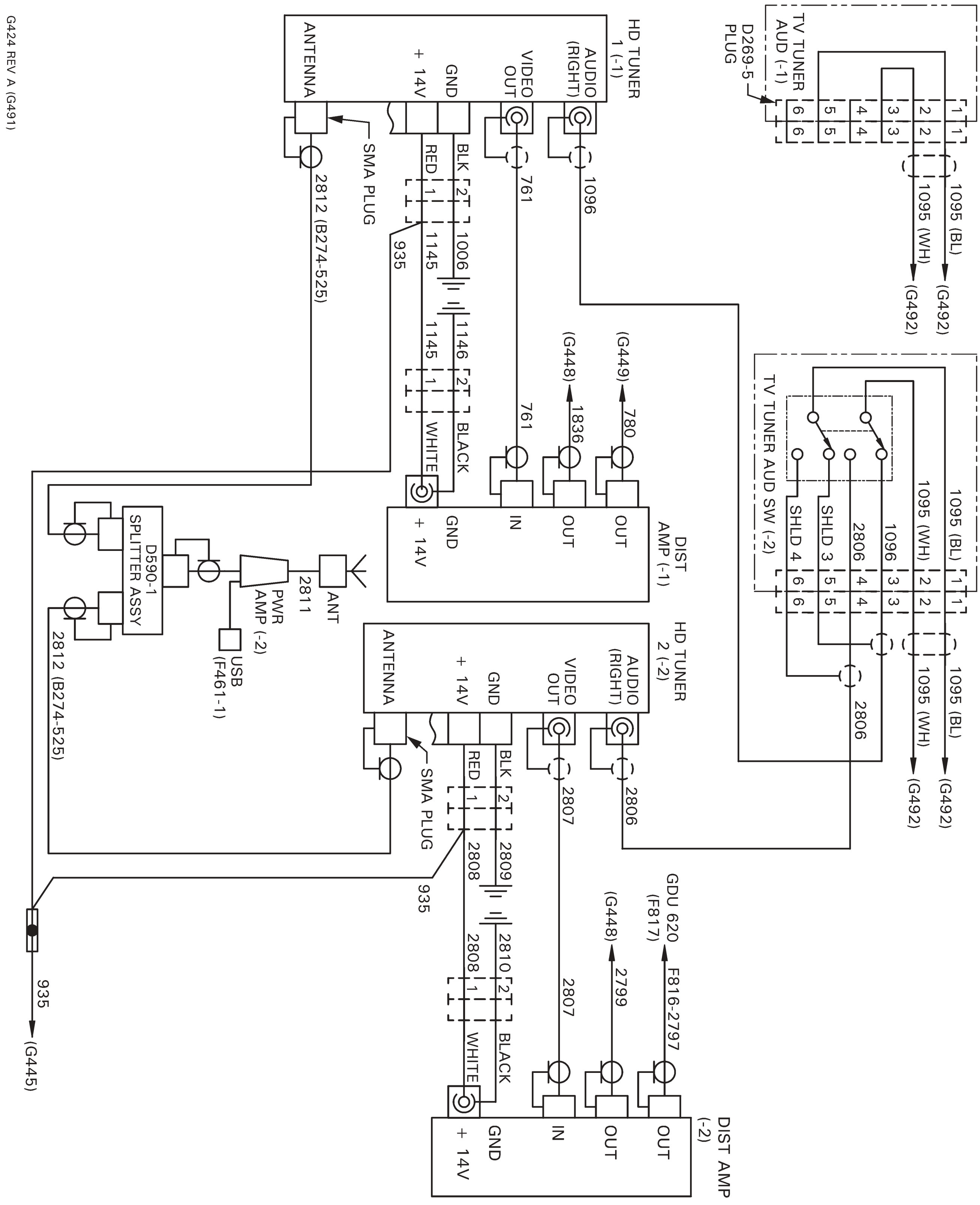

FIGURE 92-13 G491 TV RECEIVER PROVISION INSTALLATION WIRING DIAGRAM

Intentionally Blank

92-280 Wiring Diagrams (continued)

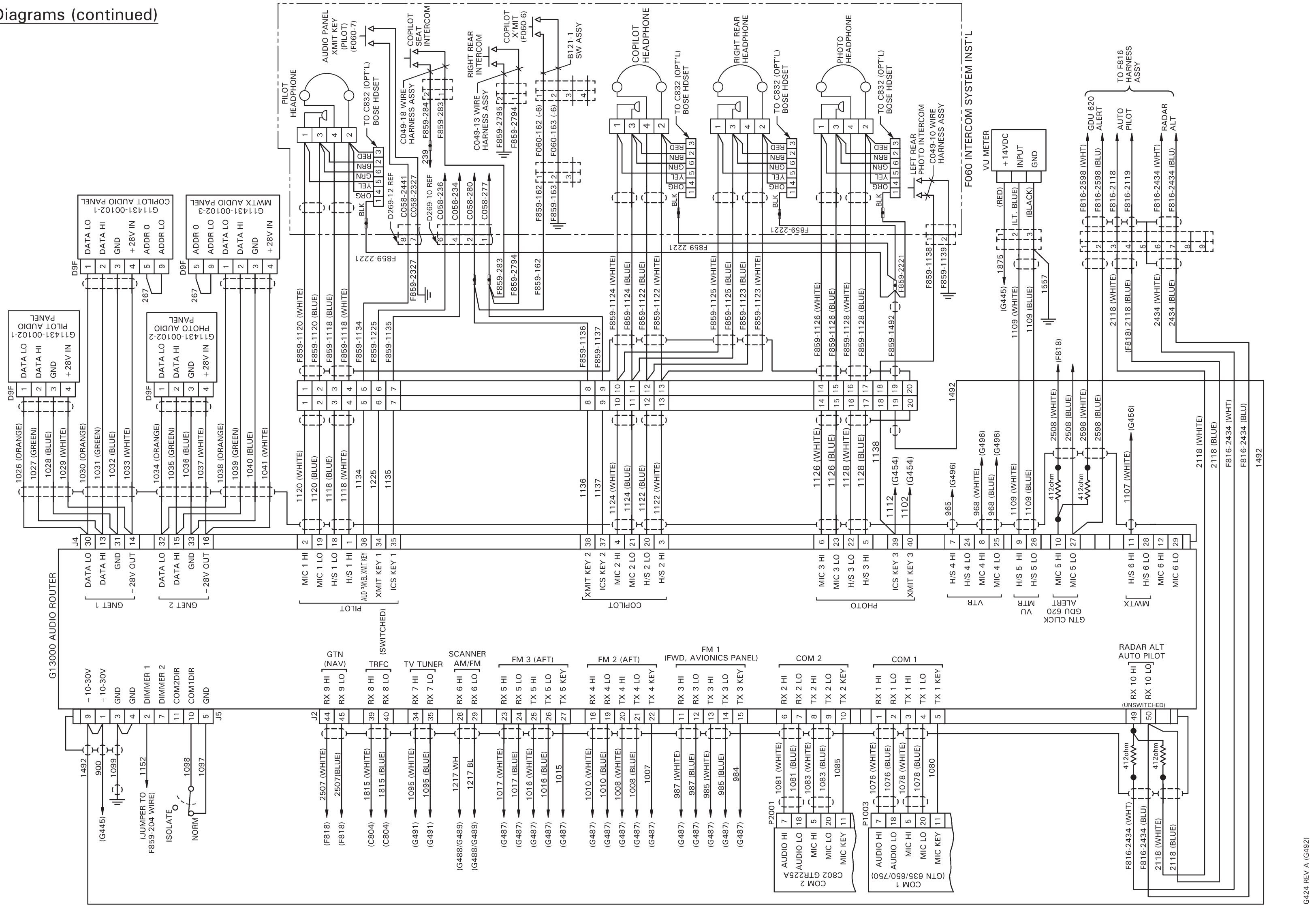

FIGURE 92-14 G492-1 AUDIO SYSTEM INSTALLATION WIRING DIAGRAM

Intentionally Blank

92-290 Wiring Diagrams (continued)

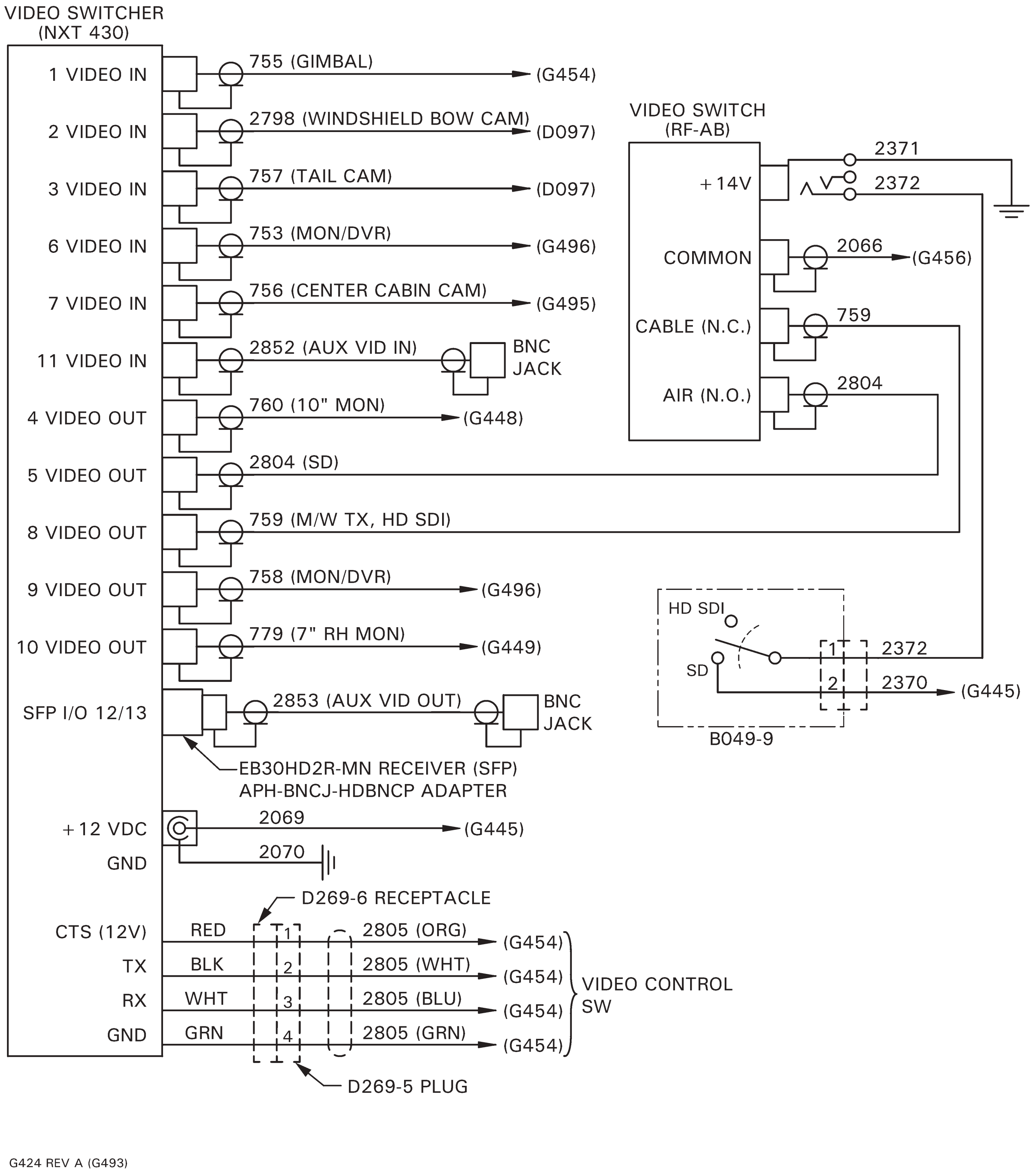

FIGURE 92-15 G493-1 VIDEO COMPONENTS INSTALLATION WIRING DIAGRAM

92-290 Wiring Diagrams (continued)

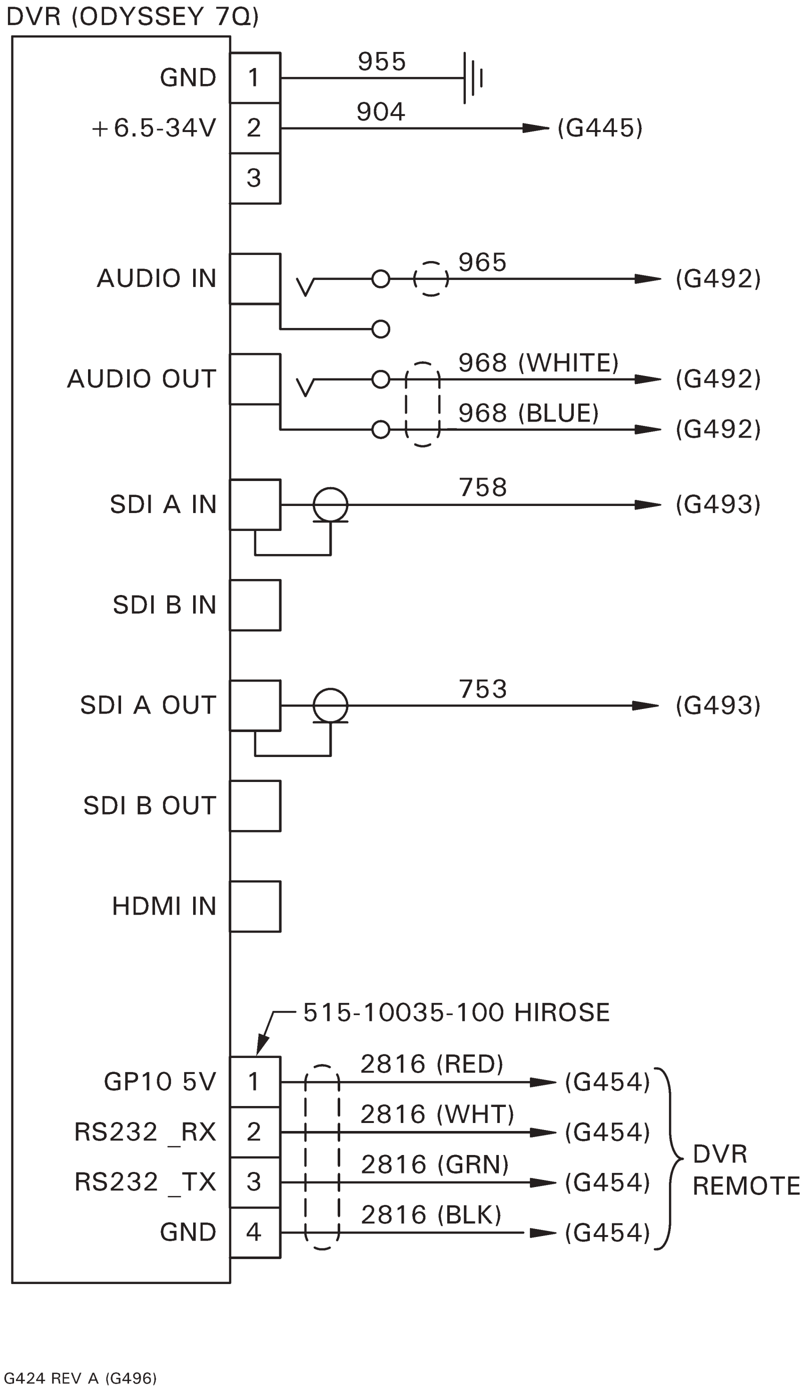

FIGURE 92-16 G496-1 DVR INSTALLATION WIRING DIAGRAM

CHAPTER 95

INSTRUMENT SYSTEM

Section *Title* *Page*

95-00 Description . . . 95.1
95-10 Pitot-Static System . . . 95.3
95-20 Primary Instruments . . . 95.5
95-21 Vertical Speed Indicator . . . 95.6
95-22 Airspeed Indicator . . . 95.7
95-23 Engine (N_2) and Rotor Dual Tachometer . . . 95.8
95-24 Altimeter . . . 95.11
95-25 Torquemeter . . . 95.12
95-26 Magnetic Compass . . . 95.13
95-30 Engine Gages . . . 95.14
95-31 N_1 Tachometer . . . 95.14
95-32 Measured Gas (Turbine) Temperature (MGT) Gage . . . 95.15
95-33 Engine Oil Pressure Gage . . . 95.16
95-34 Engine Oil Temperature Gage . . . 95.16
95-35 Fuel Quantity Gage . . . 95.17
95-40 Additional Standard Indicating Equipment . . . 95.18
95-41 Clock . . . 95.18
95-42 Ammeter . . . 95.19
95-43 Outside Air Temperature (OAT) Gage/Voltmeter . . . 95.20
95-44 Hourmeters . . . 95.21
95-50 Console Assemblies . . . 95.22
95-60 Instrument Markings . . . 95.22
95-70 Electronic Flight Displays . . . 95.25
95-71 Garmin Display Unit (GDU) 1060 . . . 95.25
95-72 Garmin Display Unit (GDU) 620 . . . 95.27
95-73 Aspen EFD500H & EFD1000H Display(s) Installation . . . 95.28

Intentionally Blank

CHAPTER 95

INSTRUMENT SYSTEM

95-00 Description

Standard primary instruments include an airspeed indicator, engine (N_2) and rotor dual tachometer, altimeter, torquemeter, and magnetic compass. Engine gages include an N_1 tachometer, measured gas (turbine) temperature, oil pressure, oil temperature, and fuel quantity. Also standard are a clock, an ammeter, a digital outside air temperature gage/voltmeter, and an hourmeter. An additional hourmeter is located outboard of the pilot's seat. Both hourmeters require main gearbox oil pressure to activate. The outboard hourmeter is collective activated and may be used to determine time in service.

For instrument panels with electronic flight displays, a P/N D327 light filter may be used to reduce reflections in the windshield at night. The light filter is installed by clipping it to the front of the display. Filter use is at pilot discretion.

The pitot-static system supplies air pressure to operate the airspeed indicator, altimeter, and vertical speed indicator. The pitot tube is located on the front edge of the mast fairing. The static sources are located on each side of the cabin, aft of the rear doors.

Water can be drained from pitot-static lines by removing the plastic drain plugs which are accessible through the aft inspection panel on the underside of the cabin. Draining lines should be required only if the airspeed indicator or altimeter appears erratic.

Pitot and static sources should be inspected frequently for bugs or other obstructions.

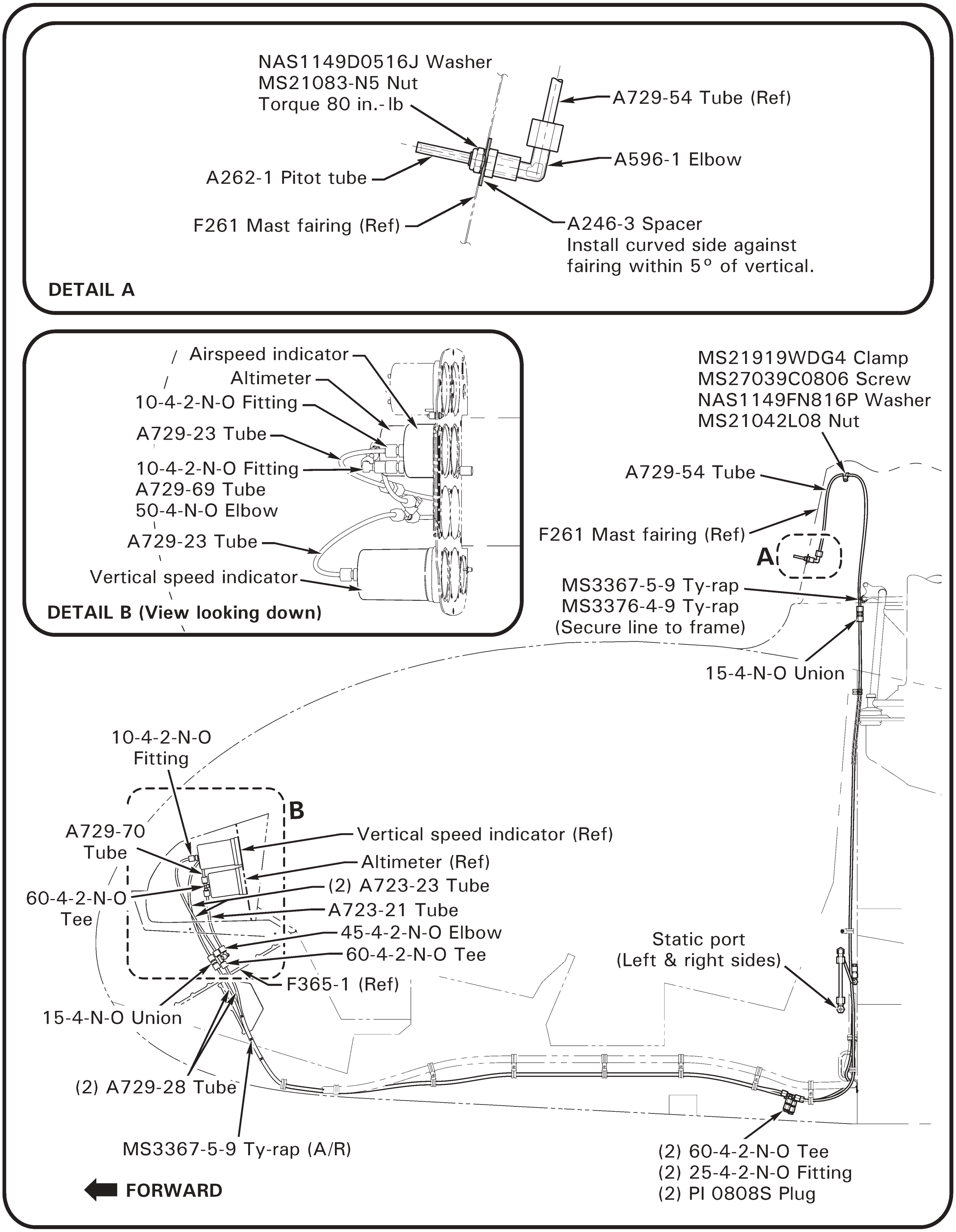

FIGURE 95-1 PITOT - STATIC SYSTEM INSTALLATION

95-10 Pitot-Static System

A. Pitot System Leak Test

CAUTION
Do not apply suction to pitot system or pressure to static system.

1. Open mast fairing per § 53-22.
2. Refer to Figures 95-1 and 95-2. Seal drain hole in elbow aft of pitot tube with pressure sensitive tape. Connect a medical syringe, with plunger withdrawn, to pitot tube via flexible tubing.
3. SLOWLY apply pressure to pitot line by depressing syringe plunger until airspeed indicator reads 70 knots. Release force on plunger; plunger will remain in place without need to pinch flexible tubing.
4. Gently tap airspeed indicator glass to remove friction effects.
5. If airspeed indication drops more than 10 knots in one minute, an unacceptable leak is indicated. SLOWLY release pressure. Locate and repair any leak(s). Retest after any repairs.
6. Remove tape from pitot tube drain hole and verify airspeed indicator has returned to zero.
7. Remove test equipment.

B. Static System Leak Test

CAUTION
Airspeed indicator, altimeter, and vertical speed indicator may be damaged if suction to static line is applied or removed rapidly.

1. Refer to Figures 95-1 and 95-2. Set altimeter to location elevation.
2. Temporarily seal left or right side static opening with pressure sensitive tape. Cover remaining static port with a suction cup attached to a medical syringe.
3. SLOWLY apply suction to static port by withdrawing syringe plunger until altimeter indicates 500 feet greater than location elevation. Release force on plunger, wait one minute, and note any change in altimeter indication.
4. Change of less than 100 feet indication in one minute is acceptable. SLOWLY remove suction from static port. Locate and repair leak(s) if altimeter indication changes 100 or more feet in one minute. Retest after any repairs.
5. Remove test equipment.

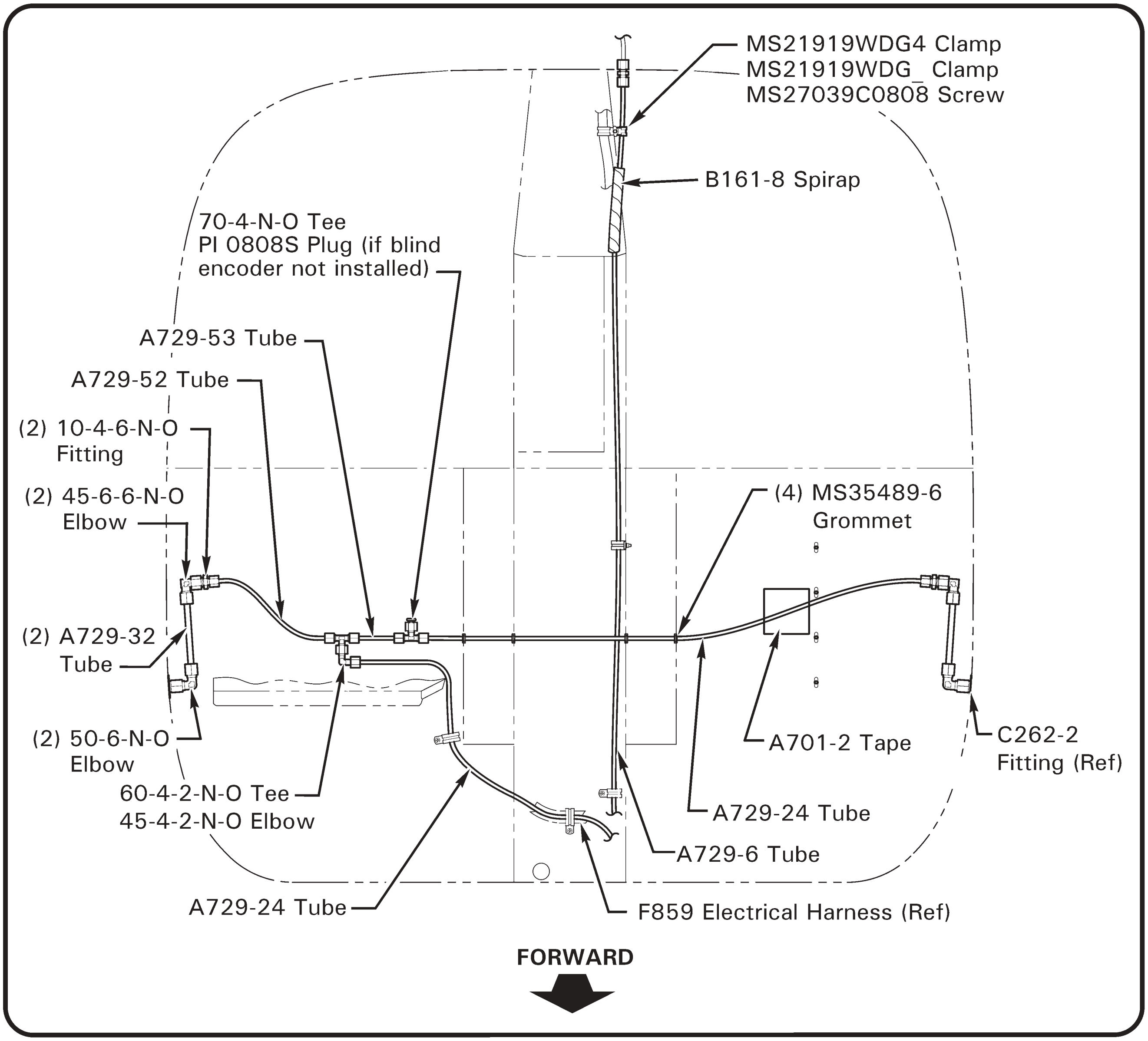

FIGURE 95-2 PITOT - STATIC SYSTEM INSTALLATION

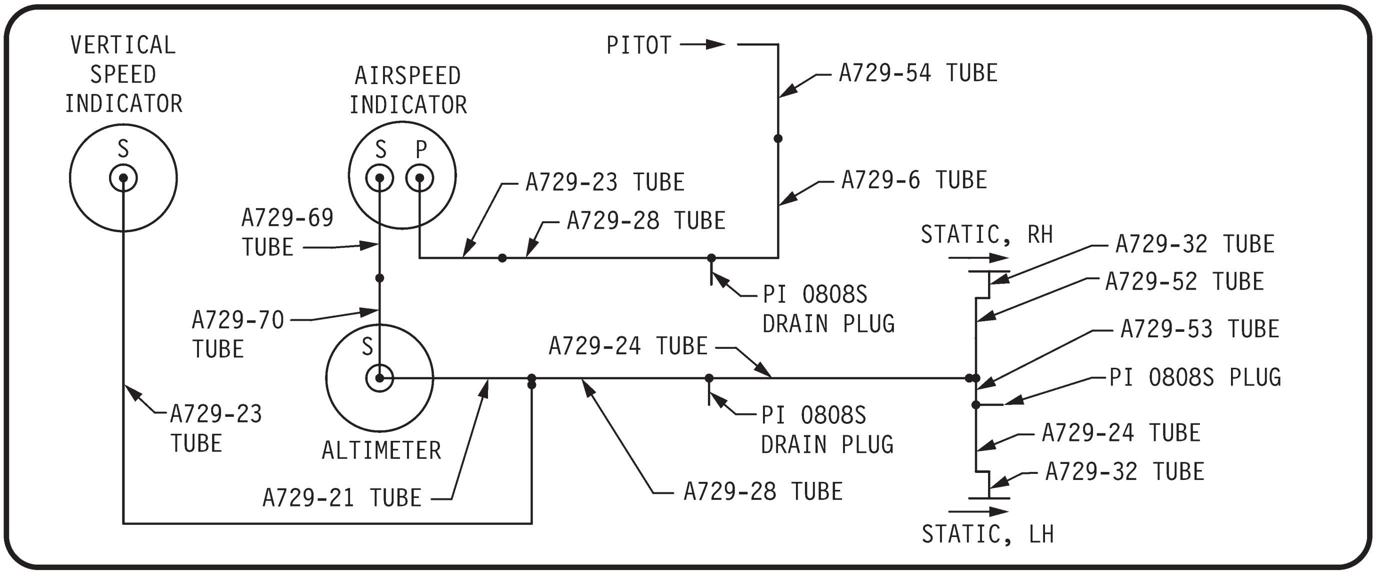

FIGURE 95-3 PITOT - STATIC SYSTEM SCHEMATIC

95-20 Primary Instruments

95-21 Vertical Speed Indicator

A. Description

The vertical speed indicator indicates rate of ascent or descent. Check vertical speed indicator for a zero-rate needle indication when rotorcraft is in a stationary hover.

B. Schematic

Refer to Figure 95-3 for pitot-static system schematic.

C. Removal

CAUTION

Protect instrumentation using foam padding or equivalent. Handle instruments like eggs.

1. Turn battery switch off and pull out applicable circuit breaker(s).
2. Remove perimeter screws securing face to console and pull face aft.
3. Remove screws securing instrument to face.
4. Disconnect wiring as applicable.
5. Disconnect pitot/static lines and cap & plug instrument and system fittings, as applicable.
6. Remove instrument and place on foam padding.

95-21 Vertical Speed Indicator (continued)

D. Installation

CAUTION

Protect instrumentation using foam padding or equivalent. Handle instruments like eggs.

1. Turn battery switch off and pull out applicable circuit breaker(s).
2. Remove caps and plugs and connect pitot/static lines. Verify security.
3. Connect wiring as applicable. Verify security.
4. Install screws securing instrument to face. Verify security.
5. Install perimeter screws securing face to console. Verify security.
6. Perform pitot-static system checks as required per § 95-10.
7. Perform appropriate function checks per § 5-40.

E. Scheduled Maintenance and Inspections

Refer to § 5-45 100-Hour/Annual Inspection.

F. Special Maintenance and Inspections

1. If vertical speed indicator displays climb indication but does not return to zero in level flight, or if indication is erratic:
   a. Inspect static system for water or obstructions, and remove water or obstructions if found.
   b. Perform pitot-static system checks as required per § 95-10.
2. Perform appropriate function checks per § 5-40. If vertical speed indicator still displays erratic indication, or displays no indication, remove indicator per Part C, and return to RHC for inspection.
3. Install airworthy indicator per Part D.

95-22 Airspeed Indicator

A. Description

The airspeed indicator displays airspeed in knots and either miles or kilometers per hour. The airspeed indicator operates properly in forward flight only; backward or lateral flight will not indicate correct airspeed.

B. Schematic

Refer to Figure 95-3 for pitot-static system schematic.

C. Removal

Remove airspeed indicator per § 95-21 Part C.

D. Installation

Install airspeed indicator per § 95-21 Part D.

E. Scheduled Maintenance and Inspections

Refer to § 5-45 100-Hour/Annual Inspection.

F. Special Maintenance and Inspections

1. If airspeed indicator displays no indication:
   - a. Inspect pitot tube for obstructions and remove obstructions if found.
   - b. Inspect pitot tube connection, and tighten connection if loose.
   - c. Open upper console and inspect pitot line for kinks or bends.
   - d. Perform pitot-static system checks as required per § 95-10.
   - e. Perform appropriate function checks per § 5-40. If indicator still displays no indication, remove indicator per Part C, and return to RHC for inspection.
   - f. Install airworthy indicator per Part D.
2. If airspeed indicator displays erratic indication:
   - a. Inspect pitot-static system connection(s), and tighten connection(s) if loose.
   - b. Inspect pitot-static system lines and verify no lines are cracked or broken.
   - c. Inspect pitot-static system for water, and remove water if found.
   - d. Open upper console and inspect pitot lines for kinks or bends.
   - e. Perform pitot-static system checks as required per § 95-10.
   - f. Perform appropriate function checks per § 5-40. If indicator still displays erratic indication, remove indicator per Part C, and return to RHC for inspection.
   - g. Install airworthy indicator per Part D.

95-23 Engine (N_2) and Rotor Dual Tachometer

A. Description

CAUTION

Installation of electrical devices can affect accuracy and reliability of electronic tachometers.

An electronic engine (N2) and rotor dual tachometer is standard. Engine tachometer signal is provided by a transducer on the engine gearbox. Rotor tachometer signal is provided by magnets on the main gearbox tail rotor driveline yoke. Each tachometer is on a separate circuit with its own circuit breaker.

The tachometer bus receives power from the avionics bus or through the battery relay bypass circuit as long as the main rotor gearbox has oil pressure. Therefore, the tachometers will receive power through the bypass circuit whenever the rotors are turning even if the avionics bus is not powered. The bypass circuit is disconnected from the tachometer bus when the annunciator test button is depressed. Pressing the test button while the helicopter is running will confirm that the tachometers are receiving power from the avionics bus.

NOTE

Do not use magnetized tools.

CAUTION

Protect instrumentation using foam padding or equivalent. Handle instruments like eggs.

B. Removal

1. Turn battery switch off and pull out TACHS N_2 (2 amp) and R (2 amp) circuit breakers on circuit breaker panel.
2. Remove perimeter screws securing instrument face to console and pull face aft.
3. Remove screws securing console harness connector to F792-1 dual tachometer and unplug connector.
4. Supporting instrument, remove screws securing tachometer to face, and remove tachometer.

95-23 Engine (N_2) and Rotor Dual Tachometer (continued)

C. Installation

1. Turn battery switch off and pull out TACHS N_2 (2 amp) and R (2 amp) circuit breakers on circuit breaker panel.
2. Install screws securing F792-1 dual tachometer to instrument face. Verify security.
3. Plug in console harness connector to tachometer and install connector screws. Verify security.
4. Install perimeter screws securing face to console. Verify security.
5. Perform accuracy check and needle synchronization per Part D.

D. Accuracy Check and Needle Synchronization

CAUTION

Inadvertent engine overspeed can occur if accuracy check is not performed.

1. Perform PTG rigging check per § 76-22.
2. Install magnetic pickup (or photocell) portion of calibrated main rotor balancing equipment per § 18-11.
3. Push in TACHS N_2 (2 amp) and R (2 amp) circuit breakers on circuit breaker panel. Turn battery switch on, open throttle, and "beep" actuator to minimum (RPM) setting. Close throttle and turn battery switch off.
4. a. Start engine and run-up helicopter per R66 Pilot's Operating Handbook (POH) Section 4, establish stable idle, and record dual tachometer's % N_2 indication. Also record RPM displayed on balancer.
   b. Multiply dual tachometer's % N_2 indication (use 0.69 for 69%, 0.70 for 70%, etc.) by 408 RPM. Verify calculated RPM is within ± 8 RPM displayed on balancer.
   c. If calculated RPM is more than ± 8 RPM displayed on balancer, shut down helicopter per POH Section 4. Do not proceed further; contact RHC Technical Support.
5. Monitor RPM displayed on balancer and increase throttle to full open. Immediately close throttle and shut down helicopter per POH Section 4 if balancer indication exceeds 412 RPM.
6. Monitor RPM displayed on balancer and "beep" actuator until dual tachometer indicates 100% N_2. Verify RPM displayed on balancer is 408 ± 4 RPM; do not exceed 412 RPM.

95-23 Engine (N_2) and Rotor Dual Tachometer (continued)

D. Accuracy Check and Needle Synchronization (continued)

7. Verify dual tachometer's % NR indication is within 1% of % N_2 indication. If required, adjust % NR by turning screw on back of tachometer. Turning screw clockwise increases % NR and turning screw counterclockwise decrease % NR; one-half turn equals approximately 1% change. Adjusting screw is accessed by removing instrument face perimeter screws and pulling face aft.
8. Shut down helicopter per R66 POH Section 4.
9. Install perimeter screws securing face to console. Verify security.

E. Scheduled Maintenance and Inspections

Refer to § 5-45 100-Hour/Annual Inspection.

Refer to § 4-22 for recommended replacement time between overhauls.

F. Special Maintenance and Inspections

1. Perform accuracy check and needle synchronization per Part D.
2. If tachometer cannot be adjusted, remove tachometer per Part B, and return to RHC for inspection.
3. Install airworthy tachometer per Part C.

95-24 Altimeter

A. Description

The sensitive altimeter provides altitude information relative to mean sea level when the barometric pressure correction scale is properly set. Check altimeter calibration by setting correction scale to the current altimeter setting and checking the altimeter reading against field elevation; they must agree within 70 feet.

B. Schematic

Refer to Figure 95-3 for pitot-static system schematic.

C. Removal

Remove altimeter per § 95-21 Part C.

D. Installation

Install altimeter per § 95-21 Part D.

E. Scheduled Maintenance and Inspections

Refer to § 5-45 100-Hour/Annual Inspection.

F. Special Maintenance and Inspections

1. If altimeter displays no indication:
    a. Inspect static lines for obstructions and remove obstructions if found.
    b. Perform pitot-static system checks as required per § 95-10.
    c. Perform appropriate function checks per § 5-40. If altimeter still displays no indication, remove altimeter per Part C, and return to RHC for inspection.
    d. Install airworthy altimeter per Part D.
2. If altimeter displays erratic indication:
    a. Inspect static system for water, and remove water if found.
    b. Perform pitot-static system checks as required per § 95-10.
    c. Perform appropriate function checks per § 5-40. If altimeter still displays erratic indication, remove altimeter per Part C, and return to RHC for inspection.
    d. Install airworthy altimeter per Part D.

95-25 Torquemeter

A. Description

The electronic torquemeter indicates percent torque. The torque sensor is an oil pressure transducer mounted on the front of the engine's accessory gearbox.

B. Schematic

Refer to Figure 98-1 for electrical schematic.

C. Removal

Remove torquemeter per § 95-21 Part C.

D. Installation

Install torquemeter per § 95-21 Part D.

E. Scheduled Maintenance and Inspections

Refer to § 5-45 100-Hour/Annual Inspection.

F. Special Maintenance and Inspections

1. Inspect wiring for loose, chafed, frayed, or broken wires. Verify no damaged connectors. Verify wiring neatness, proper routing and installation, and security.
2. Perform appropriate function checks per § 5-40. If accuracy of torquemeter is suspected, remove torquemeter per Part C, and check calibration per Figure 95-3A.
3. Install airworthy torquemeter per Part D.

PIN	FUNCTION
1	SPARE
2	GND
3	CASE GND
4	SHIELD
5	SPARE
6	+POWER
7	+POWER
8	SIGNAL LO
9	SIGNAL HI

% TORQUE*	SIGNAL (VDC)*
0	0.480
20	0.914
40	1.347
60	1.781
80	2.214
83	2.279
100	2.648
120	3.081

* Accuracy is ± 0.5% at 20% and 100%; ± 2% elsewhere.

FIGURE 95-3A TORQUEMETER CALIBRATION CHECK

95-26 Magnetic Compass

A. Description

An internally illuminated, wet-type compass is attached to the center bow between the windshields above the instrument panel.

B. Schematic

Refer to Figure 98-1 for electrical schematic.

C. Removal

1. Remove hardware securing B339-2 mount to windshield bow.
2. Remove hardware securing B148-5 compass assembly to mount.
3. Remove heat shrink as required and disconnect light bar wires from airframe harness. Remove compass.

D. Installation

1. Install heat shrinks over wires and connect B148-5 compass assembly's light bar wires to airframe harness. Verify security. Activate heat shrinks.
2. Install hardware securing compass to B339-2 mount. Verify security.
3. Install hardware securing mount to windshield bow. Verify security.
4. Using the airport compass rose, align the helicopter skids on the rose lines, and record the indicated compass headings at 30° increments. Adjust compass compensator magnets as required until the maximum error at any heading is 5° or less with all avionics operating, all exterior lights on, and dimmer full bright. Record the final readings on the aircraft compass card. Re-check 4 cardinal headings with lights off and all avionics off except COM radio 1 and transponder. Verify maximum error remains 5° or less.

E. Scheduled Maintenance and Inspections

Refer to § 5-45 100-Hour/Annual Inspection.

F. Special Maintenance and Inspections

1. Perform compass deviation check per Part D step 4.
2. If compass cannot be adjusted to limits specified, remove compass per Part C, and install airworthy compass per Part D.

95-30 Engine Gages

95-31 N_1 Tachometer

A. Description

The electronic N_1 tachometer indicates percent RPM of the engine's gas producer section. The N_1 sensor is a sealed variable-reluctance, permanent-magnet device mounted atop the engine's accessory gearbox adjacent to the hoisting lug.

B. Schematic

Refer to Figure 98-1 for electrical schematic.

C. Removal

1. Turn battery switch off and pull out applicable circuit breaker(s).
2. Remove screws securing upper console to lower console and tilt upper console aft.
3. Loosen screws securing console wiring connector to G144-6 instrument cluster and disconnect wiring.
4. Remove screws securing instrument cluster to G051 shell assembly's face plate and remove instrument cluster.

D. Installation

1. Turn battery switch off and pull out applicable circuit breaker(s).
2. Remove screws securing upper console to lower console and tilt upper console aft.
3. Position G144-6 instrument cluster on G051 shell assembly's face plate and install screws. Verify security.
4. Connect console wiring connector to G144-6 instrument cluster tighten connector screws. Verify security.
5. Tilt console forward and install screws securing upper console to lower console. Verify security.
6. Perform appropriate function checks per § 5-40.

E. Scheduled Maintenance and Inspections

Refer to § 5-45 100-Hour/Annual Inspection.

95-31 N_1 Tachometer (continued)

F. Special Maintenance and Inspections

1. Inspect wiring for loose, chafed, frayed, or broken wires. Verify no damaged connectors. Verify wiring neatness, proper routing and installation, and security.
2. Perform appropriate function checks per § 5-40. If accuracy of engine gage is suspected, remove G144-6 instrument cluster per Part C, and return to RHC for inspection.
3. Install airworthy instrument cluster per Part D.

95-32 Measured Gas (Turbine) Temperature (MGT) Gage

A. Description

The measured gas temperature (MGT) gage connects to the engine's thermocouple harness via different size connectors to ensure correct polarity. Refer to RR300 Series Operation and Maintenance Manual (OMM) for periodic calibration requirements.

B. Schematic

Refer to Figure 98-1 for electrical schematic.

C. Removal

Remove G144-6 instrument cluster per § 95-31 Part C.

D. Installation

Install G144-6 instrument cluster per § 95-31 Part D.

E. Scheduled Maintenance and Inspections

Refer to § 5-45 100-Hour/Annual Inspection.

F. Special Maintenance and Inspections

Perform special maintenance and inspections per § 95-31 Part F.

95-33 Engine Oil Pressure Gage

A. Description

The engine oil pressure gage is electronic. The oil pressure sensor is a transducer mounted on the lower front of the engine's accessory gearbox.

B. Schematic

Refer to Figure 98-1 for electrical schematic.

C. Removal

Remove G144-6 instrument cluster per § 95-31 Part C.

D. Installation

Install G144-6 instrument cluster per § 95-31 Part D.

E. Scheduled Maintenance and Inspections

Refer to § 5-45 100-Hour/Annual Inspection.

F. Special Maintenance and Inspections

Perform special maintenance and inspections per § 95-31 Part F.

95-34 Engine Oil Temperature Gage

A. Description

The engine oil temperature gage is electronic. The oil temperature sensor is a transducer mounted on the inboard wall of the oil tank.

B. Schematic

Refer to Figure 98-1 for electrical schematic.

C. Removal

Remove G144-6 instrument cluster per § 95-31 Part C.

D. Installation

Install G144-6 instrument cluster per § 95-31 Part D.

E. Scheduled Maintenance and Inspections

Refer to § 5-45 100-Hour/Annual Inspection.

F. Special Maintenance and Inspections

Perform special maintenance and inspections per § 95-31 Part F.

95-35 Fuel Quantity Gage

A. Description

The electric fuel quantity gage indicates relative fuel quantity. The variable resistance sender is mounted near the fuel cap.

B. Schematic

Refer to Figure 98-1 for electrical schematic.

C. Removal

Remove G144-6 instrument cluster per § 95-31 Part C.

D. Installation

Install G144-6 instrument cluster per § 95-31 Part D.

E. Scheduled Maintenance and Inspections

Refer to § 5-45 100-Hour/Annual Inspection.

F. Special Maintenance and Inspections

Perform special maintenance and inspections per § 95-31 Part F.

95-40 Additional Standard Indicating Equipment

95-41 Clock

A. Description

A manually set electric analog clock is standard equipment; a digital clock is optional.

B. Schematic

Refer to Figure 98-1 for electrical schematic.

C. Removal

1. Remove perimeter screws securing face to console and pull face aft, or remove screws securing upper console to lower console and tilt upper console aft, as applicable.
2. Remove screws securing clock to face.
3. Disconnect console wiring from clock wiring at connectors, and remove clock.

D. Installation

1. Connect console wiring to clock wiring at connectors. Verify security.
2. Install screws securing clock to face. Verify security.
3. Install perimeter screws securing face to console and verify security, or tilt console forward and install screws securing upper console to lower console and verify security, as required.

E. Scheduled Maintenance and Inspections

Refer to § 5-45 100-Hour/Annual Inspection.

F. Special Maintenance and Inspections

1. Check AGC-3 (3 amp) fuse at firewall for evidence of melting and replace fuse as required.
2. Inspect wiring for loose, chafed, frayed, or broken wires. Verify no damaged connectors. Verify wiring neatness, proper routing and installation, and security.
3. If clock is still inoperative, remove clock per Part C, and install airworthy clock per Part D.

95-42 Ammeter

A. Description

The ammeter indicates electrical system loads. System load is measured across the A780-71 cable (shunt; cable is calibrated, do not alter cable) located between the starter/generator and relay on right side of engine compartment.

B. Schematic

Refer to Figure 98-1 for electrical schematic.

C. Removal

1. Remove perimeter screws securing face to console and pull face aft, or remove screws securing upper console to lower console and tilt upper console aft, as applicable.
2. Remove screws securing ammeter to face.
3. Disconnect console wiring from ammeter wiring at connectors, and remove ammeter.

D. Installation

1. Connect console wiring to ammeter wiring at connectors. Verify security.
2. Install screws securing ammeter to face. Verify security.
3. Install perimeter screws securing face to console and verify security, or tilt console forward and install screws securing upper console to lower console and verify security, as required.

E. Scheduled Maintenance and Inspections

Refer to § 5-45 100-Hour/Annual Inspection.

F. Special Maintenance and Inspections

1. Check continuity across two 3-amp fuses in B304-16 fuse assembly (in airframe harness on right side of engine compartment) and replace fuse assembly as required.
2. Inspect wiring for loose, chafed, frayed, or broken wires. Verify no damaged connectors. Verify wiring neatness, proper routing and installation, and security.
3. If ammeter is still inoperative, remove ammeter per Part C, and install airworthy ammeter per Part D.

95-43 Outside Air Temperature (OAT) Gage/Voltmeter

A. Description

> NOTE
>
> No cutting or splicing of OAT probe wires is permitted.

The outside air temperature gage is connected via a calibrated, twisted pair wiring harness to a stainless steel probe protruding from the chin.

B. Schematic

Refer to Figure 98-1 for electrical schematic.

C. Removal

1. Remove perimeter screws securing face to console and pull face aft, or remove screws securing upper console to lower console and tilt upper console aft, as applicable.
2. Remove screws securing OAT gage to face.
3. Disconnect console wiring from OAT gage wiring at connectors, and remove gage.

D. Installation

1. Connect console wiring to OAT gage wiring at connectors. Verify security.
2. Install screws securing OAT gage to face. Verify security.
3. Install perimeter screws securing face to console and verify security, or tilt console forward and install screws securing upper console to lower console and verify security, as required.

E. Scheduled Maintenance and Inspections

Refer to § 5-45 100-Hour/Annual Inspection.

F. Special Maintenance and Inspections

1. Inspect wiring for loose, chafed, frayed, or broken wires. Verify no damaged connectors. Verify wiring neatness, proper routing and installation, and security.
2. If OAT gage is still inoperative, remove OAT gage per Part C, and install airworthy OAT gage per Part D.

95-44 Hourmeters

A. Description

Two hourmeters are standard. One hourmeter is mounted above the ammeter and is activated by main gearbox oil pressure. Another hourmeter on the horizontal panel outboard of the pilot's seat is activated by a combination of main gearbox oil pressure and a raised collective and is approved for recording time in service.

B. Schematic

Refer to Figure 98-1 for electrical schematic.

C. Removal

Collective-Activated Hourmeter

1. Remove screws securing hourmeter, faceplate, and carpet to F353-2 panel.
2. Disconnect airframe wiring from hourmeter wiring at connectors, and remove hourmeter.

Console Hourmeter

1. Remove screws securing hourmeter to F640 face assembly, remove screws securing face to lower console, and supporting hourmeter, remove face.
2. Disconnect airframe wiring from hourmeter, and remove hourmeter.

D. Installation

Collective-Activated Hourmeter

1. Connect airframe wiring to hourmeter wiring at connectors. Verify security.
2. Install screws securing hourmeter, faceplate, and carpet to F353-2 panel. Verify security.

Console Hourmeter

1. Connect airframe wiring to hourmeter (F859-2053 to positive terminal). Verify security.
2. Install screws securing F640 face assembly to lower console. Install screws securing hourmeter to face. Verify security.

E. Scheduled Maintenance and Inspections

On condition.

F. Special Maintenance and Inspections

1. Inspect wiring for loose, chafed, frayed, or broken wires. Verify no damaged connectors. Verify wiring neatness, proper routing and installation, and security.
2. If hourmeter is still inoperative, remove hourmeter per Part C, and install airworthy hourmeter per Part D. Make appropriate maintenance record entries.

95-50 Console Assemblies

> **NOTE**
>
> Refer to R66 Pilot's Operating Handbook Section 7 for views of typical instrument panels, and the Optional Avionics Supplement for views of panels with electronic flight displays.

A. Opening Console

Upper instrument panels that do not include Electronic Flight Displays (EFDs) or other avionics may be "opened" by removing screws securing console assembly to forward keel panels and hinging console aft. Secure console by hinging forward and installing screws. If an EFD or any other avionics are installed in the upper instrument panel, remove console per Part B.

B. Removing Console

1. Remove EFD if installed per § 95-70.
2. Remove avionics if installed and located in upper instrument console per Chapter 97.
3. Remove HeliSAS control panel if installed and located in upper instrument console (not required if control panel is located at top of avionics stack).
4. Remove perimeter screws securing instrument face to console.
5. Disconnect instrument pitot-static lines. Plug lines.
6. Remove screws securing console assembly to forward keel panels and lower panel. Remove console and disconnect console harness from airframe harness.

C. Installing Console

1. Connect console assembly harness to airframe harness and install screws securing console to forward keel panels and lower panel.
2. Position instrument face in helicopter, remove plugs, and connect pitot-static lines.
3. Install perimeter screws securing face to console. Verify security.
4. Install HeliSAS control panel, if removed.
5. Install avionics per Chapter 97, if removed.
6. Install EFD per § 95-70, if removed.
7. Perform pitot-static system leak check per § 95-10.

95-60 Instrument Markings

See R66 Pilot’s Operating Handbook (POH) Section 2 for instrument markings.

Intentionally Blank

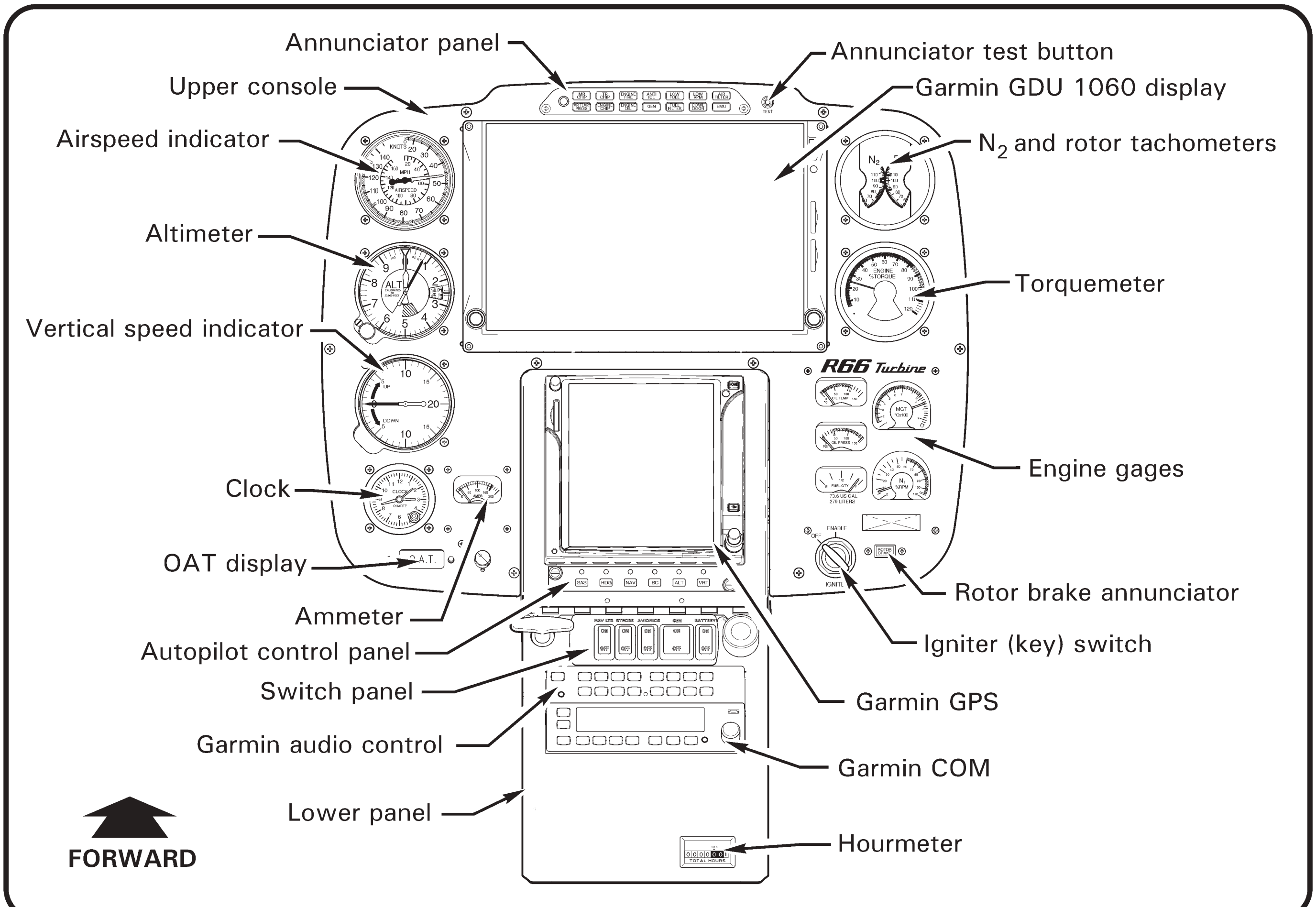

FIGURE 95-4 GARMIN G500H UPPER CONSOLE WITH GDU 1060

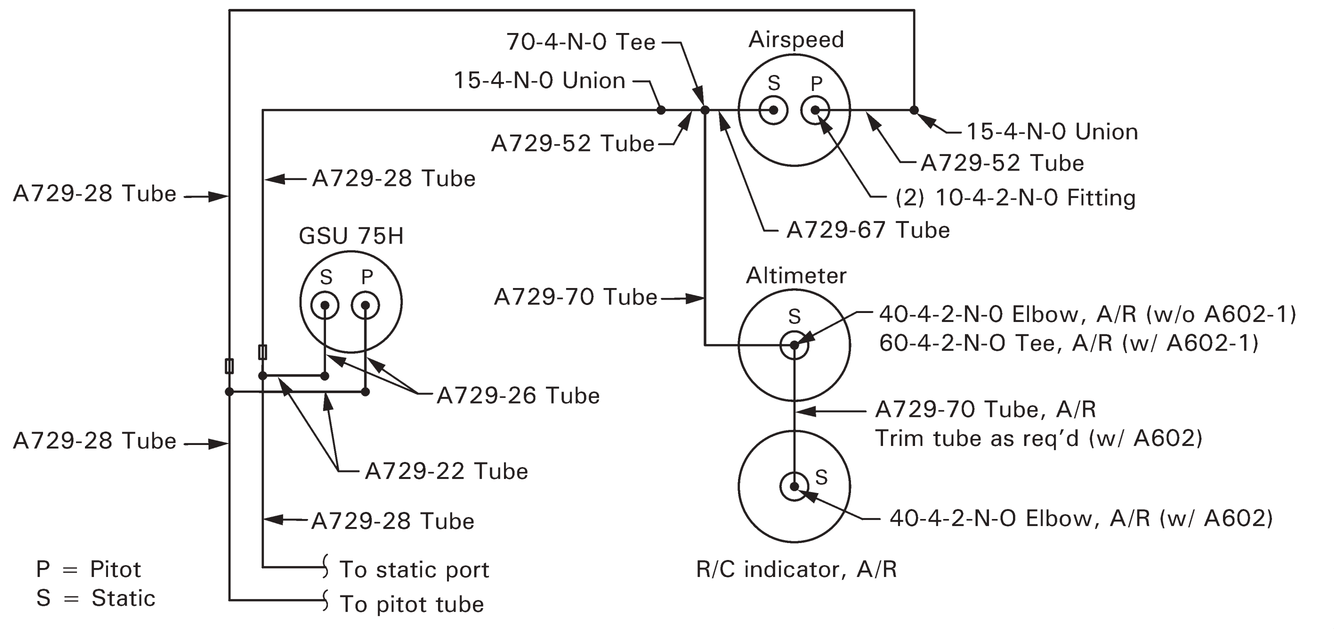

FIGURE 95-5 GARMIN G500H UPPER CONSOLE PITOT-STATIC SCHEMATIC

95-70 Electronic Flight Displays

95-71 Garmin Display Unit (GDU) 1060

NOTE
Refer to Garmin G500H Instructions for Continued Airworthiness.

A. Description

The GDU 1060 integrates with the Garmin G500H Electronic Flight Instrument System (EFIS). Similar to the GDU 620, the GDU 1060 electronically displays primary flight instrumentation via a primary flight display (PFD) and moving map, weather, traffic, terrain and other functionality via a multifunction display (MFD), but includes touch-screen technology on one large 10.6 inch display. A larger instrument panel accommodates the larger display.

Refer to § 97-10 for Garmin G500H EFIS system components.

B. Schematics

Refer to Figure 98-9 for GDU 1060 installation electrical schematic.

Refer to Figures 95-3 & 95-5 for Garmin G500H upper console pitot-static schematic.

C. Removal

1. Turn battery & avionics switches off and pull out EFIS circuit breaker (5 amp) on circuit breaker panel.
2. Remove screws securing GDU to console face.
3. Pull out and support display, unplug console harness connectors, and remove display.

D. Installation

1. Turn battery & avionics switches off and pull out EFIS circuit breaker (5 amp) on circuit breaker panel.
2. Visually inspect console harness connectors and verify no bent or damaged pins. Support display and plug in console harness connectors.
3. Place GDU in console, then install and tighten screws. Verify security.
4. Push in EFIS circuit breaker on circuit breaker panel. Turn battery & avionics switches on.
5. Perform appropriate functional checks per Garmin G500H Instructions for Continued Airworthiness. Turn battery & avionics switches off.

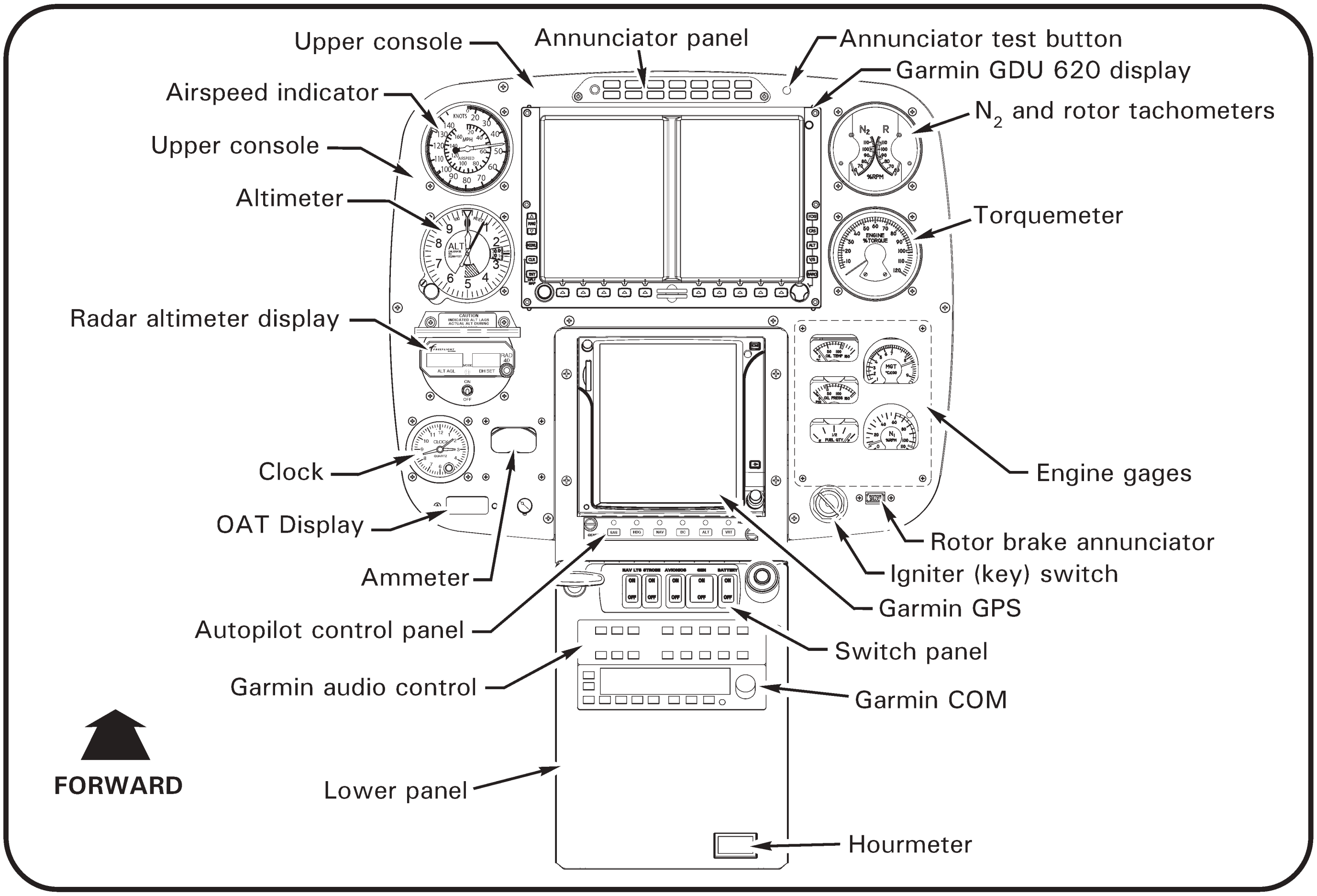

FIGURE 95-6 GARMIN G500H UPPER CONSOLE WITH GDU 620

95-71 Garmin Display Unit (GDU) 1060 (continued)

E. Scheduled Maintenance and Inspections

Refer to Garmin G500H Instructions for Continued Airworthiness.

NOTE
All factory-installed Garmin units are "on condition" and do not require scheduled periodic maintenance. Units feature a BIT (Built-In Test) function during each initial power-up that will detect internal failure(s) and alert pilot.

NOTE
Refer to § 97-60 for avionics software information.

95-71 Garmin Display Unit (GDU) 1060 (continued)

F. Special Maintenance and Inspections

1. Remove GDU per § 95-71 Part C.
2. Open circuit breaker panel and upper console.
3. Inspect condition of and verify no obvious damage to GDU, copper bus bars, circuit breaker, and wiring. Verify no loose, chafed, or broken wires or terminals. Verify no evidence of arcing. Verify installed equipment security.
4. Secure circuit breaker panel and upper console.
5. Install GDU per § 95-71 Part D.

95-72 Garmin Display Unit (GDU) 620 Installation

> NOTE
>
> Refer to Garmin G500H Instructions for Continued Airworthiness.

A. Description

The GDU 620 integrates with the Garmin G500H Electronic Flight Instrument System (EFIS). The GDU 620 electronically displays primary flight instrumentation via a primary flight display (PFD) and moving map, weather, traffic, terrain and other functionality via a multifunction display (MFD) on dual 6.5 inch displays.

Refer to § 97-10 for Garmin G500H EFIS system components.

B. Schematics

Refer to Figure 98-10 for GDU 620 installation electrical schematic.

Refer to Figures 95-3 & 95-5 for Garmin G500H upper console pitot-static schematic.

C. Removal

Remove GDU per § 95-71 Part C.

D. Installation

Install GDU per § 95-71 Part D.

E. Scheduled Maintenance and Inspections

Refer to Garmin G500H Instructions for Continued Airworthiness.

F. Special Maintenance and Inspections

Refer to § 95-71 Part F.

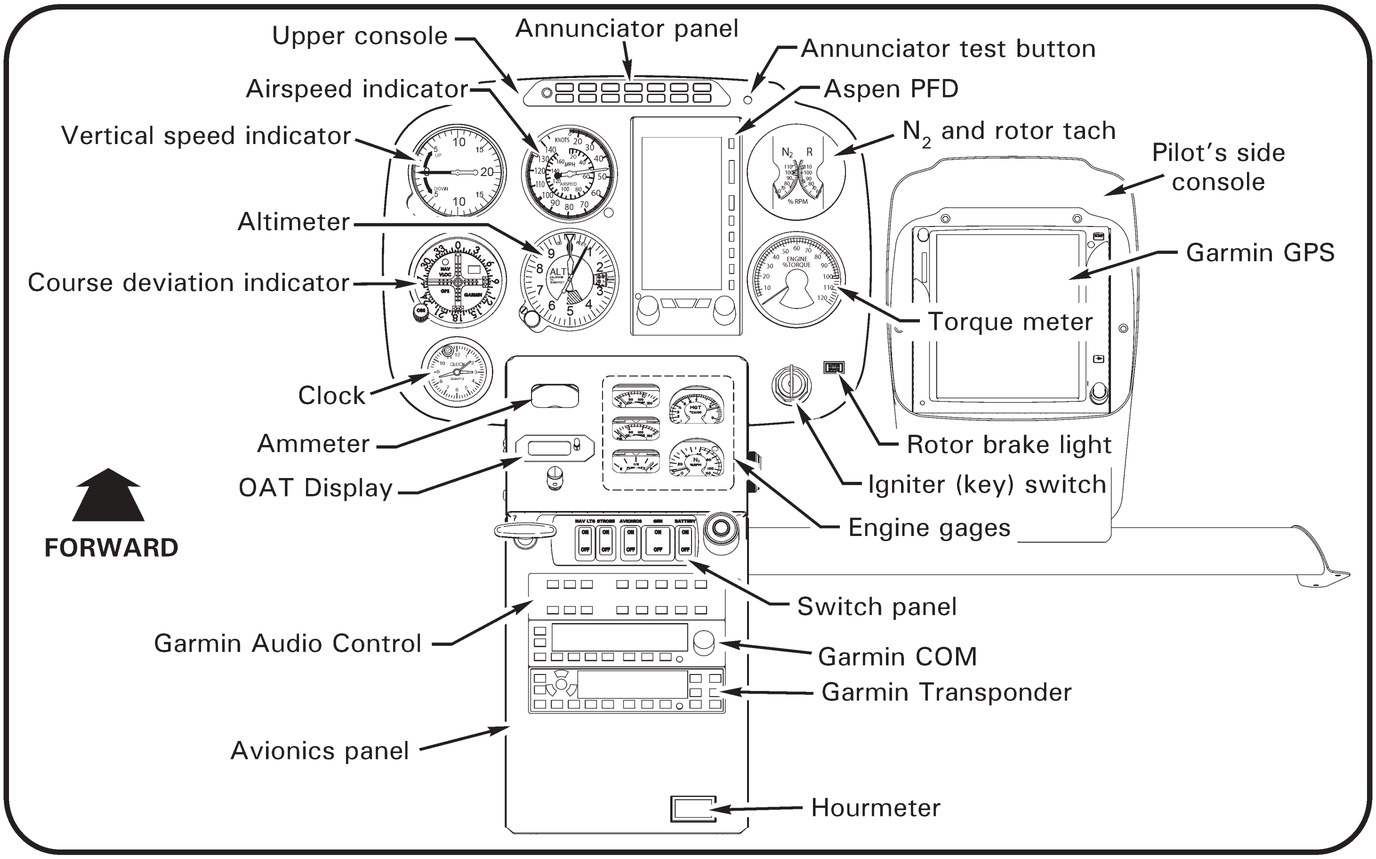

FIGURE 95-7 EIGHT-INSTRUMENT CONSOLE WITH ASPEN PFD

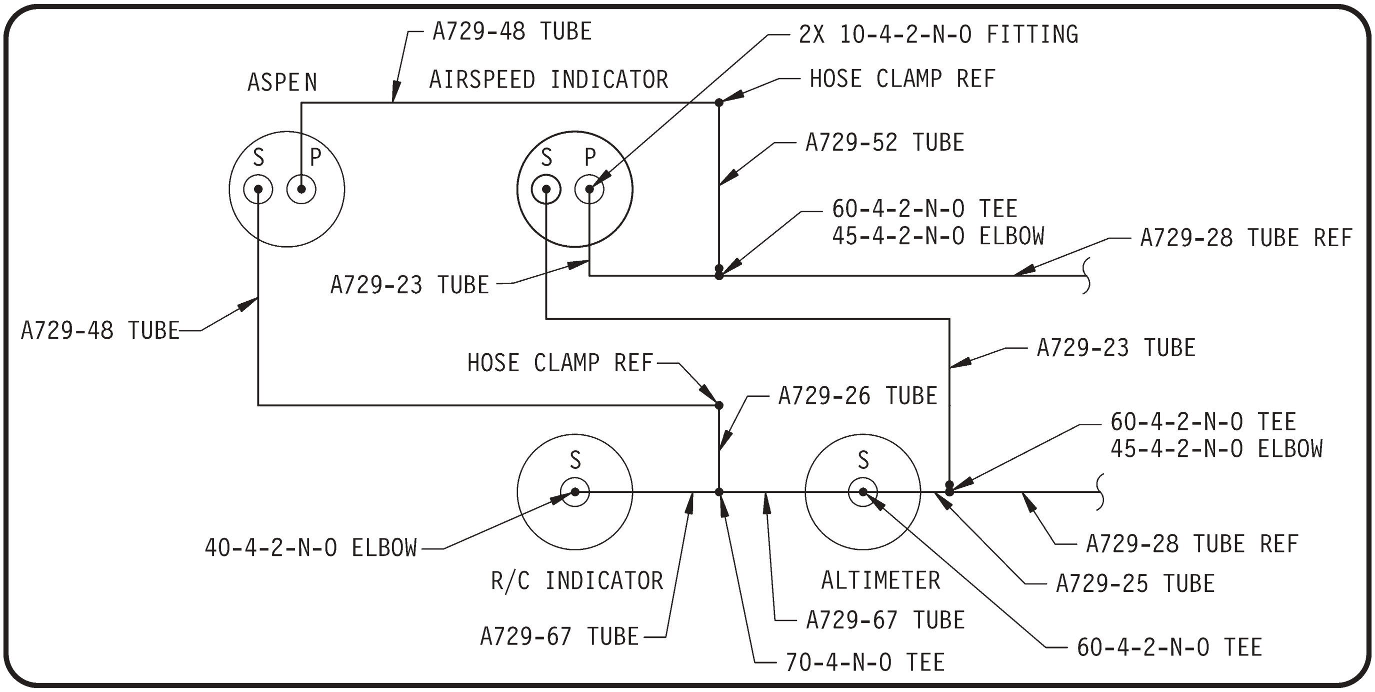

FIGURE 95-8 EIGHT-INSTRUMENT CONSOLE WITH ASPEN PFD PITOT-STATIC SCHEMATIC

95-73 Aspen EFD500H & EFD1000H Display(s) Installation

A. Description

R66 options include a single screen Aspen PFD, or a dual-screen Aspen PFD and MFD.

The Aspen PFD (Primary Flight Display) is an LCD unit with displays for attitude, altitude, airspeed, heading, and optional NAV (HSI/CDI). The Aspen PFD is a situational awareness aid, to be used in conjunction with required VFR instruments (altimeter, airspeed indicator, and magnetic compass).

The standard Aspen PFD installation configures the lower half of the display as a directional gyro. An optional installation configures the lower half of the display to a Horizontal Situation Indicator (HSI). Primary GPS position data is provided by GTN-series GPS. Heading and outside air temperature data is received from the Aspen remote sensor module (RSM). The RSM provides backup GPS position data if primary GPS fails.

The Aspen MFD (Multifunction Display) is an LCD unit with displays for moving map navigation data, terrain, and traffic. Terrain and traffic may also be overlaid on moving map. GPS position data is provided by Garmin GTN-series GPS for moving map and terrain displays. Aspen MFD also includes an internal terrain database. TIS-A traffic data may be received from Garmin GTX330 transponder for moving map display.

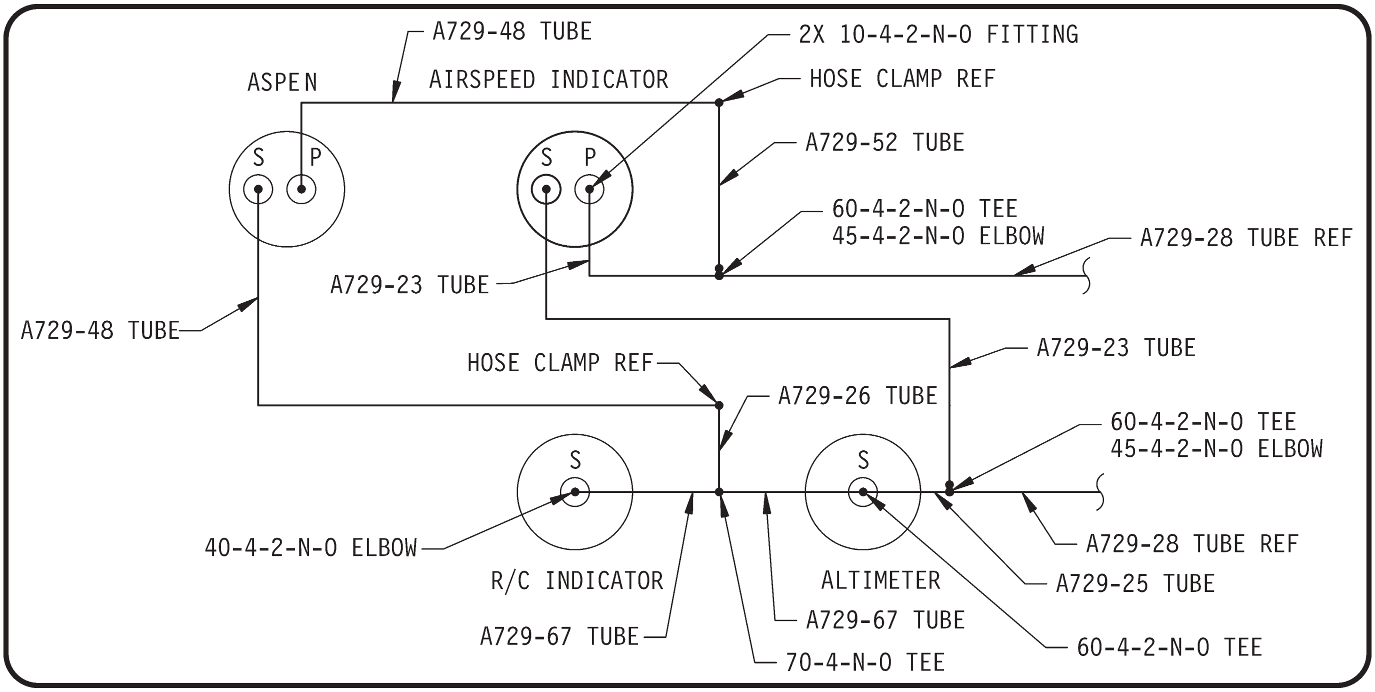

FIGURE 95-9 SIX-INSTRUMENT CONSOLE WITH ASPEN PFD PITOT-STATIC SCHEMATIC

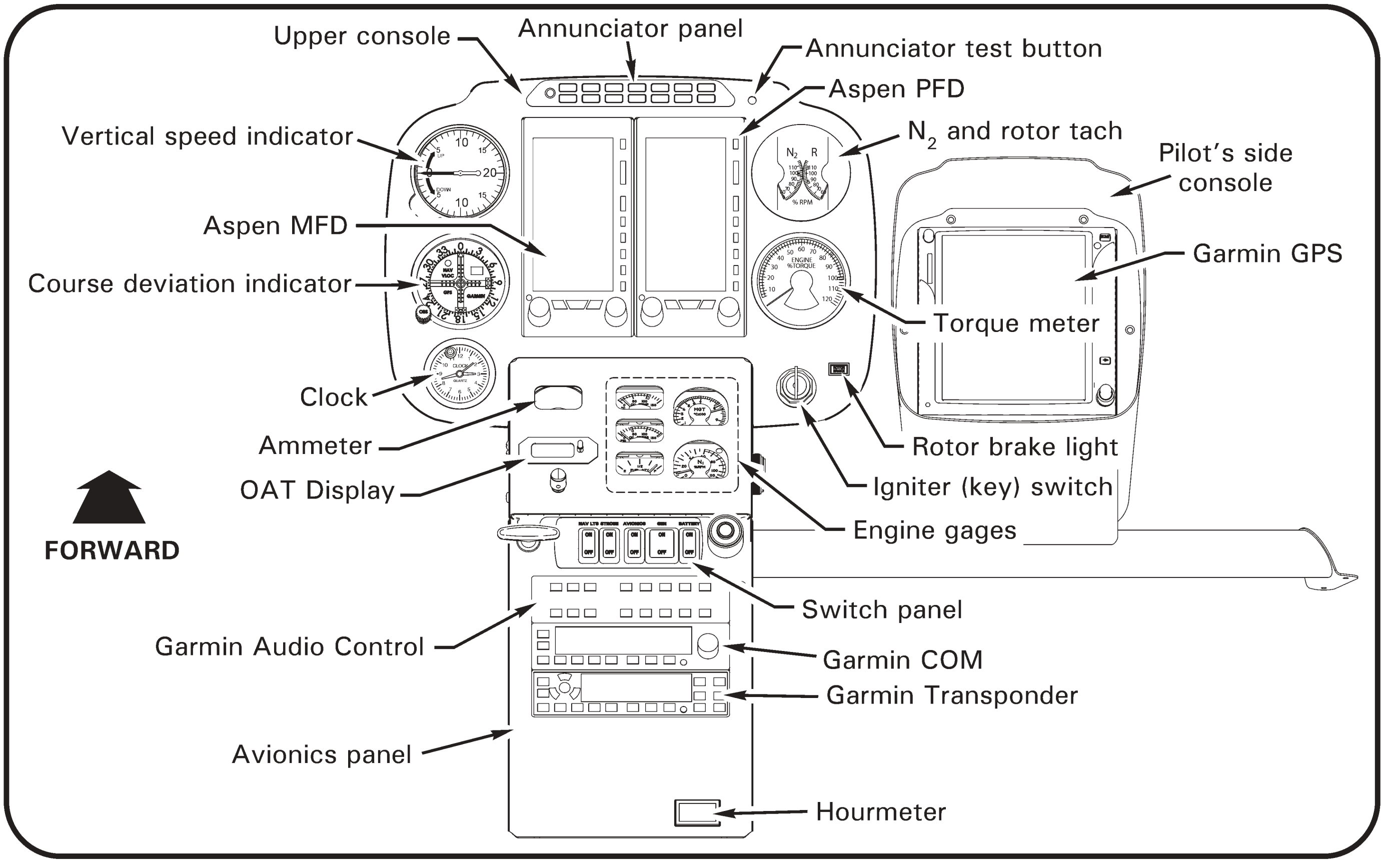

FIGURE 95-10 EIGHT-INSTRUMENT CONSOLE WITH ASPEN PFD AND MFD

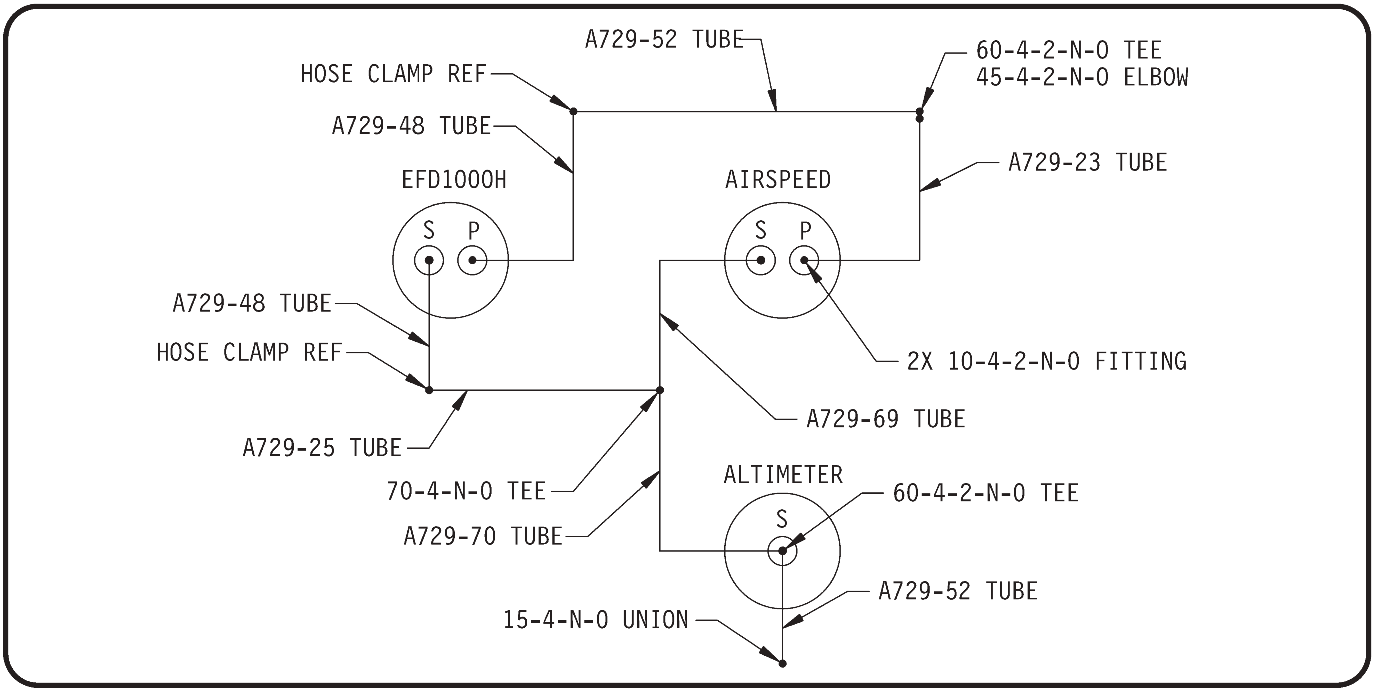

FIGURE 95-11 EIGHT-INSTRUMENT CONSOLE WITH ASPEN PFD AND MFD PITOT-STATIC SCHEMATIC

95-73 Aspen EFD500H & EFD1000H Display(s) Installation (continued)

B. Schematics

Refer to Figure 98-19 for Aspen EFD500H Display Installation electrical schematic, and Figure 98-18 for Aspen EFD1000H Display Installation electrical schematic.

Refer to Figures 95-3, 95-8, and 95-9 for Aspen PFD pitot-static schematic, and Figures 95-3 and 95-11 for Aspen MFD pitot-static schematic.

C. Removal

1. Turn battery switch off and pull-out EFIS circuit breaker (7.5 amp) on circuit breaker panel.
2. Gently depress blue tab(s) at top of Aspen PFD/MFD to release display(s) from mounting bracket(s).
3. PFD only: Disconnect pitot and static lines from display using quick-disconnect couplers. Temporarily cap pitot and static line fittings at display and in aircraft to prevent contamination.
4. Loosen screws securing airframe wiring harness connector(s) to display(s), unplug connector(s), and remove display(s).

D. Installation

1. Turn battery switch off and pull-out EFIS circuit breaker (7.5 amp) on circuit breaker panel.
2. Plug airframe wiring harness connector(s) into Aspen PFD/MFD display(s) and tighten screws. Verify security.
3. PFD only: Remove temporary fitting caps and connect pitot and static lines to display using quick-disconnect couplers.
4. Insert display(s) into mounting bracket(s) until blue tab(s) snap(s) into place. Verify security.
5. Push-in EFIS circuit breaker (7.5 amp) on circuit breaker panel. Turn battery & avionics switches on.
6. Perform appropriate functional checks per Aspen EFD1000H PFD / EFD500H MFD Pilot's Guide. Turn battery and avionics switches off.
7. Perform pitot-static leak check.

95-73 Aspen EFD500H & EFD1000H Display(s) Installation (continued)

E. Remote Sensor Module (RSM) Antenna

> NOTE
> Do not use magnetized tools.

Removal

1. Turn battery switch off and pull-out EFIS circuit breaker (7.5 amp) on circuit breaker panel.
2. Refer to § 6-80 for antenna locations. Using plastic scraper, remove B270-1 sealant from around EFIS antenna at corners where it attaches to tailcone.
3. Cut and discard ty-raps as required and disconnect antenna cable at connectors (secured to frame). Remove screws securing antenna and antenna ground wire to tailcone and remove antenna.

Installation

1. Turn battery switch off and pull-out EFIS circuit breaker (7.5 amp) on circuit breaker panel.
2. Remove paint & primer from antenna and antenna ground wire mating surfaces to ensure electrical ground.
3. Install screws securing antenna and antenna ground wire to tailcone. Verify security.
4. Apply small bead B270-1 sealant (0.1 inch max in height) around antenna at corners where it attaches to tailcone and allow to dry.
5. Connect antenna cable at connectors; secure to frame using ty-raps. Verify security.
6. Perform ground checks per Part D steps 5 and 6.

F. Scheduled Maintenance and Inspections

Maintenance is on condition. Contact Aspen Avionics at www.aspenavionics.com for instructions for continued airworthiness.

> NOTE
> Refer to § 97-60 for avionics software information.

G. Special Maintenance and Inspections

1. Turn battery and avionics switches off. Open circuit breaker panel and upper console.
2. Inspect condition of and verify no obvious damage to Aspen displays, pitot-static lines, metal braiding, copper bus bars, circuit breaker, and wiring. Verify no loose, chafed, or broken wires or terminals. Verify no evidence of arcing. Verify equipment security.
3. Secure circuit breaker panel and upper console. Perform ground checks per Part D steps 5 and 6.

CHAPTER 96

ELECTRICAL SYSTEM

Section	Title	Page
96-00	Description	96.1
96-10	Battery	96.3
96-11	Lead-Acid Battery Installations	96.3
96-12	Lithium-Ion Battery Installation	96.5
96-20	External Power	96.9
96-30	Starter and Ignition System	96.9
96-40	Lighting System	96.10
96-50	Annunciator Panel	96.10
96-60	Low Rotor RPM Warning Unit Adjustment	96.12
96-70	Audio System	96.12
96-80	Engine Monitoring Unit (EMU)	96.13
96-90	Emergency Locator Transmitter (ELT)	96.14
96-100	Electrical Load Analysis	96.15
96-110	Audio Alerts	96.18
96-120	Cockpit Camera	96.18

Intentionally Blank

CHAPTER 96

ELECTRICAL SYSTEM

96-00 Description

CAUTION
The installation of electrical devices can affect the accuracy and reliability of the electronic tachometer.

A 28-volt DC electrical system is standard. Primary system components are a sealed lead-acid battery, a starter-generator, and a generator control unit. The battery is located beneath the left front seat or in a compartment in the left side of the baggage compartment.

The circuit breaker panel is on the ledge just forward of the left front seat. Breakers are marked to indicate function and amperage and are of the push-to-reset type.

The battery switch controls the battery relay which connects the battery to the electrical system. A wire protected by a fuse near the battery bypasses the battery relay to allow the tachometers and clock to receive battery power with the battery switch OFF.

The avionics switch controls power to avionics. This allows avionics to be switched OFF via a single switch. Having sensitive electrical equipment off when the generator is switched ON protects against voltage spikes.

An ammeter indicates total generator output. A digital voltmeter which reads main bus voltage at the circuit breaker panel is incorporated as part of the OAT indicator. Normal indication is 27.3 to 28.7 volts with the generator ON.

A generator control unit (GCU) controls starter-generator function. Below 58 percent N_1 RPM, the GCU is in start mode regardless of generator switch position. Above 58 percent, the GCU automatically switches to generate mode. The generator switch should normally be off for starting to prevent applying generator load to the engine before reaching idle RPM.

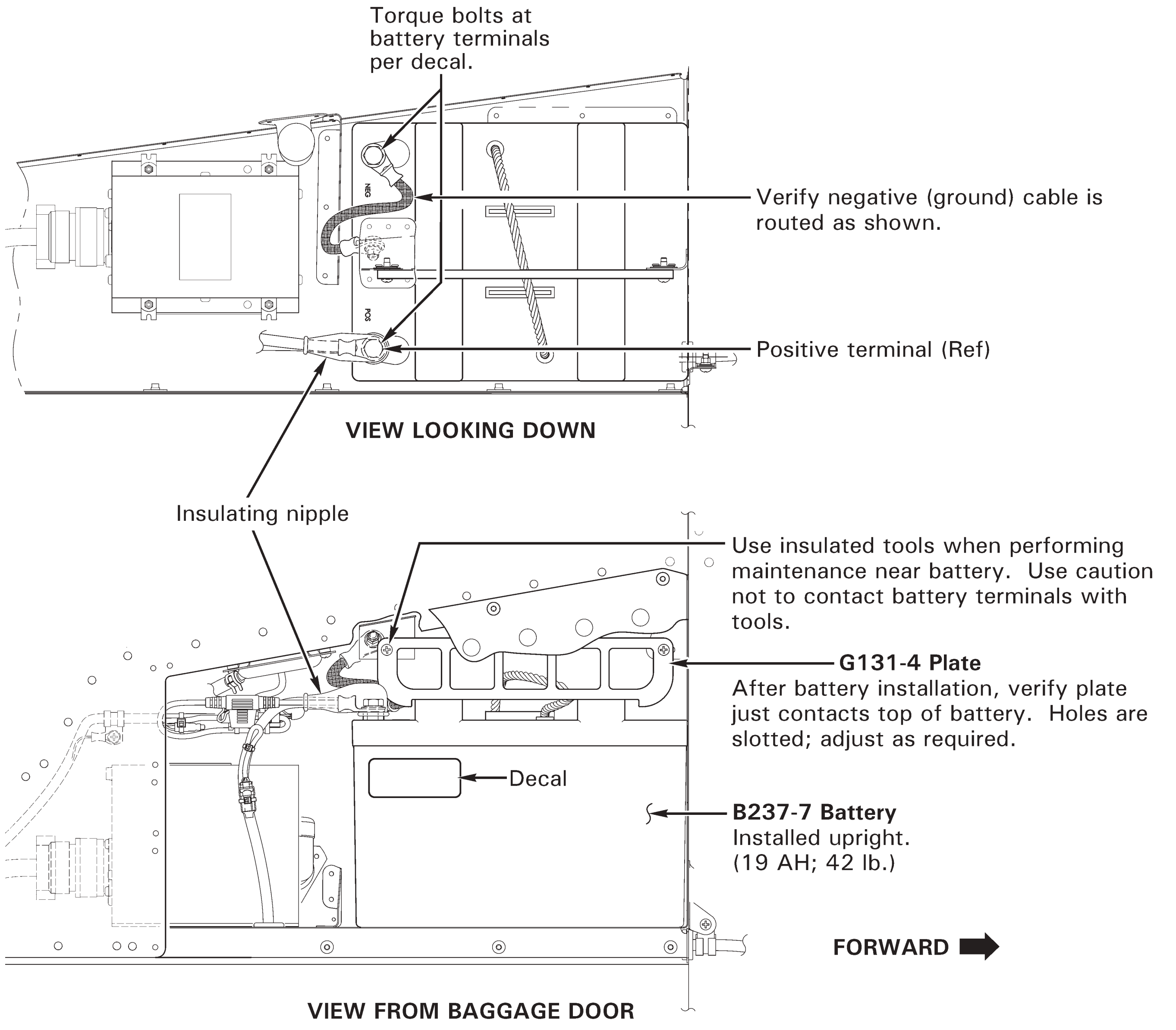

FIGURE 96-1A B237-7 (LEAD-ACID) BATTERY INSTALLATION

96-10 Battery

96-11 Lead-Acid Battery Installations

NOTE
Refer to Concorde Battery Corporation's Owner/Operator's Manual, and Instruction for Continued Airworthiness for battery maintenance procedures.

CAUTION
B237-7 battery (19 AH) weighs 42 lb and B237-8 battery (25 AH) weighs 52 lb including electrolyte. Carefully remove/install battery using handle provided to prevent injury.

CAUTION
Use insulated tools when performing maintenance near battery. When removing or installing G131-2 and G131-4 plate, use caution not to contact battery terminals with tools.

CAUTION
To minimize risk of electrical discharge: When disconnecting battery, disconnect negative (ground) cable from battery first, then the positive cable. When connecting battery, connect positive cable to battery first, then the negative (ground) cable.

A. Disconnecting and Removing Battery

1. Turn battery switch off. Open baggage compartment door. Remove auxiliary fuel tank per § 28-51, if installed.
2. Refer to Figure 96-1A & 96-1B. Remove G248-8 cover assembly.
3. Remove hardware securing negative (ground) cable to battery negative terminal (B237-7 battery) or G131-5 terminal assembly (B237-8 battery).
4. Remove hardware securing positive cable to battery positive terminal. Carefully remove battery. Remove G131-5 terminal assembly (B237-8 battery), as required.

B. Installing and Connecting Battery

1. Turn battery switch off. Open baggage compartment door. Refer to Figure 96-1A & 96-1B.
   a. If B237-7 battery was removed and B237-8 battery is being installed: Remove G131-4 plate and install G131-2 plate as shown; verify security. If not previously installed, verify battery terminal is clean and install G131-5 terminal assembly; special torque bolt per battery decal. Carefully install B237-8 battery.

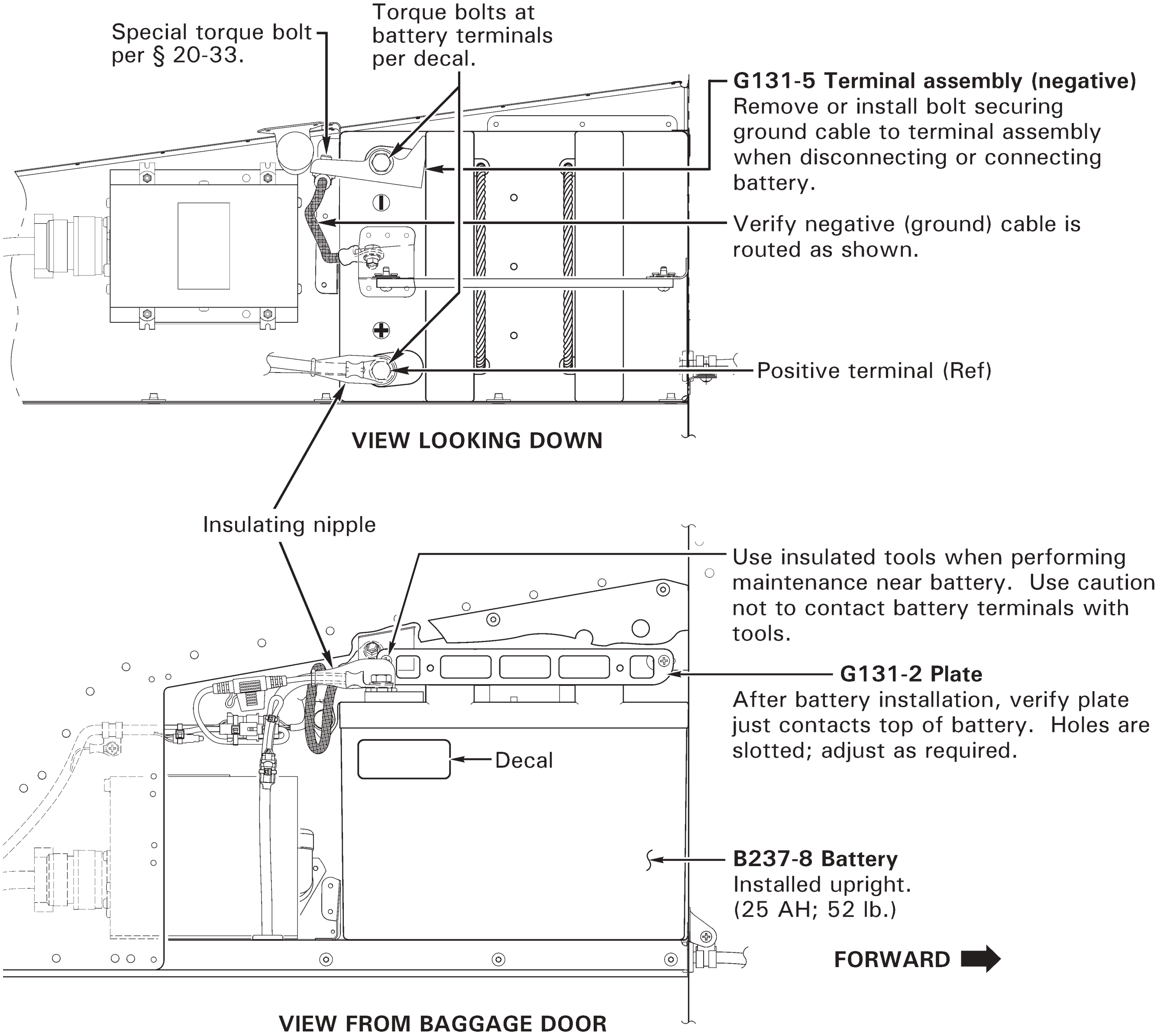

FIGURE 96-1B B237-8 (LEAD-ACID) BATTERY INSTALLATION

96-11 Lead-Acid Battery Installations (continued)

B. Installing and Connecting Battery (continued)

1. b. If B237-8 battery was removed and B237-7 battery is being installed: Remove G131-2 plate and install G131-4 plate as shown; verify security. Carefully install B237-7 battery.

   c. If battery being installed is same part number as battery removed: Verify installation and security of parts. Carefully install battery.

2. Verify G131-2 or G131-4 plate just contacts top of battery (holes are slotted). Adjust as required; verify security.

3. Verify negative (ground) cable is attached to airframe and routed as shown. Adjust as required.

4. Verify battery terminal is clean and install positive cable on battery positive terminal. Special torque bolt per battery decal and torque stripe per Figure 5-1. Slide insulating nipple over attached terminal.

5. Verify battery terminal is clean and install negative (ground) cable on battery negative terminal (B237-7 battery) or G131-5 terminal assembly (B237-8 battery), routing negative (ground) cable as shown. Special torque bolt per battery decal and torque stripe per Figure 5-1.

6. Install G248-8 cover assembly; verify security. Install auxiliary fuel tank per § 28-51, as required. Close baggage compartment door.

7. a. If B237-7 battery was removed and B237-8 battery was installed: Revise Weight and Balance Record in R66 Pilot's Operating Handbook (POH) Section 6 to incorporate the following data:

   Subtract:

Item	Weight	Long. Arm	Long. Moment	Lat. Arm	Lat. Moment
B237-7 Battery	42.00 lb	96.88 in.	4068.96 in.-lb	-20.87 in.	-876.54 in.-lb

   Add:

Item	Weight	Long. Arm	Long. Moment	Lat. Arm	Lat. Moment
B237-8 Battery	52.00 lb	96.88 in.	5037.76 in.-lb	-21.73 in.	-1129.96 in.-lb

   b. If B237-8 battery was removed and B237-7 battery was installed: Revise Weight and Balance Record in R66 Pilot's Operating Handbook (POH) Section 6 to incorporate the following data:

   Subtract:

Item	Weight	Long. Arm	Long. Moment	Lat. Arm	Lat. Moment
B237-8 Battery	52.00 lb	96.88 in.	5037.76 in.-lb	-21.73 in.	-1129.96 in.-lb

   Add:

Item	Weight	Long. Arm	Long. Moment	Lat. Arm	Lat. Moment
B237-7 Battery	42.00 lb	96.88 in.	4068.96 in.-lb	-20.87 in.	-876.54 in.-lb

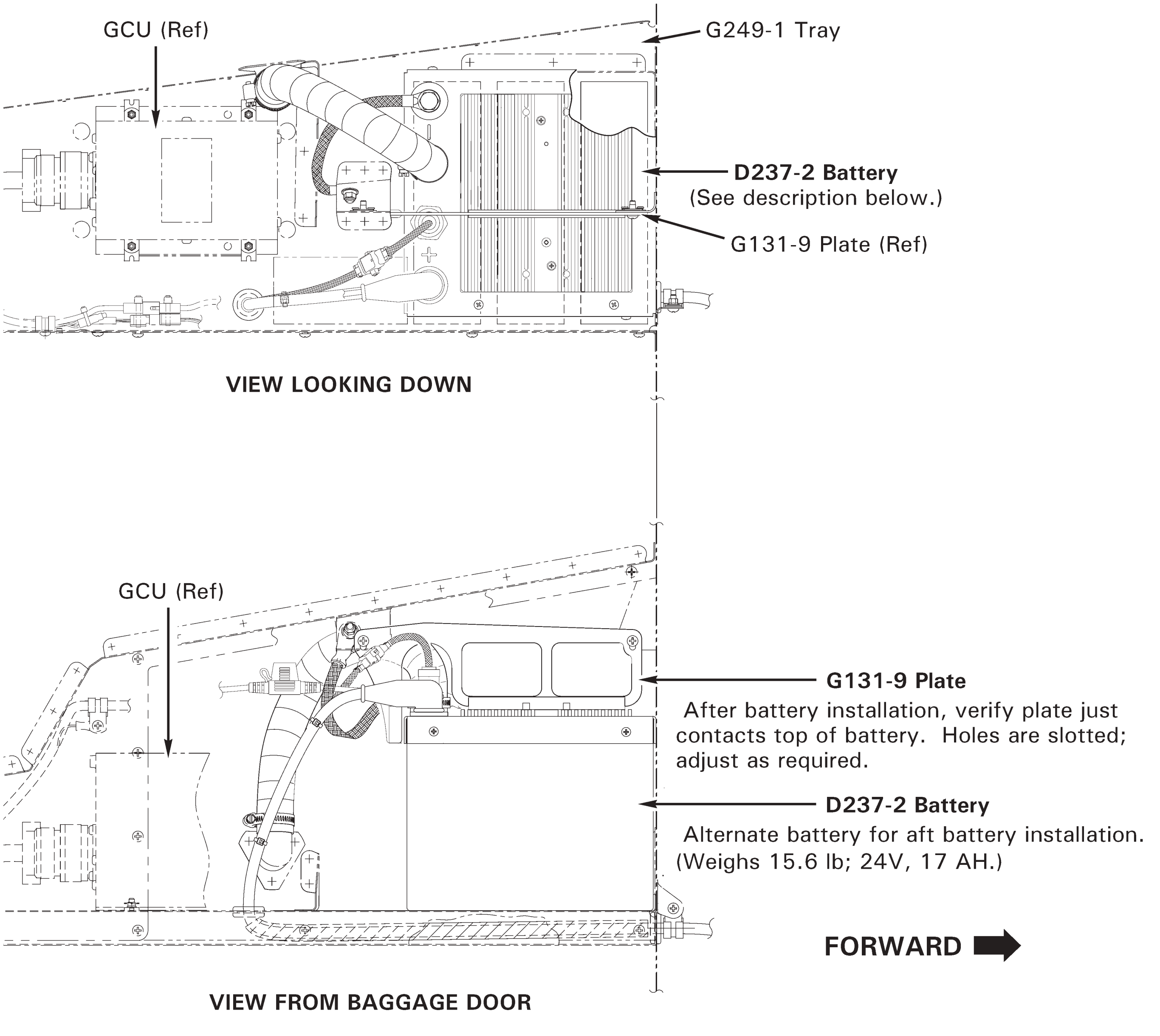

FIGURE 96-2 LITHIUM-ION BATTERY INSTALLATION

96-12 Lithium-Ion Battery Installation

A. Description

An optional 17 amp-hour lithium-ion battery replaces the lead-acid main battery. The battery includes built-in circuitry that monitors temperature, voltage, and current draw and manages battery charge and discharge. The circuitry automatically disables charge and/or discharge if any electrical or thermal problems are detected. The battery uses lithium-iron-phosphate chemistry which is less susceptible to thermal runaway than some other lithium battery chemistries.

The metal battery case is designed to contain any heat or gases generated within the battery and is vented overboard on the left side of the aircraft. No venting should occur during normal operation.

Two annunciator panel segments, BATT FAULT and BATT HEATER, indicate battery status. Earlier aircraft have two indicator lights located to the left of the annunciator panel.

BATT FAULT illuminates if the battery has an over- or under-voltage condition, an over-temperature condition, or if current draw exceeds limits. A flashing light indicates a recoverable fault. The light may go out if the fault corrects itself (e.g. temperature decrease) or may go out as a result of a power cycle at the next landing. A steady light indicates battery maintenance or replacement may be required. The emergency procedure for a fault light (flashing or steady) is to land as soon as practical. The generator will continue to supply electrical power during the landing.

The battery incorporates an internal heater for cold weather operation. The heater attempts to maintain a battery temperature of at least 50°F (10°C). When the battery is switched ON, BATT HEATER illuminates while the heater is warming the battery and extinguishes when the battery is warm enough to attempt an engine start. On very cold days, the heating cycle may take 10 minutes or more. The heater light is disabled while the engine is running but the heater will continue to function as long as the battery switch is ON.

If a start is attempted with insufficient charge, the battery's safety monitors may interrupt power. In the event of a power interruption, a small backup power supply will allow the MGT and N_1 gages as well as the Engine Monitoring Unit to continue functioning. The backup power supply also provides power to the map light. The backup power supply consists of two 9-volt batteries installed in the compartment under the left front seat. The 9-volt batteries are non-rechargeable and should be replaced every 12 months.

> NOTE
>
> Backup batteries will discharge if battery switch is ON and main battery is discharged or disconnected. Backup batteries should be replaced if battery switch was left ON without main battery power.

96-12 Lithium-Ion Battery Installation (continued)

A. Description (continued)

NOTE

Refer to True Blue Power Installation Manual and Operating Instructions for battery maintenance procedures.

CAUTION

To minimize risk of electrical discharge: When disconnecting battery, disconnect negative (ground) cable from battery first, then the positive cable. When connecting battery, connect positive cable to battery first, then the negative (ground) cable.

B. Disconnecting and Removing Battery

1. Remove auxiliary fuel tank per § 28-51, if installed.
2. Turn battery switch off. Open baggage compartment door.
3. Remove hardware securing G248-8 cover assembly and remove cover.
4. Loosen clamp securing vent hose to battery and pull hose off of battery.
5. Disconnect airframe wiring plug from battery's comm connector.
6. Remove hardware securing negative (ground) cable to battery negative terminal.
7. Slide nipple away from battery positive terminal and remove hardware securing positive cable to battery positive terminal. Carefully remove battery.

96-12 Lithium-Ion Battery Installation (continued)

C. Installing and Connecting Battery

1. Remove auxiliary fuel tank per § 28-51, if installed.
2. Perform pre-installation inspection and completely charge battery per True Blue Power Installation Manual and Operating Instructions. If battery is new, also perform visual inspection, charging, capacity check, and return to service per True Blue Power Installation Manual and Operating Instructions.
3. Turn battery switch off. Open baggage compartment door.
4. Refer to Figure 96-2. Verify security, proper orientation, and installation of G131-9 plate. Carefully install battery.
5. Verify G131-9 plate just contacts top of battery (holes are slotted). Adjust as required.
6. Verify battery terminal surfaces are clean to ensure electrical conductivity. Install positive cable on battery positive terminal and install battery hardware. Special torque terminal bolt as noted on battery label, and torque stripe per Figure 5-1. Slide nipple over terminal.
7. Install negative (ground) cable to battery negative terminal and install battery hardware. Special torque terminal bolt as noted on battery label, and torque stripe per Figure 5-1.
8. Install G248-8 cover assembly and install hardware. Verify security. Close and latch baggage compartment door.

D. Scheduled Maintenance and Inspections

Every 6 Months: If battery is unused for more than 6 months, either installed in helicopter or in storage, completely charge battery per True Blue Power Installation Manual and Operating Instructions.

Every 12 months: Replace two, non-rechargeable, 9-volt batteries mounted under the co-pilot's seat every annual inspection.

Every 24 Months: Perform visual inspection, charging, capacity check, and return to service per True Blue Power Installation Manual and Operating Instructions every 24 months from date of aircraft delivery or subsequent new battery installation.

Intentionally Blank

96-12 Lithium-Ion Battery Installation (continued)

E. Special Maintenance and Inspections

No other battery maintenance other than routine maintenance specified by True Blue Power is permitted.

Operators are encouraged to review important safety information regarding handling, shipping, storage instructions, estimated unit life, and disposal instructions provided in True Blue Power Installation Manual and Operating Instructions.

Note: In accordance with industry and regulatory standards, the TB17 Lithium-ion battery will be shipped with a state of charge (SOC) not to exceed 30% of rated capacity.

96-20 External Power

A 28-volt MS3506-compatible external power receptacle is located inside the right engine cowl door. When the battery is switched ON, the external power relay and the battery relay both close, connecting external power to the aircraft electrical system and battery The external power relay will not close if reverse polarity is provided to the receptacle.

A separate wire from the external power receptacle to the battery bypasses the external power and battery relays. This wire allows battery charging via the external receptacle with the battery switch OFF. A 10-amp circuit breaker at the receptacle opens if current exceeds normal charging levels, and a diode provides polarity protection.

96-30 Starter and Ignition System

A single starter-generator is used for engine starting and electrical power generation. A generator control unit (GCU) controls starter-generator function. During a start, the GCU latches the starter on until N_1 reaches 58 percent RPM. Therefore, the pilot is not required to hold the start button down throughout the start sequence. Above 58 percent N_1 RPM, the GCU automatically switches out of start mode, but the generator switch should not be switched ON until idle RPM stabilizes to prevent the generator load from bringing the RPM down.

When the igniter key switch is in the enable position, depressing the start button causes a normal start sequence with the starter latching on and the igniter firing. Above 58 percent N_1 RPM, the igniter will fire while the start button is depressed.

When the igniter switch is OFF, the engine can be motored by the starter by depressing the start button without the starter latching or the igniter firing. This is useful for performing a compressor wash or rinse. If the igniter is switched OFF during a start, the starter will disengage. If the igniter is switched OFF while the engine is running, the engine will continue to run; however, this is not recommended.

> NOTE
>
> Start button is active when battery switch is ON, even if igniter switch is OFF. Rotor brake may be left engaged after shutdown to disable start button.

96-40 Lighting System

A red anti-collision light is installed on the tailcone and is controlled by the strobe switch on the instrument console. Position lights are installed on each side of the cabin and in the tail and are controlled by the nav lights switch. A light at the top of the windshield and post lights illuminate the instrument panel. Panel lighting is active when the nav lights switch is ON and lighting is dimmed via the knob above the nav lights switch. An overhead map light mounted on a swivel is controlled by an adjacent switch with high and low settings. The map light may be used for emergency lighting of the instrument panel. An additional cabin light with an adjacent switch is located just aft of the map light. The map and cabin lights are not connected to the dimmer circuit.

Two long-life, high intensity discharge (HID) landing lights are installed in the nose. One wide-angle and one narrow-beam light are used to increase lighted area. The landing light switch is located on the cyclic center post.

NOTE

Continuous operation of landing and position lights in flight is recommended to promote collision avoidance.

An optional flashing light may be mounted on the tailcone in addition to the standard anti-collision light. The optional light is controlled by an additional position on the strobe switch and may be turned on or off anytime at pilot discretion.

96-50 Annunciator Panel

The annunciator panel consists of illuminated segments located at the top of the main instrument panel. If a caution or warning condition occurs, the appropriate segment(s) illuminate indicating the nature of the problem.

The CHIP segments are illuminated by magnetic chip devices in each gearbox which collect metallic particles in order to complete an electric circuit. The engine gearbox has two magnetic chip detectors, either of which can illuminate the ENGINE CHIP segment.

The MR TEMP/PRESS segment is illuminated by either the temperature switch or oil pressure switch at the main gearbox. The ENGINE FIRE segment is illuminated by a temperature switch in the engine compartment. The ENGINE OIL segment is activated by a pressure switch which is independent of the oil pressure sender. The ANTI-ICE segment illuminates via a pressure switch in the engine anti-ice air line. The GEN segment illuminates when the generator is disconnected from the main electrical bus.

The LOW FUEL segment is illuminated by a float switch in the tank which is independent of the fuel quantity sender. The FUEL FILTER segment illuminates when a pressure switch detects excessive pressure drop across the fuel filter. The LOW RPM segment is illuminated by a sensor measuring driveline speed at the aft end of the main gearbox. A horn sounds simultaneously with illumination of the LOW RPM segment when rotor speed is below 95% RPM. The horn is disabled when the collective is fully down.

96-50 Annunciator Panel (continued)

A. Description

The COWL DOOR segment is illuminated when the fuel filler cowl door, the right engine cowl door (which accesses the external power receptacle), or the baggage door is not closed. The AIR FILTER segment illuminates when pressure drop across the filter opens bypass doors, allowing unfiltered air to the engine. The EMU (Engine Monitoring Unit) segment indicates the EMU status with either steady, flashing, or no illumination. The EMU segment will illuminate only when the test button is depressed.

A push-to-test button on the instrument panel should cause all segments on the annunciator panel, as well as the ROTOR BRAKE light, to illuminate when depressed. The LOW FUEL segment takes approximately two seconds before it illuminates due to a time delay in the circuit (time delay prevents sloshing fuel from giving a false indication.) The EMU segment takes approximately ten seconds to perform a self-test after the battery is switched ON before it will illuminate. The test button may be used on the ground or in flight to verify all circuits are functioning.

B. Troubleshooting

1. Turn battery switch off. Access EMU behind right, aft seatback assembly.
2. Disconnect EMU from airframe electrical harness.
3. Using an insulated jumper, connect airframe wire -2044 (pin 13 on airframe connector to EMU) to a convenient airframe ground.
4. Turn battery switch on. Depress push-to-test switch adjacent to annunciator panel and observe EMU annunciator segment response:
   a. If EMU annunciator segment illuminates: Turn battery switch off and disconnect jumper. Replace EMU per § 71-43.
   b. If EMU annunciator segment remains extinguished: Turn battery switch off and disconnect jumper. Proceed to step 5.
5. Turn battery switch on. Depress push-to-test switch and verify system voltage at wire -2044 (pin 13 on EMU airframe connector). Turn battery switch off. If there is no system voltage at wire -2044, disconnect F695-4 tester assembly from airframe electrical harness. Using an insulated jumper, connect airframe wire -2062 (pin 38 on airframe connector to F695-4/F694-1 circuit board) to a convenient airframe ground.
6. Turn battery switch on. Depress push-to-test switch adjacent to annunciator panel and observe EMU annunciator segment response:
   a. If EMU annunciator segment illuminates: Turn battery switch off and disconnect jumper. Replace F695-4 tester.
   b. If EMU annunciator segment remains extinguished: Turn battery switch off and disconnect jumper. Proceed to step 7.

96-50 Annunciator Panel (continued)

B. Troubleshooting (continued)

7. Either an open circuit exists along wire -2062 between F695-1 tester and G198-1 annunciator, or G198-1 annunciator panel is faulty. Troubleshoot beginning with Console Connector 1 ("C1"), pin 34 and verifying security of pins on both halves of connector. If no fault is found in connector, verify continuity of wire -2062 at all connections. If no fault is detected in wire -2062 circuit, replace G198-1 annunciator panel.

96-60 Low Rotor RPM Warning Unit Adjustment

The low rotor RPM warning unit is located inside the upper console, mounted to the left vertical panel. Two magnets attached to the main gearbox tail rotor driveline output yoke provide an RPM signal for the warning unit's gearbox-mounted Hall-effect senders. When the collective is at least 0.2 to 0.4 inch (measured at grip) above the full down position and rotor RPM is 95% or less, the warning unit illuminates the Low RPM annunciator segment and sounds two warning horns. Fully lowering the collective will silence both horns, but will not extinguish the annunciator segment. The Low RPM annunciator segment and both horns must remain off above 95% rotor RPM.

To make an adjustment, remove the plastic plug (from a 3/8-inch diameter hole) in the left-vertical panel exterior. Adjust screw on back of warning unit (2 turns equals approximately 1% change).

96-70 Audio System

A five-place audio system is standard. An audio control panel allows control of communication radios, intercom, and stereo-capable auxiliary audio (e.g. music) input.

The system has four modes of operation. In normal mode, all occupants hear incoming and outgoing radio communications, intercom, and auxiliary audio. The pilot and copilot can both transmit on the selected radio.

In crew mode, the pilot and copilot are isolated from rear seat occupants. The crew does not hear rear seat intercom or auxiliary audio and rear seat occupants do not hear crew intercom or radio communications.

In pilot isolate mode, the pilot is isolated from all other occupants. The copilot is grouped with the rear seat occupants for intercom and auxiliary audio.

In emergency mode, the pilot transmits and receives on the number one radio only (regardless of audio panel switch position). All other audio is disabled.

The first three modes are selectable via the audio control panel. Emergency mode occurs if power to the panel is lost. In addition to the mode control, the audio panel has controls for squelch, volume, and selection of transmit and receive radios. A detail description of these controls can be found in the audio system operation manual.

96-70 Audio System (continued)

Headset jacks are located in the ceiling near each seat. Pilot and copilot intercom and transmit are controlled via trigger switches on the cyclic grips. The trigger has two detents; the first detent activates the intercom and the second detent transmits. Additional intercom buttons are located on the forward side of the rear seats and on the left forward floor. Intercom may also be set to be voice activated. Auxiliary audio may be plugged in to a jack on the forward face of the circuit breaker panel. In normal mode, auxiliary audio is automatically muted during radio communication.

96-80 Engine Monitoring Unit (EMU)

Refer to Section 71-43 for EMU maintenance procedures.

The Engine Monitoring Unit (EMU) is a digital recording device mounted behind the right rear seatback panel. The EMU continuously monitors N_1, N_2, engine torque, and MGT. EMU status is indicated by the EMU segment on the annunciator panel. The EMU segment will only illuminate while the annunciator panel test button is depressed. The EMU requires approximately ten seconds to initialize after the aircraft battery is switched ON. Once initialization is complete, steady illumination of the annunciator means normal EMU operation. A slowly flashing indication (once every two seconds) is given if the EMU detects a fault in its senders or circuitry. A fast flashing indication (four times per second) is given if the EMU has detected an exceedance. A fault or exceedance indication should be investigated and reset by a qualified mechanic prior to further flight.

The EMU records exceedances of Rolls-Royce engine limits, not airframe operating limits as given in Section 2. The EMU will record an exceedance if any of the following are exceeded:

MGT during start:	999°C, or 927°C for 1 second, or 810°C for 10 seconds.
MGT engine running:	843°C, or 782°C for 6 seconds, or 706°C for 5 minutes.
N_1:	106%, or 105% for 15 seconds.
N_2:	110%, or 105% for 15 seconds. 78% to 88% for 60 seconds over 38% torque.
Torque:	122% for 15 seconds, or 104% for 5 minutes.

The EMU also records a start cycle when N_1 exceeds 30% and MGT is at least 343°C.

The EMU is intended to be used only as a maintenance aid. It is the pilot's responsibility to report any observed exceedances and the operator's responsibility to maintain a record of engine starts and time in service.

96-90 Emergency Locator Transmitter (ELT)

Refer to Section 25-61 for ELT programming instructions and maintenance procedures.

The Emergency Locator Transmitter (ELT) installation consists of a transmitter with internal battery pack, an external antenna, and a remote switch/annunciator. The transmitter is mounted to the upper steel tube frame and is accessible through the spring loaded air intake door in the right-side cowl. The remote switch/annunciator is located left of the cyclic stick.

The ELT is operated by a switch on the transmitter and by the remote switch. The transmitter switch has been set in the ARM position at installation and should always be in this position for flight. The remote switch/annunciator is a three position switch with indicator light. This switch should be in the ARMED position for flight. With both switches set to armed, the ELT will begin transmitting when subjected to a high "G" load. When the unit is transmitting, the red indicator light illuminates.

Moving the remote switch to ON activates the transmitter. Use the ON position if an emergency landing is imminent and time permits.

If the ELT is inadvertently activated, use the momentary RESET & TEST position of the remote switch to stop transmission and reset the unit. The red indicator will extinguish when unit is reset.

For more detailed instructions on ELT operation, maintenance, and required tests, refer to manufacturer's instructions supplied with the unit.

96-100 Electrical Load Analysis

COMPONENT	QTY	CONTINUOUS AMPS EACH	INTERMITTENT AMPS EACH	CONTINUOUS TOTAL	INTERMITTENT TOTAL
MAIN BUS					
WARNING LT PANEL	1	0.006	0.320	0.006	0.320
ROTOR BRAKE LT	1	---	0.044	0.000	0.044
MAPLIGHT	1	0.020	0.020	0.020	0.020
INTERIOR DOME LT	1	0.020	0.020	0.020	0.020
OAT GAGE	1	0.150	0.150	0.150	0.150
ENGINE TORQUEMETER	1	0.050	0.050	0.050	0.050
INSTRUMENT CLUSTER	1	0.375	0.375	0.375	0.375
MOP SENDER	1	0.025	0.025	0.025	0.025
TORQ SENDER	1	0.025	0.025	0.025	0.025
LOW RPM UNIT W/HORN	1	0.045	0.160	0.045	0.160
AA12S-600 AUDIO PANEL	1	1.000	1.000	1.000	1.000
N_2 GOVERNOR SYSTEM	1	0.000	0.087[1]	0.000	0.087[1]
N_2 GOV ACTUATOR @ 12V	1	---	0.150		
N_2 GOV RELAY @ 12V	1	---	0.010		
ANTI-ICE SOLENOID	1	0.670	0.670	0.670	0.670
HEATED PITOT	1	4.000	4.000	4.000	4.000
ENGINE HOUR METER	2	0.015	0.015	0.030	0.030
HYD CONTROL SOLENOID	1	---	0.800	0.000	0.800
ENGINE MONITORING UNIT	1	0.180	0.180	0.180	0.180
AVIONICS RELAY	1	---	0.060	0.000	0.060
LOW FUEL RELAY	1	---	0.010	0.000	0.010
WARNING LIGHT TEST CB	1	---	0.020	0.000	0.020
TACH PWR TEST RELAY	1	---	0.060	0.000	0.060
BOSE HEADSET	5	0.025	0.500	0.125	2.500
AUX POWER PLUG	1	2.000	2.000	2.000	2.000
SUBTOTAL (MAIN BUS)				8.721	12.606

96-100 Electrical Load Analysis (continued)

COMPONENT	QTY	CONTINUOUS AMPS EACH	INTERMITTENT AMPS EACH	CONTINUOUS TOTAL	INTERMITTENT TOTAL
LIGHTS BUS					
LANDING LT BALLAST	2	1.600[3]	5.250[3]	3.200	10.500
LANDING LT RELAY	1	0.060	0.060	0.060	0.060
CIRCUIT BREAKER LTS	1	0.001[3]	0.001[3]	0.001	0.001
INSTRUMENT LT	1	0.500[5]	0.500[5]	0.500[5]	0.500[5]
POST LTS	2	0.040[1]	0.040[1]	0.080	0.080
INTERNAL AVIONICS LTS	6	0.100[1]	0.100[1]	0.600	0.600
VERT CARD COMPASS LT	1	0.050[3]	0.050[3]	0.050	0.050
POSITION LT RH (GREEN)	1	0.250	0.250	0.250	0.250
POSITION LT LH (RED)	1	0.250	0.250	0.250	0.250
POSITION LT TAIL (WHT)	1	0.300	0.300	0.300	0.300
STROBE LIGHT	1	0.670	3.000	0.670	3.000
SUBTOTAL (LIGHTS BUS)				5.961	15.591

COMPONENT	QTY	CONTINUOUS AMPS EACH	INTERMITTENT AMPS EACH	CONTINUOUS TOTAL	INTERMITTENT TOTAL
AVIONICS BUS					
KY196A COM	1	1.000	5.000	1.000	5.000[2]
GNC 420W GPS/COM	1	1.215	4.200	1.215	1.215[2]
GNS 530AW GPS/COM/NAV	1	1.415	4.400	1.415	1.415[2]
GTX 330 XPDR	1	1.640	9.090	1.640	9.090
BLIND ENCODER	1	0.600	0.600	0.600	0.600
AM/FM/CD RCVR	1	1.500	1.500	1.500	1.500
KR87 ADF RCVR	1	0.429	0.429	0.429	0.429
KR22 MARKER BEACON	1	0.040	0.500	0.040	0.500
AVIONIC BLOWER	1	0.180	0.180	0.180	0.180
PILOT AV BLOWER	1	0.100	0.100	0.100	0.100
ELT[4]	1	---	---	---	---
HSI (PICT NAV SYSTEM)	1	1.730	1.730	1.730	1.730
ATTITUDE HORIZON	1	0.270	0.700	0.270	0.700
TURN COORDINATOR	1	0.350	0.350	0.350	0.350
RADAR ALTIMETER	1	0.727	0.727	0.727	0.727
SUBTOTAL (AVIONICS BUS)				11.196	23.536

96-100 Electrical Load Analysis (continued)

COMPONENT	QTY	CONTINUOUS AMPS EACH	INTERMITTENT AMPS EACH	CONTINUOUS TOTAL	INTERMITTENT TOTAL
TACH BUS					
N_2 TACH (INCL REG)	1	0.022[1]	0.022[1]	0.022[1]	0.022[1]
N_2 TACH @ 13.75V	1	0.035	0.035		
ROTOR TACH (INCL REG)	1	0.022[1]	0.022[1]	0.022[1]	0.022[1]
ROTOR TACH @13.75V	1	0.035	0.035		
SUBTOTAL (TACH BUS)				0.044	0.044
COMPONENT	QTY	CONTINUOUS AMPS EACH	INTERMITTENT AMPS EACH	CONTINUOUS TOTAL	INTERMITTENT TOTAL
OTHER EQUIPMENT					
TACH RELAY	1	0.060	0.060	0.060	0.060
CLOCK (DIGITAL)	1	0.003	0.003	0.003	0.003
BATTERY RELAY	1	0.250	6.000	0.250	6.000
START/GEN RELAY	1	0.250	6.000	0.250	6.000
GEN LT RELAY	1	0.010	0.010	0.010	0.010
GEN CONTROL UNIT	1	0.200[4]	2.000[5]	0.200	2.000
IGNITION EXCITER	1	---	1.500	0.000	1.500
EXTERNAL PWR RELAY[2]	1	0.250	6.000	---	---
BAGGAGE COMPARTMENT LT[2]	1	0.020	0.020	---	---
SIGHT GLASS LED[2]	2	0.020	0.020	---	---
LATCHING START RELAY[3]	1	0.060	0.060	---	---
STARTER-GENERATOR[3]	1	---	231.06	---	---
SUBTOTAL (OTHER)				0.773	15.573
TOTAL (MAIN + LIGHTS + AVIONICS + TACH + OTHER)				26.70	67.357
STARTER-GENERATOR MARGIN (160-AMP MAX)				+133.30	+92.657

96-110 Audio Alerts

All R66 helicopters have a low-RPM horn which sounds when rotor RPM is below 95%. The horn is muted when the collective is fully down. On aircraft S/N 1006 and prior, the horn is provided by speakers in the side of the instrument console. On aircraft S/N 1007 and subsequent, a tone generator in the audio system provides the horn through crew headsets.

Aircraft S/N 1007 and subsequent also have audio alerts in the headsets for high rotor RPM and high engine torque/MGT. For high RPM, a warble tone (high/low tone) indicates rotor RPM is approaching 106%. For high engine torque/MGT, a beeping tone indicates torque above 100% or MGT above 782°C (5-minute limits). High torque is indicated by four beeps per second, increasing to 12 beeps per second if torque exceeds 108%. High MGT is indicated by 12 beeps per second. The beep tone will also come on during start if MGT exceeds 860°C, indicating an abnormally hot start.

Test buttons on the instrument panel permit pre-flight or in-flight tests of the high RPM and high torque/MGT tones. For high torque/MGT, depressing the test button give four beeps per second for two seconds followed by 12 beeps per second.

Additional audio alerts may be provided in the headsets depending on optional equipment installed (such as pressure fueling, terrain warnings, traffic warnings, autopilot modes, etc.)

96-120 Cockpit Camera

An optional video camera may be installed in the cabin ceiling. The camera records 4K video, intercom/comm audio, and GPS position both internally and to a removable flash drive inserted in the front of the camera housing. The internal memory retains only recent video and is not user accessible. Recording starts automatically when the helicopter battery is switched on and stops when it is switched off.

Recording to the flash drive can be stopped or audio muted using the record and audio switches on the front of the camera housing. Do not remove the flash drive while a recording is in progress as this will corrupt the video file. To remove a flash drive when the helicopter battery switch is on, first stop the recording using the record switch and wait for the blue light to stop flashing.

A blue flashing light on the camera housing indicates video is being recorded to the flash drive. A green steady light indicates the camera is powered and operating normally. The green light will change to an amber flashing light if an internal camera fault is detected, in which case video may not be recorded.

Video recorded on the flash drive can be viewed on a Windows PC or Mac computer. Video is recorded in sequential 4 GB files with each file approximately 25 minutes in length. Video files are labeled HELICAM_xxxx.MP4, where xxxx is a sequential number. GPS position and altitude are optionally displayed in the video and are also recorded separately to files labeled HELICAM_xxxx.GPX. A 128 GB flash drive (as supplied with helicopter) will record approximately 10 hours of video. When full, the earliest video file is overwritten with the last recording.

96-120 Cockpit Camera (continued)

> NOTE
>
> Flash drives used with the camera must meet the criteria described in the Cockpit Camera User Guide in order to function reliably.

Complete instructions are provided in the Cockpit Camera User Guide on the Robinson website https://robinsonheli.com. The guide also provides additional playback suggestions, instructions for visualizing GPS data, setting user preferences, and updating camera software, and video post-processing and troubleshooting tips. User options include on screen display of time & date and/or GPS position, time zone and daylight saving time status, and units for on screen display of GPS altitude.

Intentionally Blank

CHAPTER 97

AVIONICS

Section	Title	Page
97-10	Garmin G500H Electronic Flight Instrument System (EFIS) Installation	97.1
97-11	LRU Installation – Garmin Display Unit (GDU)	97.1
97-12	LRU Installation – GDC 74H Air Data Computer	97.1
97-13	LRU Installation – GRS 77H AHRS	97.3
97-14	LRU Installation – GMU 44 Magnetometer	97.4
97-15	GPS Installation	97.6
97-20	Radar Altimeter Installation	97.9
97-30	Garmin GTX 33 Transponder Installation	97.12
97-40	Garmin GDL 69A XM Receiver Installation	97.15
97-50	Avionics for R66 S/N 293, 520, 522 & Subsequent	97.17
97-51	Cyclic Grip Assembly	97.17
97-52	Aspen EFD Electronic Flight Instrument System (EFIS) Installations	97.17
97-53	Garmin GTR 225B COM Radio Installation	97.18
97-54	Garmin GDL 88 ADS-B In Receiver Installation	97.20
97-55	Garmin GTX 330 ES Transponder Installation	97.22
97-56	Garmin GTN 600/700-series GPS Installation	97.24
97-57	Electrical System Installation	97.27
97-58	Intercom System Installation	97.27
97-60	Avionics Software	97.29

Intentionally Blank

CHAPTER 97

AVIONICS

97-10 Garmin G500H Electronic Flight Instrument System (EFIS) Installation

The Garmin G500H is an integrated avionics display system that provides flight instrument, moving-map navigation, and additional situational awareness information to the flight crew via the Garmin Display Unit (GDU).

> NOTE
>
> Refer to Garmin G500H Instructions for Continued Airworthiness.

97-11 LRU Installation – Garmin Display Unit (GDU)

Refer to § 95-70 for GDU maintenance procedures.

97-12 LRU Installation – GDC 74H Air Data Computer

A. Description

The GDC 74H Air Data Computer (ADC) compiles information from the pitot-static system and an Outside Air Temperature (OAT) sensor. The GDC 74H computer provides pressure altitude, airspeed, vertical speed, and OAT information to the G500H EFIS system. The GDC 74H computer communicates with the GDU display and GRS 77H AHRS using an ARINC 429 digital interface.

B. Schematic

Refer to Figure 98-10 for GDC 74H Air Data Computer Installation electrical schematic.

C. Removal

1. Turn battery & avionics switches off and pull out EFIS (5 amp) circuit breaker on circuit breaker panel.
2. Hinge left seat forward and remove F748-1 cover assembly.
3. Disconnect airframe harness from GDC 74H air data computer at connectors.
4. Disconnect pitot and static tube fittings from computer and plug fittings.
5. Remove screws securing computer to F950-2 support assembly. Carefully remove computer from under left seat.

97-12 LRU Installation – GDC 74H Air Data Computer (continued)

D. Installation

1. Turn battery & avionics switches off and pull out EFIS (5 amp) circuit breaker on circuit breaker panel.
2. Place GDC 74H air data computer on F950-2 support assembly and install screws. Verify security.
3. Remove plugs from fittings and connect pitot and static tube fittings to computer. Verify security. Perform pitot and static system leak checks per § 95-10.
4. Connect airframe harness to computer at connectors.
5. Push in EFIS circuit breaker (5 amp) on circuit breaker panel. Turn battery & avionics switches on.
6. Perform appropriate functional checks per Garmin G500H Instructions for Continued Airworthiness. Turn battery & avionics switches off.
7. Install F748-1 cover assembly and hinge left seat back.

E. Scheduled Maintenance and Inspections

Refer to Garmin G500H EFIS Maintenance Manual, Section 5 Periodic Maintenance.

NOTE

All factory-installed Garmin units are "on condition" and do not require scheduled periodic maintenance. Units feature a BIT (Built-In Test) function during each initial power-up that will detect internal failure(s) and alert pilot.

NOTE

Refer to § 97-60 for avionics software information.

F. Special Maintenance and Inspections

1. Turn battery & avionics switches off. Open circuit breaker panel, hinge left seat forward, and remove F748-1 cover assembly.
2. Inspect condition of and verify no obvious damage to Garmin GDC 74H Air Data Computer, pitot-static tubes, circuit breaker, and wiring. Verify no loose, chafed, or broken wires or terminals. Verify no evidence of arcing. Verify equipment security.
3. Secure circuit breaker panel. Perform ground checks per Part D steps 5 thru 7.

97-13 LRU Installation – GRS 77H AHRS

A. Description

The Garmin GRS 77H Attitude and Heading Reference System (AHRS) provides aircraft attitude information to the G500H EFIS system. The GRS 77H interfaces with both the GDC 74H Air Data Computer and the GMU 44 magnetometer. The GRS 77H also utilizes GPS data forwarded from the GDU 620. Actual attitude and heading information is sent to the GDU 620 using an ARINC 429 digital interface.

B. Schematic

Refer to Figure 98-11 for GRS 77H AHRS Installation electrical schematic.

C. Removal

1. Turn battery & avionics switches off and pull out EFIS (5 amp) circuit breaker on circuit breaker panel.
2. Hinge left seat forward and remove F950-3 cover assembly.
3. Disconnect airframe harness from GRS 77H AHRS at connectors.
4. Loosen thumbscrews securing AHRS to F950-1 support assembly. Carefully remove AHRS from under left seat.

D. Installation

1. Turn battery & avionics switches off and pull out EFIS (5 amp) circuit breaker on circuit breaker panel.
2. Place GRS 77H AHRS on F950-1 support assembly and tighten thumbscrews. Verify security.
3. Connect airframe harness to GRS 77H AHRS at connectors.
4. Push in EFIS circuit breaker (5 amp) on circuit breaker panel. Turn battery & avionics switches on.
5. Perform appropriate functional checks per Garmin G500H Instructions for Continued Airworthiness. Turn battery & avionics switches off.
6. Install F950-3 cover assembly and hinge left seat back.

97-13 LRU Installation – GRS 77H AHRS (continued)

E. Scheduled Maintenance and Inspections

Refer to Garmin G500H EFIS Maintenance Manual, Section 5 Periodic Maintenance.

NOTE

All factory-installed Garmin units are "on condition" and do not require scheduled periodic maintenance. Units feature a BIT (Built-In Test) function during each initial power-up that will detect internal failure(s) and alert pilot.

NOTE

Refer to § 97-60 for avionics software information.

F. Special Maintenance and Inspections

1. Turn battery & avionics switches off. Open circuit breaker panel, hinge left seat forward, and remove F950-3 cover assembly.
2. Inspect condition of and verify no obvious damage to Garmin GRS 77H AHRS, circuit breaker, and wiring. Verify no loose, chafed, or broken wires or terminals. Verify no evidence of arcing. Verify equipment security.
3. Secure circuit breaker panel. Perform ground checks per Part D steps 4 thru 6.

97-14 LRU Installation – GMU 44 Magnetometer

A. Description

The GMU 44 magnetometer senses the earth's magnetic field. Data is sent to the GRS 77H AHRS for processing to determine aircraft magnetic heading. This unit receives power directly from the GRS 77H and communicates with the GRS 77H using an RS-485 digital interface.

B. Schematic

Refer to Figure 98-11 for GRS 77H AHRS Installation electrical schematic.

C. Removal

1. Turn battery & avionics switches off and pull out EFIS (5 amp) circuit breaker on circuit breaker panel.
2. Remove tailcone cowling per § 53-23.
3. Supporting GMU 44 magnetometer, remove hardware securing magnetometer to F950-4 bracket.
4. Remove MS21919WDG12 clamp and disconnect magnetometer harness from F951-1 harness assembly at connectors. Remove magnetometer.

97-14 LRU Installation – GMU 44 Magnetometer

D. Installation

1. Turn battery & avionics switches off and pull out EFIS (5 amp) circuit breaker on circuit breaker panel.
2. Position MS21919WDG12 clamp on GMU 44 magnetometer connector.
3. Install hardware securing magnetometer to F950-4 bracket. Verify security.
4. Connect F951-1 harness assembly to magnetometer harness at connectors.
5. Push in EFIS circuit breaker (5 amp) on circuit breaker panel. Turn battery & avionics switches on.
6. Perform appropriate functional checks per Garmin G500H Instructions for Continued Airworthiness. Turn battery & avionics switches off.
7. Install tailcone cowling per § 53-23.

E. Scheduled Maintenance and Inspections

Refer to Garmin G500H EFIS Maintenance Manual, Section 5 Periodic Maintenance.

> NOTE
>
> All factory-installed Garmin units are "on condition" and do not require scheduled periodic maintenance. Units feature a BIT (Built-In Test) function during each initial power-up that will detect internal failure(s) and alert pilot.

> NOTE
>
> Refer to § 97-60 for avionics software information.

F. Special Maintenance and Inspections

1. Turn battery & avionics switches off. Open circuit breaker panel and remove tailcone cowling per § 53-23.
2. Inspect condition of and verify no obvious damage to Garmin GMU 44 magnetometer, circuit breaker, and wiring. Verify no loose, chafed, or broken wires or terminals. Verify no evidence of arcing. Verify equipment security.
3. Secure circuit breaker panel. Perform ground checks per Part D steps 5 thru 7.

97-15 GPS Installation

> NOTE
>
> Refer to Garmin GTN 600/700 series Maintenance Manual and Instructions for Continued Airworthiness.

A. Description

The G500H system requires connection to at least one WAAS-enabled GPS receiver. Garmin's Wide Area Augmentation System (WAAS) utilizes ground reference stations that monitor GPS satellite data and issue correction messages which are broadcast via satellite to WAAS-enabled GPS receivers, improving accuracy, integrity, and availability.

One GTN 700-series, or one or two GTN 600-series, GPS(s) may be installed in the G060 upper console.

Also refer to § 97-56 for Garmin GTN 600/700-series GPS Installation.

B. Schematic

Refer to Figure 98-12 for GTN 600/700-series GPS Installation electrical schematic.

C. Removal

1. Turn battery & avionics switches off and pull out GPS 1 (5 amp) and GPS 2 (5 amp) circuit breakers as required on circuit breaker panel.
2. Loosen radio key securing GTN 600/700-series GPS(s) to tray in upper console.
3. Carefully unplug/remove GPS(s) from tray.

D. Installation

1. Turn battery & avionics switches off and pull out GPS 1 (5 amp) and GPS 2 (5 amp) circuit breakers as required on circuit breaker panel.
2. Carefully plug-in/install GTN 600/700-series GPS(s) in appropriate location in tray in upper console.
3. Tighten radio key securing GPS(s) to tray. Verify equipment security.
4. Push in GPS 1 (5 amp) and GPS 2 (5 amp) circuit breakers as required on circuit breaker panel. Turn battery & avionics switches on.
5. Perform appropriate functional checks per Garmin GTN 600/700 series Pilot's Guide. Turn battery & avionics switches off.

97-15 GPS Installation (continued)

E. Antenna

Refer to § 6-80 for antenna locations and R66 Illustrated Parts Catalog (IPC) Chapter 6.

> NOTE
>
> Antenna installation depends on number of COM installations and additional equipment installed.

Removal

1. Turn battery & avionics switches off and pull out GPS 1 (5 amp) and GPS 2 (5 amp) circuit breakers as required on circuit breaker panel.
2. Using plastic scraper, remove B270-1 sealant from around GPS antenna at corners where it attaches to tailcone.
3. Disconnect antenna cable from antenna. As required, remove B270-13 sealant from fastener holes. Remove hardware securing antenna (and B322-10 spacers for NAV) to tailcone (or chin for glideslope) and remove antenna.

Installation

1. Turn battery & avionics switches off and pull out GPS 1 (5 amp) and GPS 2 (5 amp) circuit breakers as required on circuit breaker panel.
2. a. For GPS antenna:
    - i. Remove paint & primer from antenna mating surfaces to ensure electrical ground.
    - ii. As required, apply light coat B270-13 sealant to screw threads and install screws securing antenna to tailcone. As required, seal around screw heads and fill fastener holes using B270-13 sealant and allow to dry. Verify security.
    - iii. Apply small bead B270-1 sealant (0.1 inch max in height) around antenna at corners where it attaches to tailcone and allow to dry.

   b. For NAV antenna:
    - i. Install hardware and B322-10 spacers (thick edge inward) securing antenna to tailcone. Verify security.

   c. For glideslope antenna:
    - i. Install screws securing antenna to chin. Verify security.
3. Connect antenna cable to antenna. Verify security.
4. Perform ground checks per Part D steps 4 and 5.

97-15 GPS Installation (continued)

F. Scheduled Maintenance and Inspections

NOTE

All factory-installed Garmin units are "on condition" and do not require scheduled periodic maintenance. Units feature a BIT (Built-In Test) function during each initial power-up that will detect internal failure(s) and alert pilot.

NOTE

Refer to § 97-60 for avionics software information.

G. Special Maintenance and Inspections

1. Turn battery & avionics switches off. Open circuit breaker panel and upper console.
2. Inspect condition of and verify no obvious damage to GPS(s), copper bus bars, circuit breaker, and wiring. Verify no loose, chafed, or broken wires or terminals. Verify no evidence of arcing. Verify equipment security.
3. Secure circuit breaker panel and upper console. Perform ground checks per Part D steps 4 and 5.

97-20 Radar Altimeter Installation

A. Description

The FreeFlight RA-4500 radar altimeter has ARINC 429 output for communication with electronic displays such as the G500H EFIS system. Radar altitude data can be displayed on the PFD portion of the Garmin GDU 620 display.

B. Schematic

Refer to Figure 98-13 for Radar Altimeter Installation electrical schematic.

C. Removal

RAD-40 Indicator

1. Turn battery & avionics switches off and pull out RADAR ALT (2 amp) circuit breaker on circuit breaker panel.
2. Remove perimeter screws securing instrument face to upper console and carefully pull face aft, or remove Garmin GDU 620 Display per § 95-70.
3. a. For Above-Console Installation: Remove hardware securing B560 enclosure assembly to instrument console and remove hardware securing B560 faceplate to RAD-40 Indicator.

   b. For In-Console Installation: Supporting RAD-40 indicator, remove hardware securing B421-1 visor assembly, A590-4 cover plate, and indicator to instrument face.
4. Disconnect console harness from indicator and carefully remove indicator.

ATG-410 Tone Generator

1. Turn battery & avionics switches off and pull out RADAR ALT (2 amp) circuit breaker on circuit breaker panel. Open instrument console or remove Garmin GDU 620 Display per § 95-70.
2. Supporting ATG-410 tone generator, remove screws securing tone generator to keel panel. Carefully remove tone generator and disconnect console harness.

RA-4000/RA-4500 Radar Altimeter

1. Turn battery & avionics switches off and pull out RADAR ALT (2 amp) circuit breaker on circuit breaker panel. Hinge front left seat forward.
2. Disconnect airframe and antenna harnesses from RA-4000/RA-4500 radar altimeter.
3. Supporting radar altimeter, remove screws securing radar altimeter to F542-2 support. Carefully remove radar altimeter from under left seat.

97-20 Radar Altimeter Installation (continued)

D. Installation

RAD-40 Indicator

1. Turn battery & avionics switches off and pull out RADAR ALT (2 amp) circuit breaker on circuit breaker panel.
2. Connect console harness to RAD-40 Indicator.
3. a. For Above-Console Installation: Install hardware securing B560 faceplate to indicator & install hardware securing B560 enclosure assembly to instrument console.
   b. For In-Console Installation: Supporting indicator, install hardware securing B421-1 visor assembly, A590-4 cover plate, and indicator to instrument face.
4. Install perimeter screws securing instrument face to upper console or install Garmin GDU 620 Display per § 95-70.
5. Push in RADAR ALT (2 amp) circuit breaker on circuit breaker panel. Turn battery & avionics switches on.
6. Perform appropriate functional checks per Freeflight Systems Instructions for Continued Airworthiness. Turn battery & avionics switches off.

ATG-410 Tone Generator

1. Turn battery & avionics switches off and pull out RADAR ALT (2 amp) circuit breaker on circuit breaker panel.
2. Connect console harness to ATG-410 tone generator.
3. Position tone generator on keel panel and install screws. Verify security.
4. Close instrument console or install Garmin GDU 620 Display per § 95-70.
5. Push in RADAR ALT (2 amp) circuit breaker on circuit breaker panel. Turn battery & avionics switches on.
6. Perform appropriate functional checks per Freeflight Systems Instructions for Continued Airworthiness. Turn battery & avionics switches off.

RA-4000/RA-4500 Radar Altimeter

1. Turn battery & avionics switches off and pull out RADAR ALT (2 amp) circuit breaker on circuit breaker panel.
2. Connect airframe and antenna harnesses to radar altimeter.
3. Supporting RA-4000/RA-4500 radar altimeter, install screws securing radar altimeter to F542-2 support. Verify security. Hinge front left seat aft.
4. Push in RADAR ALT (2 amp) circuit breaker on circuit breaker panel. Turn battery & avionics switches on.
5. Perform appropriate functional checks per Freeflight Systems Instructions for Continued Airworthiness. Turn battery & avionics switches off.

97-20 Radar Altimeter Installation (continued)

E. Antenna

Refer to § 6-80 for antenna locations & R66 Illustrated Parts Catalog (IPC) Chapter 6.

Removal

1. Turn battery & avionics switches off and pull out RADAR ALT (2 amp) circuit breaker on circuit breaker panel.
2. Remove hardware securing F469 scuff plate and carpet assembly to floor, remove plate, and peel back carpet as required. Remove hole plug.
3. Disconnect antenna cable from antenna.
4. Remove screws securing antenna to chin. Repeat steps for opposite-side antenna.

Installation

1. Turn battery & avionics switches off and pull out RADAR ALT (2 amp) circuit breaker on circuit breaker panel.
2. Connect antenna cable to antenna and install screws securing antenna to chin. Verify security.
3. Install floor hole plug. Install hardware securing F469 scuff plate and carpet assembly to floor. Repeat steps for opposite-side antenna.
4. Push in RADAR ALT (2 amp) circuit breaker on circuit breaker panel. Turn battery & avionics switches on.
5. Perform appropriate functional checks per Freeflight Systems Instructions for Continued Airworthiness. Turn battery & avionics switches off.

F. Scheduled Maintenance and Inspections

Refer to Freeflight Systems Instructions for Continued Airworthiness.

G. Special Maintenance and Inspections

1. Turn battery & avionics switches off. Open circuit breaker panel. Open instrument console, remove perimeter screws securing instrument face to upper console, or remove Garmin GDU 620 Display per § 95-70. Hinge front left seat forward as required.
2. Inspect condition of and verify no obvious damage to RAD-40 Indicator, ATG-410 Tone Generator, RA-4000/RA-4500 Radar Altimeter, copper bus bars, circuit breaker, and wiring. Verify no loose, chafed, or broken wires or terminals. Verify no evidence of arcing. Verify equipment security.
3. Secure circuit breaker panel and close instrument console, install perimeter screws securing instrument face to upper console, or install Garmin GDU 620 Display per § 95-70. Hinge front left seat aft as required.

97-30 Garmin GTX 33 Transponder Installation

> NOTE
>
> Refer to Garmin GTX 33 Transponder Maintenance Manual and Instructions for Continued Airworthiness.

A. Description

The Garmin GTX 33 is a remote-mounted transponder with extended-squitter ADS-B broadcast capability. The GTX 33 has no control panel face; it is controlled via the Garmin GTN 600/700-series GPS navigator.

Refer to § 97-55 Garmin GTX 330 ES Transponder Installation.

B. Schematic

Refer to Figure 98-14 for Garmin GTX 33 Transponder Installation electrical schematic.

C. Removal

1. Turn battery & avionics switches off and pull out XPDR (5 amp) circuit breaker on circuit breaker panel.
2. Remove hardware securing F640 face assembly to avionics panel and remove face.
3. Loosen screw and swing handle across GTX 33 transponder to unlock. Carefully unplug/remove transponder from tray.

D. Installation

1. Turn battery & avionics switches off and pull out XPDR (5 amp) circuit breaker on circuit breaker panel.
2. Carefully plug-in/install GTX 33 transponder in appropriate location in avionics tray.
3. Swing handle across transponder to lock and tighten screw. Verify equipment security.
4. Install hardware securing F640 face assembly to avionics panel.
5. Push in XPDR (5 amp) circuit breaker on circuit breaker panel. Turn battery & avionics switches on.
6. Perform appropriate functional checks per Garmin GTX 33 Transponder Maintenance Manual and Instructions for Continued Airworthiness. Turn battery & avionics switches off.

97-30 Garmin GTX 33 Transponder Installation (continued)

E. Antenna

Refer to § 6-80 for antenna locations & R66 Illustrated Parts Catalog (IPC) Chapter 6.

> NOTE
>
> Antenna installation depends on optional equipment installed.

Removal

1. Turn battery & avionics switches off and pull out XPDR (5 amp) circuit breaker on circuit breaker panel.
2. Using plastic scraper, remove B270-1 sealant from around transponder antenna at corners where it attaches to B322 plate/doubler.
3. Remove screws securing plate/doubler to cabin skin and disconnect antenna cable from antenna. Remove hardware securing plate/doubler to antenna and remove antenna.

Installation

1. Turn battery & avionics switches off and pull out XPDR (5 amp) circuit breaker on circuit breaker panel.
2. Remove paint & primer from between cabin skin and B322 plate/doubler to ensure electrical ground.
3. Install hardware securing transponder antenna to plate/doubler. Verify security. Apply small bead B270-1 sealant (0.1 inch max in height) around antenna at corners where it attaches to plate/doubler and allow to dry.
4. Connect antenna cable to antenna and install screws securing mounting plate to cabin skin. Verify security.
5. Perform ground checks per Part D steps 4 and 5.

F. Scheduled Maintenance and Inspections

> NOTE
>
> All factory-installed Garmin units are “on condition” and do not require scheduled periodic maintenance. Units feature a BIT (Built-In Test) function during each initial power-up that will detect internal failure(s) and alert pilot.

> NOTE
>
> Refer to § 97-60 for avionics software information.

97-30 Garmin GTX 33 Transponder Installation (continued)

G. Special Maintenance and Inspections

1. Turn battery & avionics switches off. Open circuit breaker panel.
2. Remove GTX 33 transponder per Part C. Inspect condition of and verify no obvious damage to transponder, radio tray, copper bus bars, circuit breaker, and wiring. Verify no loose, chafed, or broken wires or terminals. Verify no evidence of arcing.
3. Secure circuit breaker panel. Install transponder per Part D.

97-40 Garmin GDL 69A XM Receiver Installation

> NOTE
>
> Refer to Garmin GDL 69A XM Receiver Instructions for Continued Airworthiness.

A. Description

The GDL 69A XM Satellite Radio receives broadcast weather data and audio entertainment. The GDL 69A has no control panel face; weather data and audio controls are displayed on the G500H EFIS MFD or by a GTN 600/700-series GPS navigator. The GDL 69A interfaces with the audio panel to distribute the audio signal.

A subscription to XM Satellite Radio service enables GDL 69A capability.

B. Schematic

Refer to Figure 98-15 for Garmin GDL 69A XM Receiver Installation electrical schematic.

C. Removal

1. Turn battery & avionics switches off and pull out XM (2 amp) circuit breaker on circuit breaker panel.
2. Remove hardware securing F640 face assembly to avionics panel and remove face.
3. Loosen screw and swing handle across GDL 69A receiver to unlock. Carefully unplug/remove receiver from tray.

D. Installation

1. Turn battery & avionics switches off and pull out XM (5 amp) circuit breaker on circuit breaker panel.
2. Carefully plug-in/install GDL 69A receiver in appropriate location in avionics tray.
3. Swing handle across receiver to lock and tighten screw. Verify equipment security.
4. Install hardware securing F640 face assembly to avionics panel.
5. Push in XM (2 amp) circuit breaker on circuit breaker panel. Turn battery & avionics switches on.
6. Perform appropriate functional checks per Garmin GDL 69A XM Receiver Instructions for Continued Airworthiness. Turn battery & avionics switches off.

97-40 Garmin GDL 69A XM Receiver Installation (continued)

E. Antenna

Refer to § 6-80 for antenna locations & R66 Illustrated Parts Catalog (IPC) Chapter 6.

NOTE

Antenna installation depends on optional equipment installed.

Removal

1. Turn battery & avionics switches off and pull out XM (2 amp) circuit breaker on circuit breaker panel.
2. Using plastic scraper, remove B270-1 sealant from around XM antenna at corners where it attaches to F706-1 cowling.
3. Remove screws securing antenna to cowling and disconnect antenna cable from antenna. Remove antenna and rubber gasket.

Installation

1. Turn battery switches off and pull out XM (2 amp) circuit breaker on circuit breaker panel.
2. Install hardware securing XM antenna (with rubber gasket) to F706-1 cowling. Verify security. Apply small bead B270-1 sealant (0.1 inch max in height) around antenna at corners where it attaches to cowling and allow to dry.
3. Connect antenna cable to antenna. Verify security.
4. Perform ground checks per Part D steps 4 and 5.

F. Scheduled Maintenance and Inspections

NOTE

All factory-installed Garmin units are “on condition” and do not require scheduled periodic maintenance. Units feature a BIT (Built-In Test) function during each initial power-up that will detect internal failure(s) and alert pilot.

NOTE

Refer to § 97-60 for avionics software information.

G. Special Maintenance and Inspections

1. Turn battery & avionics switches off. Open circuit breaker panel.
2. Remove GDL 69A XM receiver per Part C. Inspect condition of and verify no obvious damage to XM receiver, circuit breaker, and wiring. Verify no loose, chafed, or broken wires or terminals. Verify no evidence of arcing.
3. Secure circuit breaker panel. Install XM receiver per Part D.

97-50 Avionics for R66 S/N 293, 520, 522, & Subsequent

97-51 Cyclic Grip Assembly

A. Description of New Features

The angle of the pilot's cyclic grip can be adjusted fore and aft relative to the cross tube. The most forward position provides the most control clearance at aft cyclic.

B. Grip Angle Adjustment

1. Loosen cap screws securing pilot's cyclic grip, block assembly, and bar to grip weldment.
2. Rotate grip about weldment to desired angle. Special torque cap screws to 40 in.-lb.

C. Removal and Installation

Refer to § 67-12 for cyclic grip assembly removal and installation procedures.

D. Schematic

Refer to Figure 98-1 for F024 electrical system schematic.

97-52 Aspen EFD Electronic Flight Instrument System (EFIS) Installations

Refer to § 95-73 for Aspen EFD EFIS Installations.

A. Schematic

Refer to Figure 98-16 for Aspen EFD500H Display Installation electrical schematic.

Refer to Figure 98-17 for Aspen EFD1000H Display Installation electrical schematic.

97-53 Garmin GTR 225B COM Radio Installation

> NOTE
>
> Refer to Garmin GTR 225B Maintenance Manual and Instructions for Continued Airworthiness.

A. Description of New Features

The new C802-2 COM radio (Garmin GTR 225B) includes similar communication features available in the earlier R66 COM radio (KY196A [28V]), but also includes an airport frequency database, ability to monitor the standby frequency, and improved user memory channel functionality. The new COM radio is a dual voltage unit, suitable for use in 14V and 28V systems.

B. Schematic

Refer to Figure 98-9 for C802-2 COM Radio Installation electrical schematic.

C. Removal

1. Turn battery switch off and pull out COM radio (5 amp) circuit breaker on circuit breaker panel.
2. Loosen radio key securing C802-2 COM radio to avionics tray.
3. Carefully unplug/remove radio from tray.

D. Installation

1. Turn battery switch off and pull out COM radio (5 amp) circuit breaker on circuit breaker panel.
2. Carefully plug-in/install C802-2 COM radio in appropriate location in avionics tray.
3. Tighten radio key securing radio to tray. Verify equipment security.
4. Push in COM radio (5 amp) circuit breaker on circuit breaker panel. Turn battery & avionics switches on.
5. Perform appropriate functional checks per Garmin GTR 225B Pilot's Guide. Turn battery & avionics switches off.

E. Antenna

Refer to § 6-80 for antenna locations and R66 Illustrated Parts Catalog (IPC) Chapter 6.

> NOTE
>
> Antenna installation depends on number of COM installations and additional equipment installed.

97-53 Garmin GTR 225B COM Radio Installation (continued)

E. Antenna (continued)

Removal

1. Turn battery switch off and pull out COM radio (5 amp) circuit breaker on circuit breaker panel.
2. Using plastic scraper, remove B270-1 sealant from around COM antenna at corners where it attaches to tailcone.
3. Disconnect antenna cable from antenna. As required, remove B270-13 sealant from fastener holes. Remove screws securing antenna to tailcone & remove antenna.

Installation

1. Turn battery switch off and pull out COM radio (5 amp) circuit breaker on circuit breaker panel.
2. Remove paint & primer from antenna mating surfaces to ensure electrical ground.
3. As required, apply light coat B270-13 sealant to screw threads and install screws securing antenna to tailcone. As required, seal around screw heads and fill fastener holes using B270-13 sealant and allow to dry. Verify security.
4. Apply small bead B270-1 sealant (0.1 inch max in height) around antenna at corners where it attaches to tailcone and allow to dry.
5. Connect antenna cable to antenna. Verify security.
6. Perform ground checks per Part D steps 4 and 5.

F. Scheduled Maintenance and Inspections

NOTE

All factory-installed Garmin units are "on condition" and do not require scheduled periodic maintenance. Units feature a BIT (Built-In Test) function during each initial power-up that will detect internal failure(s) and alert pilot.

NOTE

Refer to § 97-60 for avionics software information.

G. Special Maintenance and Inspections

1. Turn battery & avionics switches off. Open circuit breaker panel and upper console.
2. Inspect condition of and verify no obvious damage to COM radio, radio tray, copper bus bars, circuit breaker, and wiring. Verify no loose, chafed, or broken wires or terminals. Verify no evidence of arcing. Verify equipment security.
3. Secure circuit breaker panel and upper console. Perform ground checks per Part D steps 4 and 5.

97-54 Garmin GDL 88 ADS-B In Receiver Installation

> NOTE
>
> Refer to Garmin GDL 88 Maintenance Manual and Instructions for Continued Airworthiness.

A. Description of New Features

Automatic Dependent Surveillance-Broadcast (ADS-B) "Out" equipment transmits aircraft specific-data and position information to air traffic control via GPS-based surveillance (rather than radar-based surveillance). ADS-B "In" equipment receives data from other aircraft or from air traffic control. The R66 may be equipped with ADS-B Out or with ADS-B Out and ADS-B In systems. Refer to § 97-15.

The ADS-B In system receives data via the C803-2 ADS-B (Garmin GDL 88) universal access transceiver (used as a receiver) on frequencies 978 MHz and 1090 MHz. Received data is displayed on the primary GPS screen. Refer to § 97-16.

B. Schematic

Refer to Figure 98-10 for C803-2 ADS-B Installation electrical schematic.

C. Removal

1. Turn battery switch off and pull out XPDR (5 amp) circuit breaker on circuit breaker panel.
2. Under left front seat, disconnect airframe harness from GDL 88 receiver at connectors.
3. Remove screws securing GDL 88 receiver to C904-1 mount assembly, and remove GDL 88 receiver.

D. Installation

1. Turn battery switch off and pull out XPDR (5 amp) circuit breaker on circuit breaker panel.
2. Under left front seat, position GDL 88 receiver on C904-1 mount assembly and install screws. Verify security.
3. Connect airframe harness to GDL 88 receiver at connectors.
4. Push in XPDR (5 amp) circuit breaker on circuit breaker panel. Turn battery & avionics switches on.
5. Perform appropriate functional checks per Garmin GDL 88 Pilot's Guide. Turn battery & avionics switches off.

97-54 Garmin GDL 88 ADS-B In Receiver Installation (continued)

E. Antenna

Refer to § 6-80 for antenna locations and R66 Illustrated Parts Catalog (IPC) Chapter 6.

> NOTE
> Antenna installation depends on number of COM installations and additional equipment installed.

Removal

1. Turn battery switch off and pull out XPDR (5 amp) circuit breaker on circuit breaker panel.
2. Using plastic scraper, remove B270-1 sealant from around GDL 88 antenna at corners where it attaches to belly.
3. Disconnect antenna cable from antenna. Remove hardware securing antenna to belly and remove antenna.

Installation

1. Turn battery switch off and pull out XPDR (5 amp) circuit breaker on circuit breaker panel.
2. Remove paint & primer from antenna mating surfaces to ensure electrical ground.
3. Install hardware securing antenna to belly. Apply small bead B270-1 sealant around antenna at corners where it attaches to belly and allow to dry.
4. Connect antenna cable to antenna. Verify security.
5. Perform ground checks per Part D steps 4 and 5.

F. Scheduled Maintenance and Inspections

> NOTE
> All factory-installed Garmin units are "on condition" and do not require scheduled periodic maintenance. Units feature a BIT (Built-In Test) function during each initial power-up that will detect internal failure(s) and alert pilot.

> NOTE
> Refer to § 97-60 for avionics software information.

G. Special Maintenance and Inspections

1. Turn battery & avionics switches off. Open circuit breaker panel and access left front seat.
2. Inspect condition of and verify no obvious damage to GDL 88, circuit breaker, and wiring. Verify no loose, chafed, or broken wires or terminals. Verify no evidence of arcing. Verify equipment security.
3. Secure circuit breaker panel and left front seat. Perform ground checks per Part D steps 4 and 5.

97-55 Garmin GTX 330 ES Transponder Installation

> NOTE
>
> Refer to Garmin GTX 330 ES Maintenance Manual and Instructions for Continued Airworthiness.

A. Description of New Features

Automatic Dependent Surveillance-Broadcast (ADS-B) "Out" equipment transmits aircraft specific-data and position information to air traffic control via GPS-based surveillance (rather than radar-based surveillance). ADS-B Out equipment will be required for R66 operation in certain airspace in the United States after January 1, 2020. ADS-B "In" equipment receives data from other aircraft or from air traffic control. ADS-B In equipment is not required for R66 operation in the United States. The R66 may be equipped with ADS-B Out or with ADS-B Out and ADS-B In systems.

Both ADS-B systems operate mostly automatically. ADS-B equipment is programmed with aircraft specific-data at installation. ADS-B systems use the primary installed GPS for position information. Additional flight-specific data is entered by the pilot using transponder controls. ADS-B data is transmitted via the transponder's Extended Squitter (ES) on frequency 1090 MHz.

The ADS-B In system receives data via a receiver on frequencies 978 MHz and 1090 MHz. Received data is displayed on the primary GPS screen.

ADS-B Out equipment (transponder and primary GPS) or ADS-B Out and ADS-B In equipment (transponder, primary GPS, and receiver) must have power and must be in normal operating modes for systems to function properly. ADS-B Out system faults are annunciated on the transponder and primary GPS screens. ADS-B In system faults are annunciated on the primary GPS screen.

Change of aircraft registration may require ADS-B equipment programming by qualified maintenance personnel.

Refer to R66 Pilot's Operating Handbook Section 9 for additional information.

B. Schematic

Refer to Figure 98-11 for C804-15 transponder & blind encoder electrical schematic.

C. Removal

1. Turn battery switch off and pull out XPDR (5 amp) circuit breaker on circuit breaker panel.
2. Loosen radio key securing C804-15 transponder to avionics tray.
3. Carefully unplug/remove transponder from tray.

97-55 Garmin GTX 330 ES Transponder Installation (continued)

D. Installation

1. Turn battery switch off and pull out XPDR (5 amp) circuit breaker on circuit breaker panel.
2. Carefully plug-in/install C804-15 transponder in appropriate location in avionics tray.
3. Tighten radio key securing transponder to tray. Verify equipment security.
4. Push in XPDR (5 amp) circuit breaker on circuit breaker panel. Turn battery & avionics switches on.
5. Perform appropriate functional checks per Garmin GTX 330 ES Pilot's Guide. Turn battery & avionics switches off.

E. Antenna

Refer to § 6-80 for antenna locations and R66 Illustrated Parts Catalog (IPC) Chapter 6.

NOTE
Antenna installation depends on optional equipment installed.

Removal

1. Turn battery switch off and pull out XPDR (5 amp) circuit breaker on circuit breaker panel.
2. Using plastic scraper, remove B270-1 sealant from around transponder antenna at corners where it attaches to B322-11 mounting plate.
3. Remove screws securing mounting plate to cabin skin and disconnect antenna cable from antenna. Remove hardware securing mounting plate to antenna and remove antenna.

Installation

1. Turn battery switch off and pull out XPDR (5 amp) circuit breaker on circuit breaker panel.
2. Remove paint & primer from between cabin skin and B322-11 plate to ensure electrical ground.
3. Install hardware securing transponder antenna to mounting plate. Verify security. Apply small bead B270-1 sealant (0.1 inch max in height) around antenna at corners where it attaches to mounting plate and allow to dry.
4. Connect antenna cable to antenna and install screws securing mounting plate to cabin skin. Verify security.
5. Perform ground checks per Part D steps 4 and 5.

97-55 Garmin GTX 330 ES Transponder Installation (continued)

F. Scheduled Maintenance and Inspections

> NOTE
>
> All factory-installed Garmin units are "on condition" and do not require scheduled periodic maintenance. Units feature a BIT (Built-In Test) function during each initial power-up that will detect internal failure(s) and alert pilot.

> NOTE
>
> Refer to § 97-60 for avionics software information.

G. Special Maintenance and Inspections

1. Turn battery & avionics switches off. Open circuit breaker panel and upper console.
2. Inspect condition of and verify no obvious damage to transponder, radio tray, copper bus bars, circuit breaker, and wiring. Verify no loose, chafed, or broken wires or terminals. Verify no evidence of arcing. Verify equipment security.
3. Secure circuit breaker panel and upper console. Perform ground checks per Part D steps 4 and 5.

97-56 Garmin GTN 600/700-series GPS Installation

> NOTE
>
> Refer to Garmin GTN 600/700 series Maintenance Manual and Instructions for Continued Airworthiness.

A. Description of New Features

The new C831 GPS (Garmin GTN 600/700 series) includes similar navigation features available in the earlier R66 GPS (Garmin GNS 400/500 series), but the interface offers a combination of touch screen technology with traditional buttons and knobs.

One GTN 700 series, or one or two GTN 600 series, GPS(s) may be installed in the pilot-side console location only.

Note: R66 ADS-B Out system requires Garmin GTN 600/700 series GPS. Refer to § 97-15.

B. Schematic

Refer to Figure 98-12 for C831 GPS installation electrical schematic.

97-56 Garmin GTN 600/700-series GPS Installation (continued)

C. Removal

1. Turn battery switch off and pull out GPS 1 (5 amp) and GPS 2 (5 amp) circuit breakers as required on circuit breaker panel.
2. Loosen radio key securing C831 GPS(s) to tray in pilot's side console.
3. Carefully unplug/remove GPS(s) from tray.

D. Installation

1. Turn battery switch off and pull out GPS 1 (5 amp) and GPS 2 (5 amp) circuit breakers as required on circuit breaker panel.
2. Carefully plug-in/install C831 GPS(s) in appropriate location in tray in pilot's side console.
3. Tighten radio key securing GPS(s) to tray. Verify equipment security.
4. Push in GPS 1 (5 amp) and GPS 2 (5 amp) circuit breakers as required on circuit breaker panel. Turn battery & avionics switches on.
5. Perform appropriate functional checks per Garmin GTN 600/700 series Pilot's Guide. Turn battery & avionics switches off.

E. Antenna

Refer to § 6-80 for antenna locations and R66 Illustrated Parts Catalog (IPC) Chapter 6.

> NOTE
>
> Antenna installation depends on number COM installations and additional equipment installed.

Removal

1. Turn battery switch off and pull out GPS 1 (5 amp) and GPS 2 (5 amp) circuit breakers as required on circuit breaker panel.
2. Using plastic scraper, remove B270-1 sealant from around GPS antenna at corners where it attaches to tailcone.
3. Disconnect antenna cable from antenna. As required, remove B270-13 sealant from fastener holes. Remove screws securing antenna to tailcone and remove antenna.

97-56 Garmin GTN 600/700-series GPS Installation (continued)

E. Antenna (continued)

Installation

1. Turn battery switch off and pull out GPS 1 (5 amp) and GPS 2 (5 amp) circuit breakers as required on circuit breaker panel.
2. Remove paint & primer from antenna mating surfaces to ensure electrical ground.
3. As required, apply light coat B270-13 sealant to screw threads and install screws securing antenna to tailcone. As required, seal around screw heads and fill fastener holes using B270-13 sealant and allow to dry. Verify security.
4. Apply small bead B270-1 sealant (0.1 inch max in height) around antenna at corners where it attaches to tailcone and allow to dry.
5. Connect antenna cable to antenna. Verify security.
6. Perform ground checks per Part D steps 4 and 5.

F. Scheduled Maintenance and Inspections

NOTE

All factory-installed Garmin units are "on condition" and do not require scheduled periodic maintenance. Units feature a BIT (Built-In Test) function during each initial power-up that will detect internal failure(s) and alert pilot.

NOTE

Refer to § 97-60 for avionics software information.

G. Special Maintenance and Inspections

1. Turn battery & avionics switches off. Open circuit breaker panel. Remove hardware securing pilot's side console shell assembly to tray and carefully pivot shell assembly upward (GPS[s] and faceplate may be also be removed).
2. Inspect condition of and verify no obvious damage to GPS(s), tray, copper bus bars, circuit breaker, and wiring. Verify no loose, chafed, or broken wires or terminals. Verify no evidence of arcing. Verify equipment security.
3. Secure circuit breaker panel and pilot's side console. Perform ground checks per Part D steps 4 and 5.

97-57 Electrical System Installation

A. Description of New Features

1. Main Switch Panel

   The main switch panel is located at the top of the avionics stack. Rocker-style switches are utilized for ergonomic comfort for this new location, and for the new console geometry (earlier R66s utilized paddle-style switches). Some secondary instruments such as OAT and clock and hourmeter are also relocated.

B. Schematic

Refer to Figure 98-13 for F024 electrical system schematic.

97-58 Intercom System Installation

> NOTE
>
> Refer to Garmin GMA 350H series Maintenance Manual and Instructions for Continued Airworthiness.

A. Description of New Features

The new Garmin GMA 350H audio control includes improved squelch and background noise suppression, 3D audio (if stereo headsets are used) which allows inputs from separate radios to sound as if they are coming from separate locations around the listener, and some control functions via voice command when a momentary pushbutton switch is depressed on the pilot's cyclic grip.

B. Schematic

Refer to Figure 98-14 for F060 Intercom System Installation (Garmin GMA 350H Audio Control) electrical schematic.

C. Removal

1. Turn battery switch off & pull out ICS (5 amp) circuit breaker on circuit breaker panel.
2. Loosen radio key securing Garmin GMA 350H audio control to avionics tray.
3. Carefully unplug/remove audio control from tray.

D. Installation

1. Turn battery switch off & pull out ICS (5 amp) circuit breaker on circuit breaker panel.
2. Carefully plug-in/install Garmin GMA 350H audio control in appropriate location in avionics tray.
3. Tighten radio key securing audio control to tray. Verify equipment security.
4. Push in ICS (5 amp) circuit breakers on circuit breaker panel. Turn battery & avionics switches on.
5. Perform appropriate functional checks per Garmin GMA 350H series Pilot's Guide. Turn battery & avionics switches off.

97-58 Intercom System Installation (continued)

E. Antenna

Refer to § 6-80 for marker beacon antenna location and R66 Illustrated Parts Catalog (IPC) Figure 6-13.

Removal

1. Turn battery switch off and pull out ICS (5 amp) circuit breaker on circuit breaker panel.
2. Using plastic scraper, remove B270-1 sealant from around CI 102 marker beacon antenna at corners where it attaches to belly panel.
3. Remove hardware securing F794 forward belly panel to belly and disconnect F850-210 antenna cable from antenna. Remove screws securing antenna to panel and remove antenna.

Installation

1. Turn battery switch off and pull out ICS (5 amp) circuit breaker on circuit breaker panel.
2. Remove paint and primer from antenna mating surfaces to ensure electrical ground.
3. Apply light coat B270-11 adhesive to screw threads and install screws securing CI 102 marker beacon antenna to F794 forward belly panel. Verify security.
4. Connect F850-210 antenna cable to antenna. Install screws securing forward belly panel to belly. Verify security.
5. Apply small bead B270-1 sealant (0.1 inch max in height) around antenna at corners where it attaches to belly panel and allow to dry.
6. Perform ground checks per Part D steps 4 and 5.

F. Scheduled Maintenance and Inspections

NOTE

All factory-installed Garmin units are "on condition" and do not require scheduled periodic maintenance. Units feature a BIT (Built-In Test) function during each initial power-up that will detect internal failure(s) and alert pilot.

NOTE

Refer to § 97-60 for avionics software information.

97-58 Intercom System Installation (continued)

G. Special Maintenance and Inspections

1. Turn battery & avionics switches off. Open circuit breaker panel and upper console.
2. Inspect condition of and verify no obvious damage to audio control, radio tray, copper bus bars, circuit breaker, and wiring. Verify no loose, chafed, or broken wires or terminals. Verify no evidence of arcing. Verify equipment security.
3. Secure circuit breaker panel and upper console. Perform ground checks per Part D steps 4 and 5.

97-60 Avionics Software

Modern avionics software is complex and subject to rigorous testing by RHC to assure proper function and integration in the aircraft. Only specified software versions and software configurations have been FAA-approved for installation in Robinson helicopters. Software updates should not be attempted without a thorough understanding of approval status and compatibility. Technical support from either RHC or the avionics manufacturer will likely be required. In some cases, updating software for one item of avionics may require additional avionics to be updated to assure compatibility.

As long as RHC-installed equipment is functioning properly, there is no continuing airworthiness requirement to check or update software levels in Robinson helicopters; RHC will issue an SB (or FAA will issue an AD) for any mandatory updates.

Consult www.robinsonheli.com > Customer Support > Avionics Support > Avionics Software page for approved software configurations.

> NOTE
>
> The above statements apply to avionics operating software. Databases (e.g. charts, terrain, etc.) may be updated regularly using avionics manufacturer's recommended procedures.

Intentionally Blank

CHAPTER 98

WIRING DIAGRAMS

Figure	*Title*	*Page*
98-1	R66 Electrical System (F024-2 Revision V)	98.1
98-2A	R66 Electrical System (F024-2 Revision R)	98.2A
98-2B	R66 Electrical System (F024-1 Revision J)	98.2B
98-3	Air Conditioning Installation	98.3
98-4	ADF Installation	98.5
98-5	Standard Audio Installation (NAT AA12S-600 Audio Control)	98.7
98-6	Dual Audio Control Installation	98.9
98-7	PA/Siren Installation	98.11
98-8A	Autopilot Installation	98.13
98-8B	Autopilot Installation	98.14
98-9	Garmin GDU 1060 Installation	98.15
98-9A	Garmin GDU 620 Installation	98.16
98-10	Garmin GSU 75 ADAHRS Installation	98.17
98-11	Garmin GDC 74H Air Data Computer Installation	98.19
98-12	Garmin GRS 77H AHRS Installation	98.21
98-13	Garmin GTN 6XX/7XX-series GPS Installation (G500H EFIS)	98.23
98-13A	Avidyne IFD 4XX/5XX-series GPS Installation	98.24A
98-13B	Garmin 500 Series GPS Installation	98.24C
98-13C	Garmin 500 Series GPS Installation	98.24D
98-14	Radar Altimeter Installation	98.25
98-15	Garmin GTX 3X5 Transponder Installation	98.27
98-16	Garmin GTX 33/328/330 ES Transponder Installation	98.29
98-17	Garmin GDL 69A XM Receiver Installation	98.31
98-18	Aspen EFD1000H Display Installation	98.33
98-19	Aspen EFD500H Display Installation	98.35
98-20	Garmin GTR 225B / GNC 225B NAV/COM Radio Installation	98.37
98-21	Garmin GTR 225B COM Radio Installation	98.39
98-22	Garmin GDL 88 ADS-B In Receiver Installation	98.41
98-23	Garmin GTN 6XX/7XX-series GPS Installation (Pilot-Side Console)	98.43
98-24	F060 Intercom System Installation (Garmin GMA 350HC Audio Control)	98.45
98-25A	F060-4, -5, -6 & -7 Intercom System Installation (Garmin GMA 350HC Audio Control)	98.45B
98-25B	F060-1 & -2 Intercom System Installation (Garmin GMA 350H Audio Control)	98.46

CHAPTER 98

WIRING DIAGRAMS (Continued)

Figure	Title	Page
98-26	Lithium-Ion Battery Installation	98.47
98-27	Heated Seats Installation	98.51
98-28	Cargo Hook Installation	98.53
98-29	External Load Controls	98.55
98-30	Copilot Instruments Installation	98.57
98-31	Bubble Door Fans Installation	98.59
98-32	Dual Low Fuel Warning Light Installation	98.61
98-33	Fuel Flow Meter Installation	98.61
98-34	Pressure Fueling System Installation	98.63

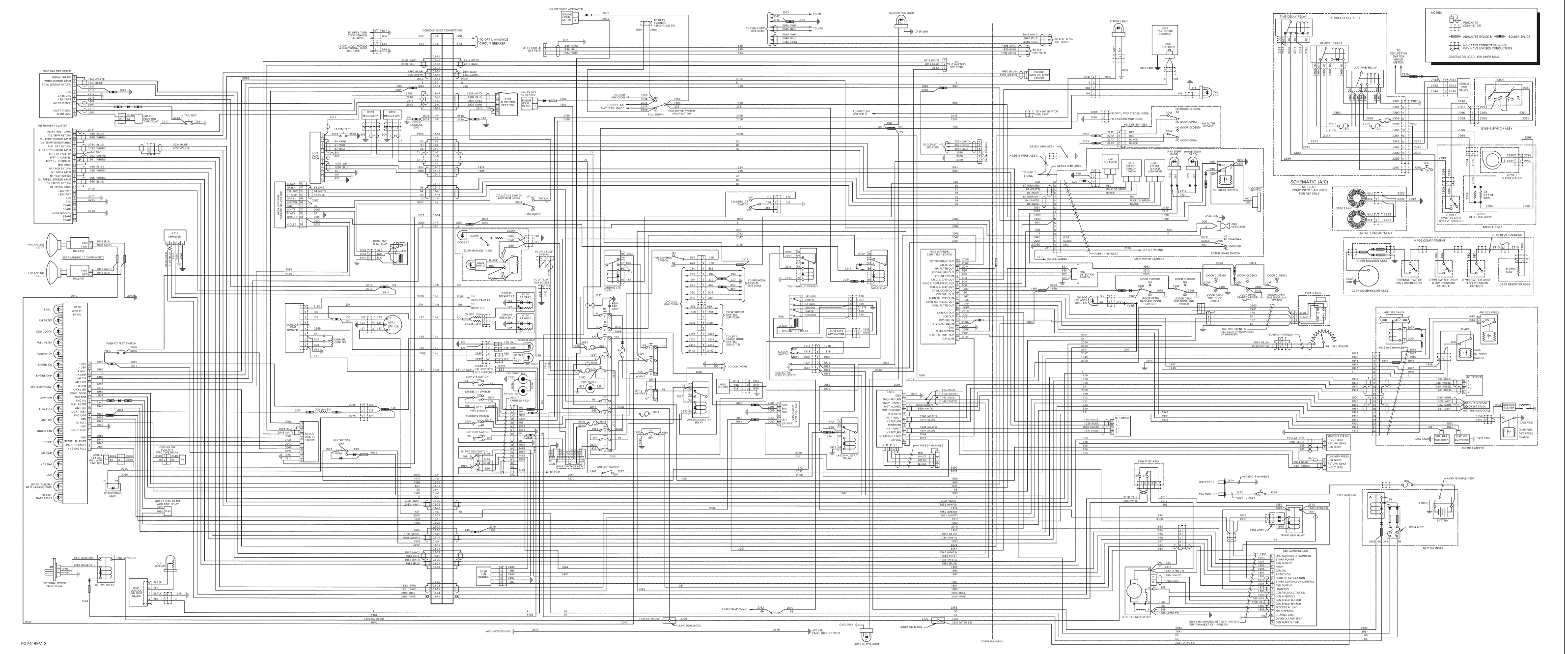

FIGURE 98-1 R66 ELECTRICAL SYSTEM (REVISION X)

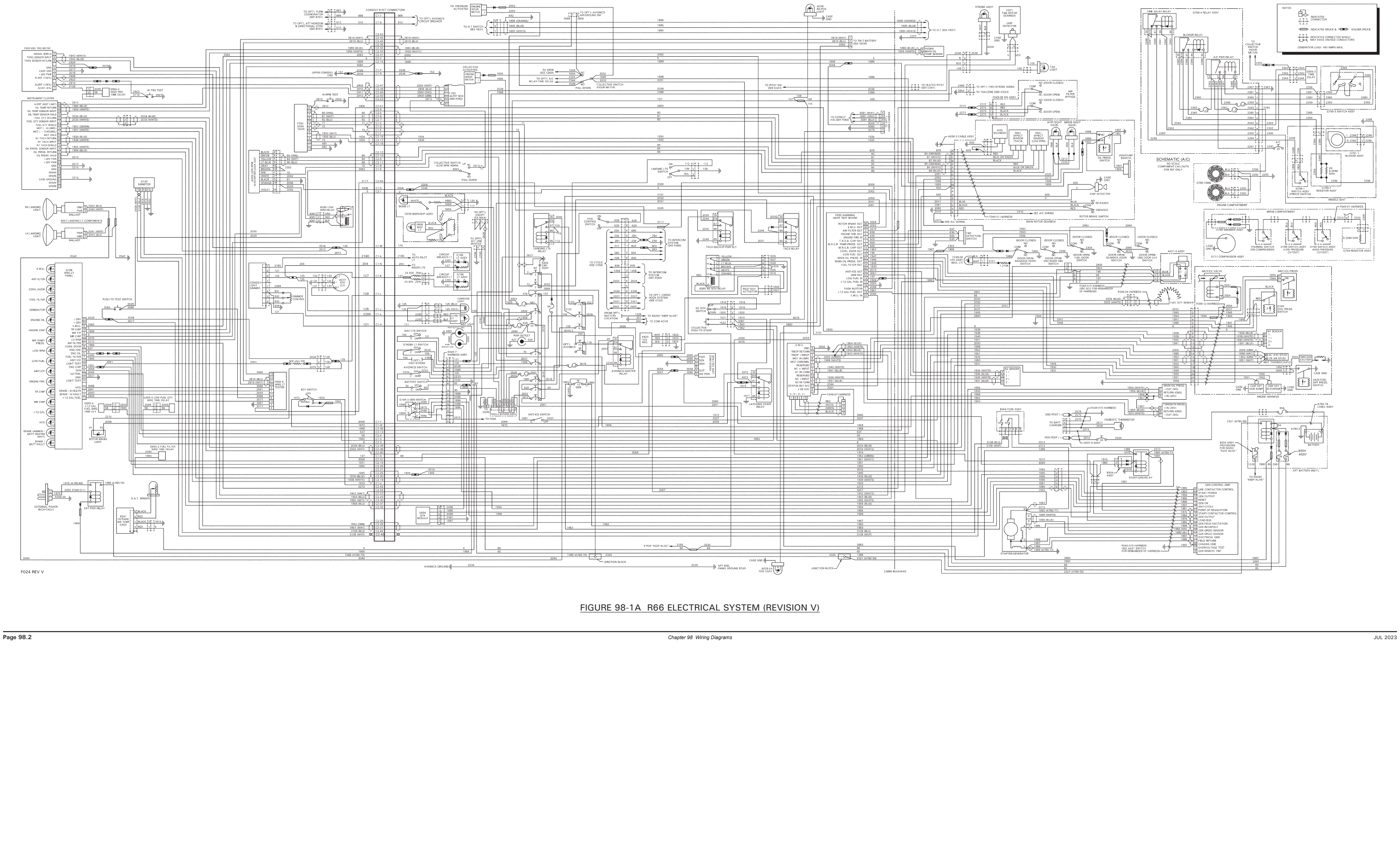

F024 REV V

FIGURE 98-1A R66 ELECTRICAL SYSTEM (REVISION V)

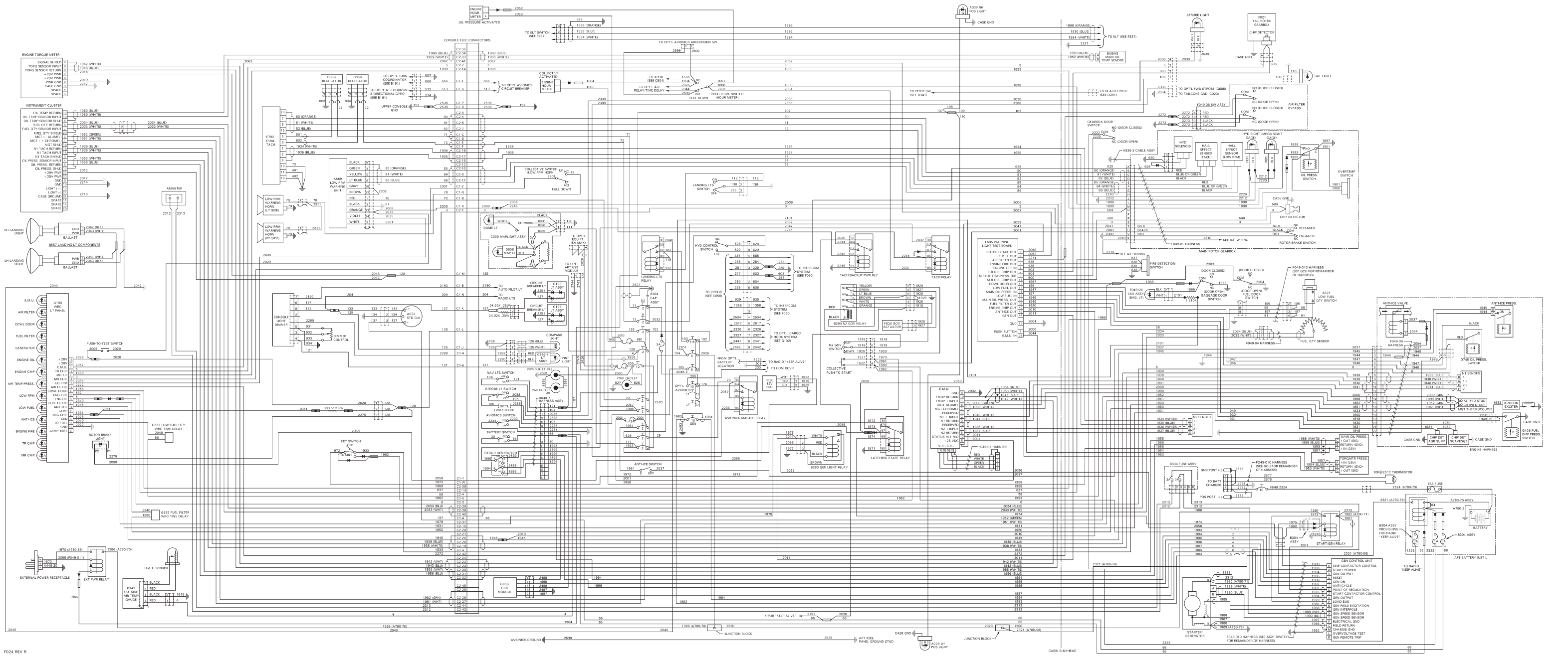

FIGURE 98-2A R66 ELECTRICAL SYSTEM (F024-2 REVISION R)

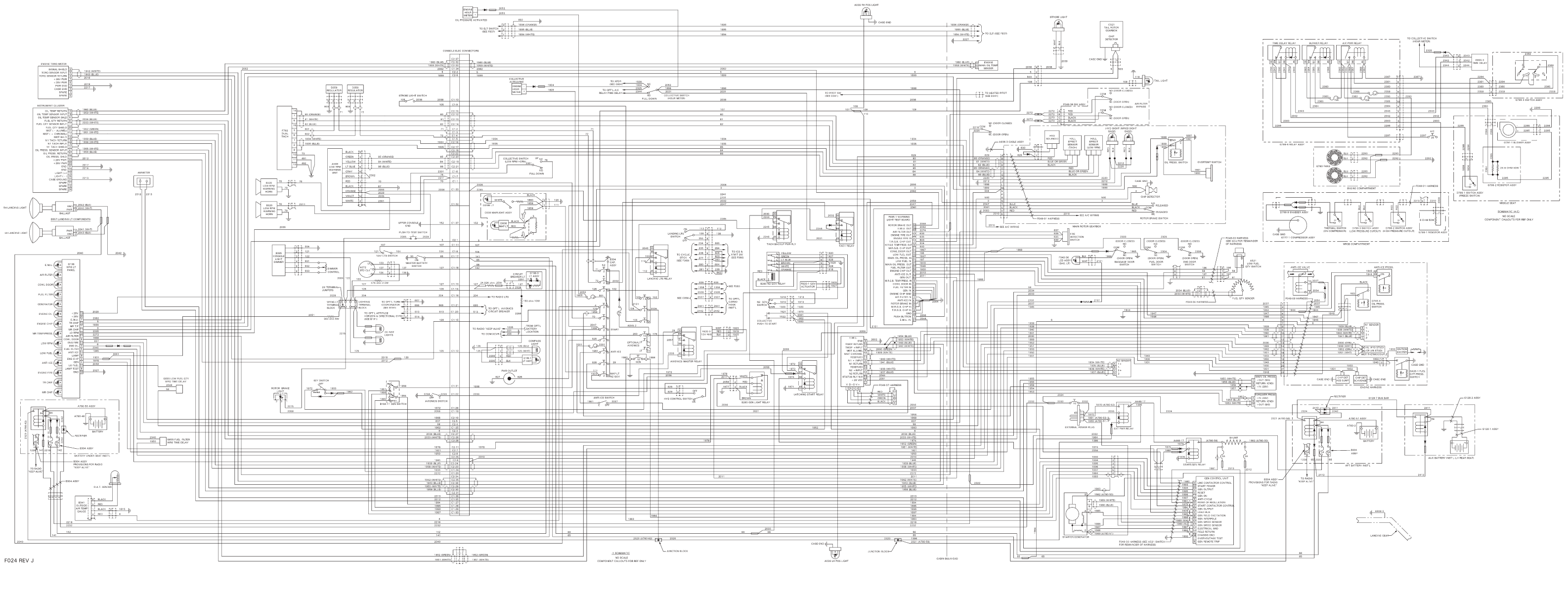

FIGURE 98-2B R66 ELECTRICAL SYSTEM (F024-1 REVISION J)

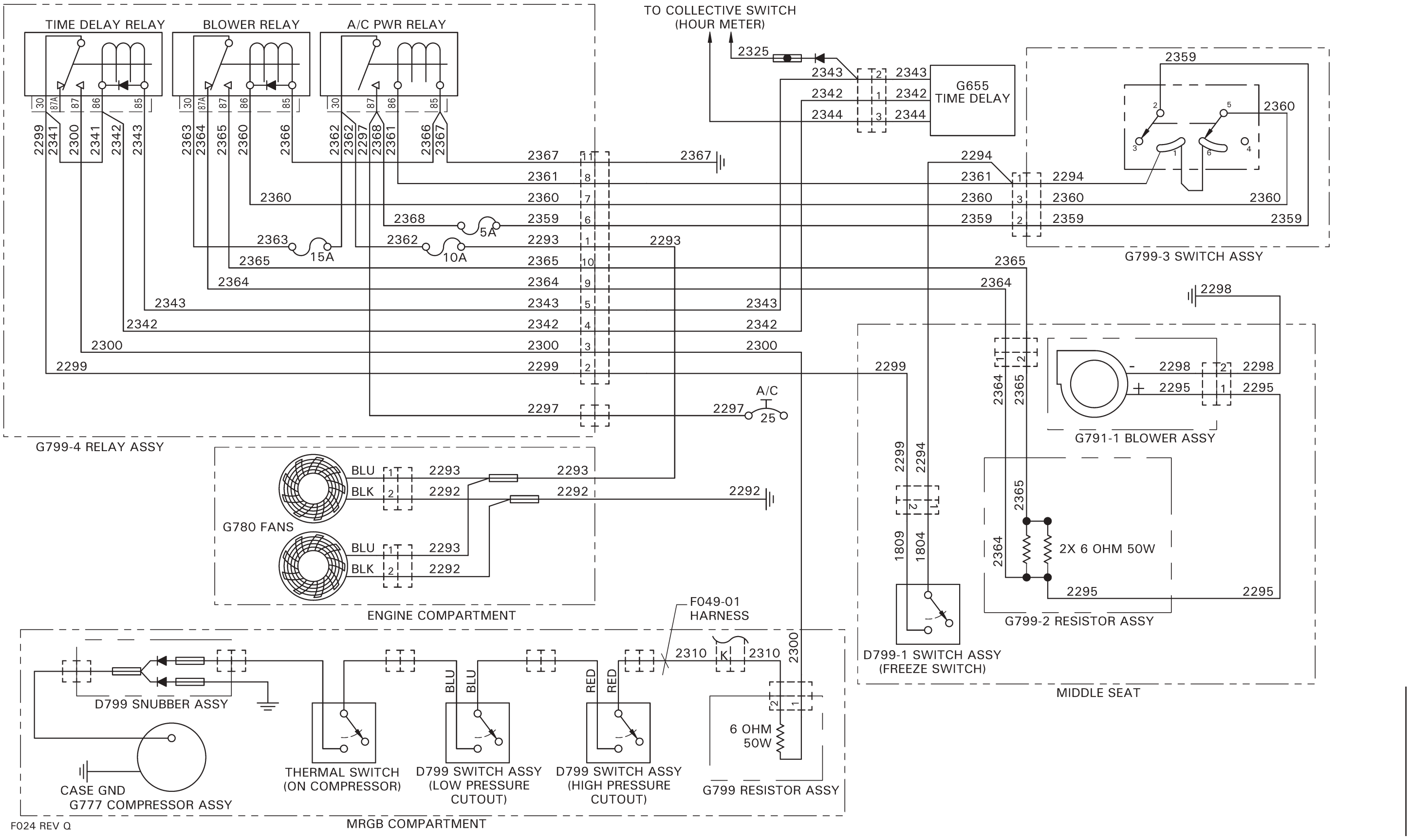

FIGURE 98-3 AIR CONDITIONING INSTALLATION

Intentionally Blank

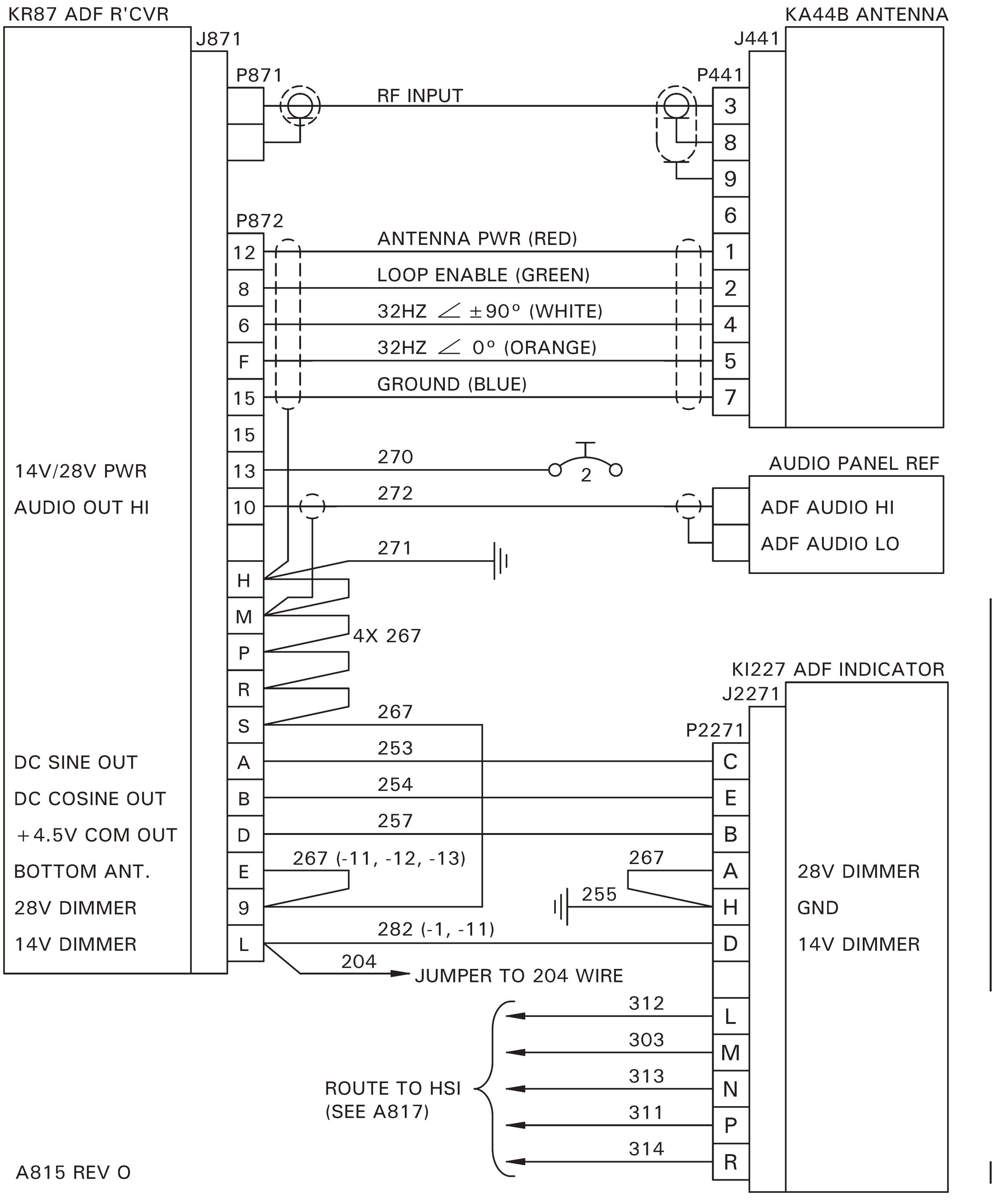

FIGURE 98-4 ADF INSTALLATION

Intentionally Blank

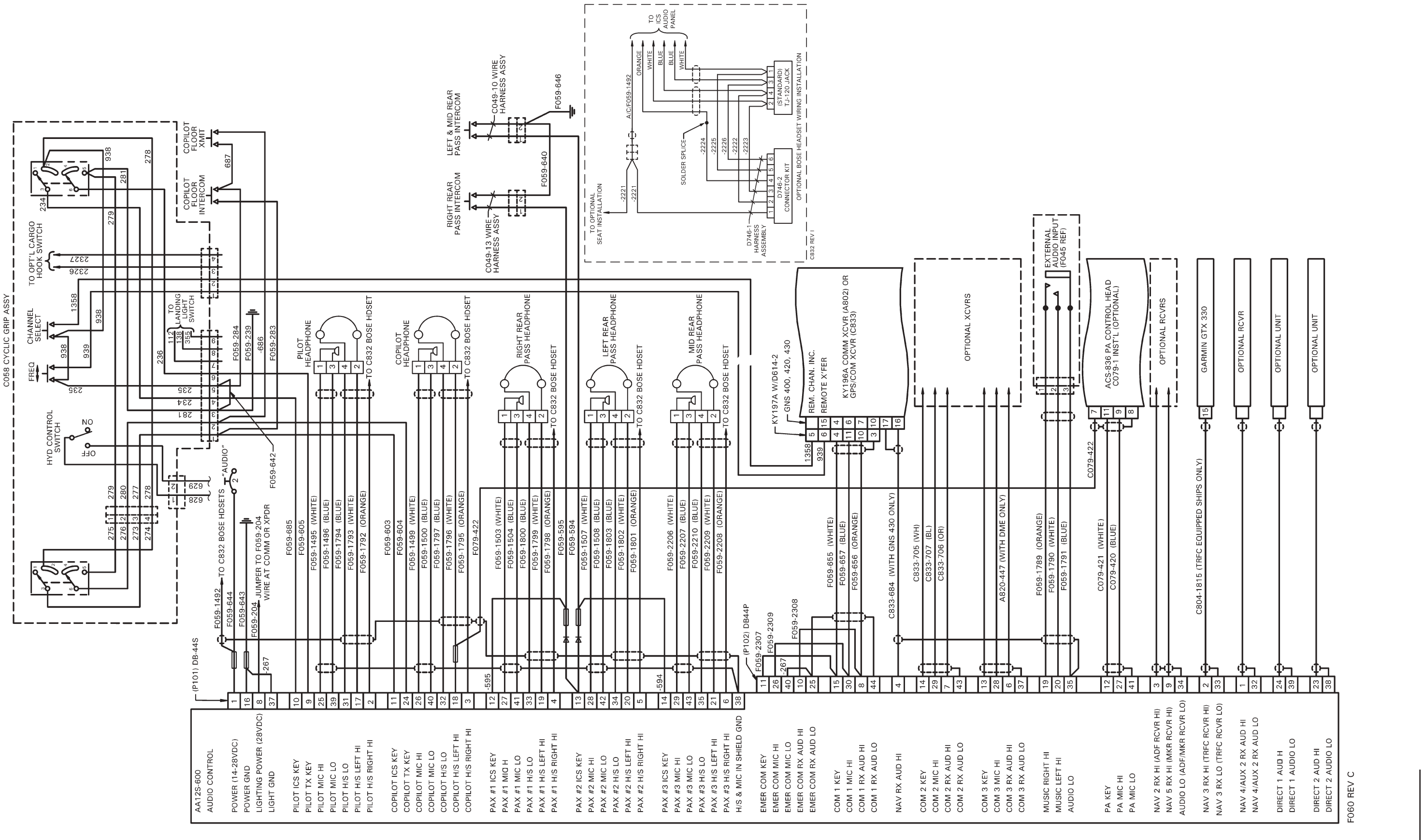

FIGURE 98-5 STANDARD AUDIO INSTALLATION (NAT AA12S-600 AUDIO CONTROL)

Intentionally Blank

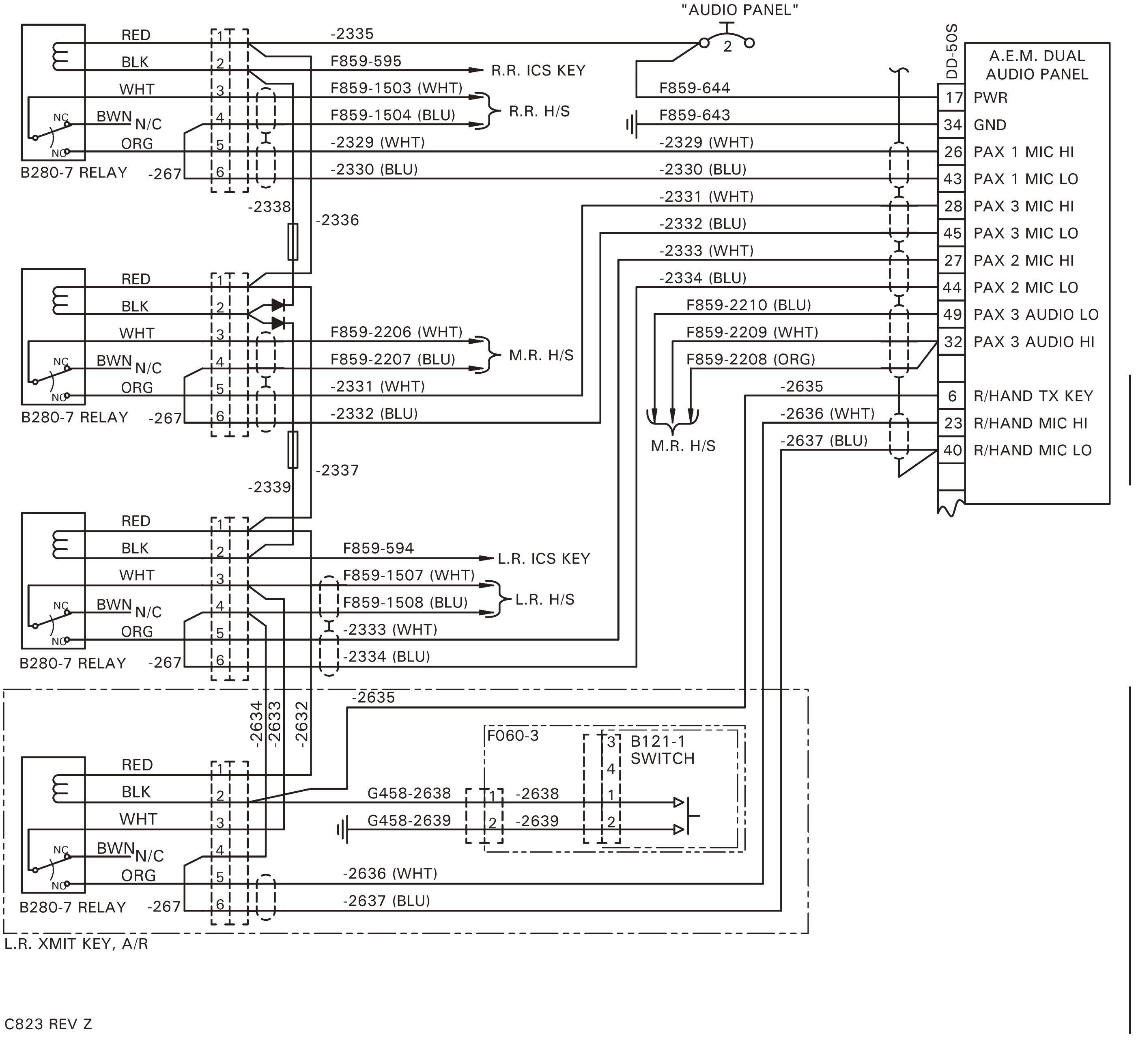

FIGURE 98-6 DUAL AUDIO CONTROL INSTALLATION

Intentionally Blank

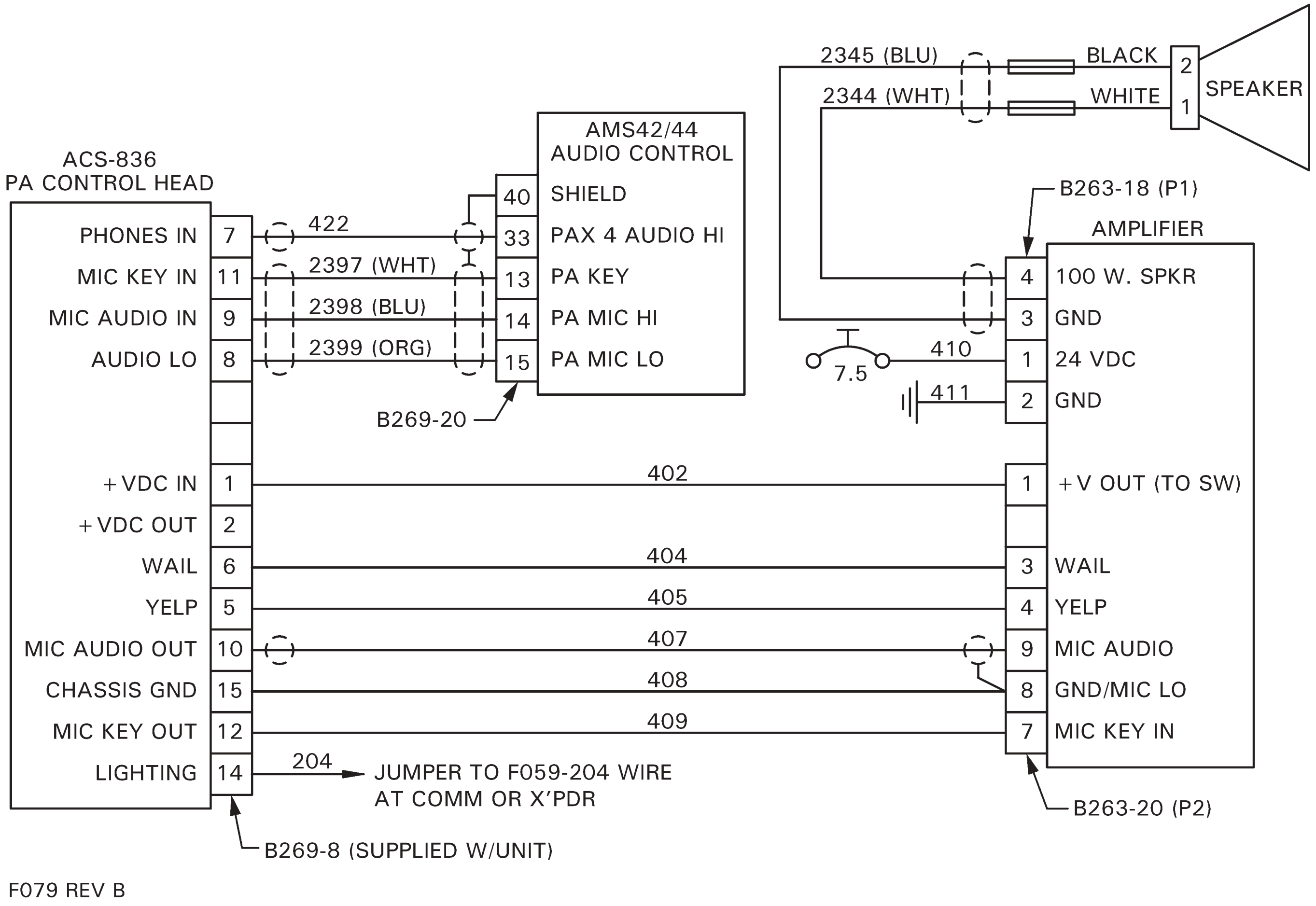

FIGURE 98-7 PA/SIREN INSTALLATION

Intentionally Blank

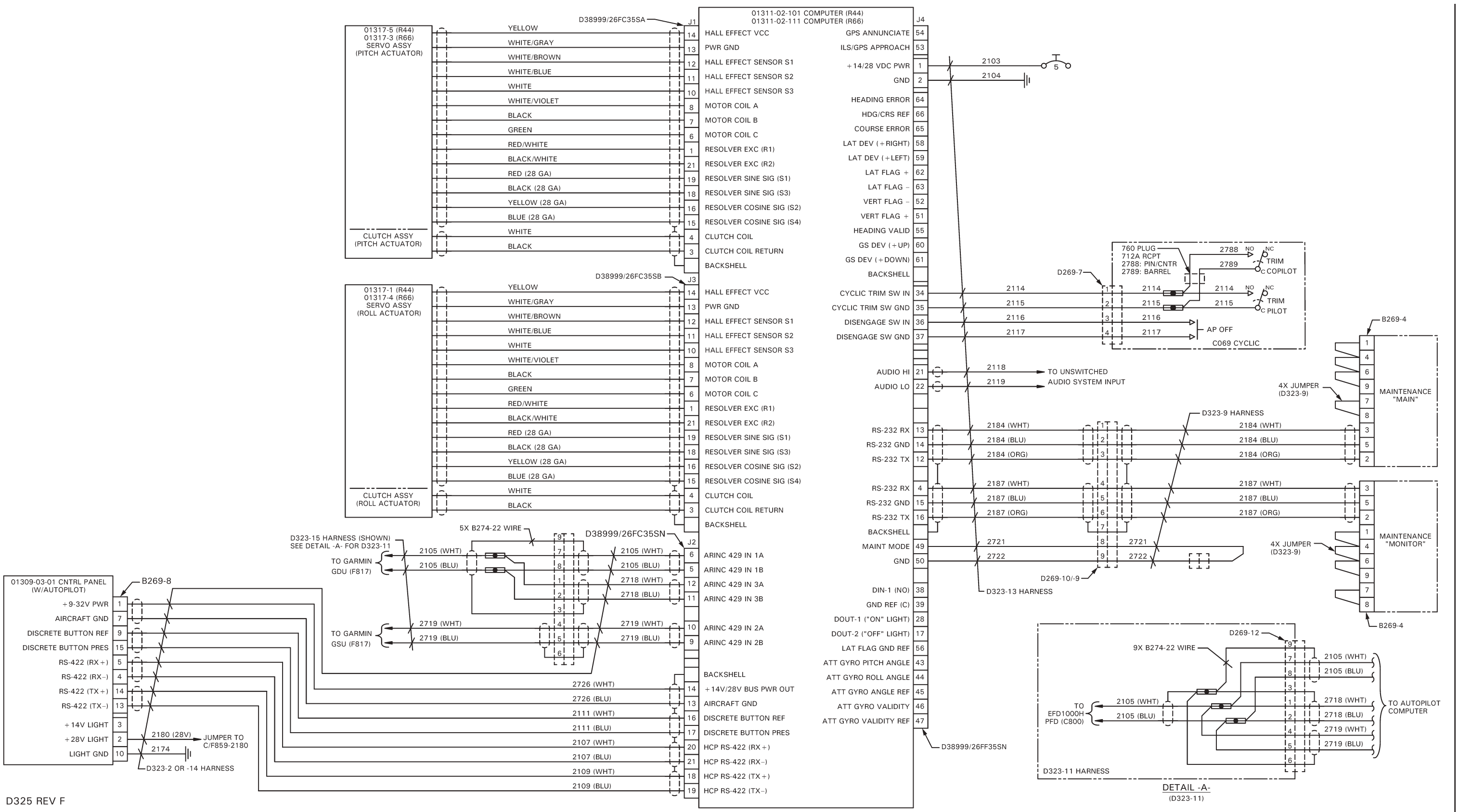

FIGURE 98-8A D325-1 AUTOPILOT (HELISAS, WITHOUT BC MODE) SCHEMATIC

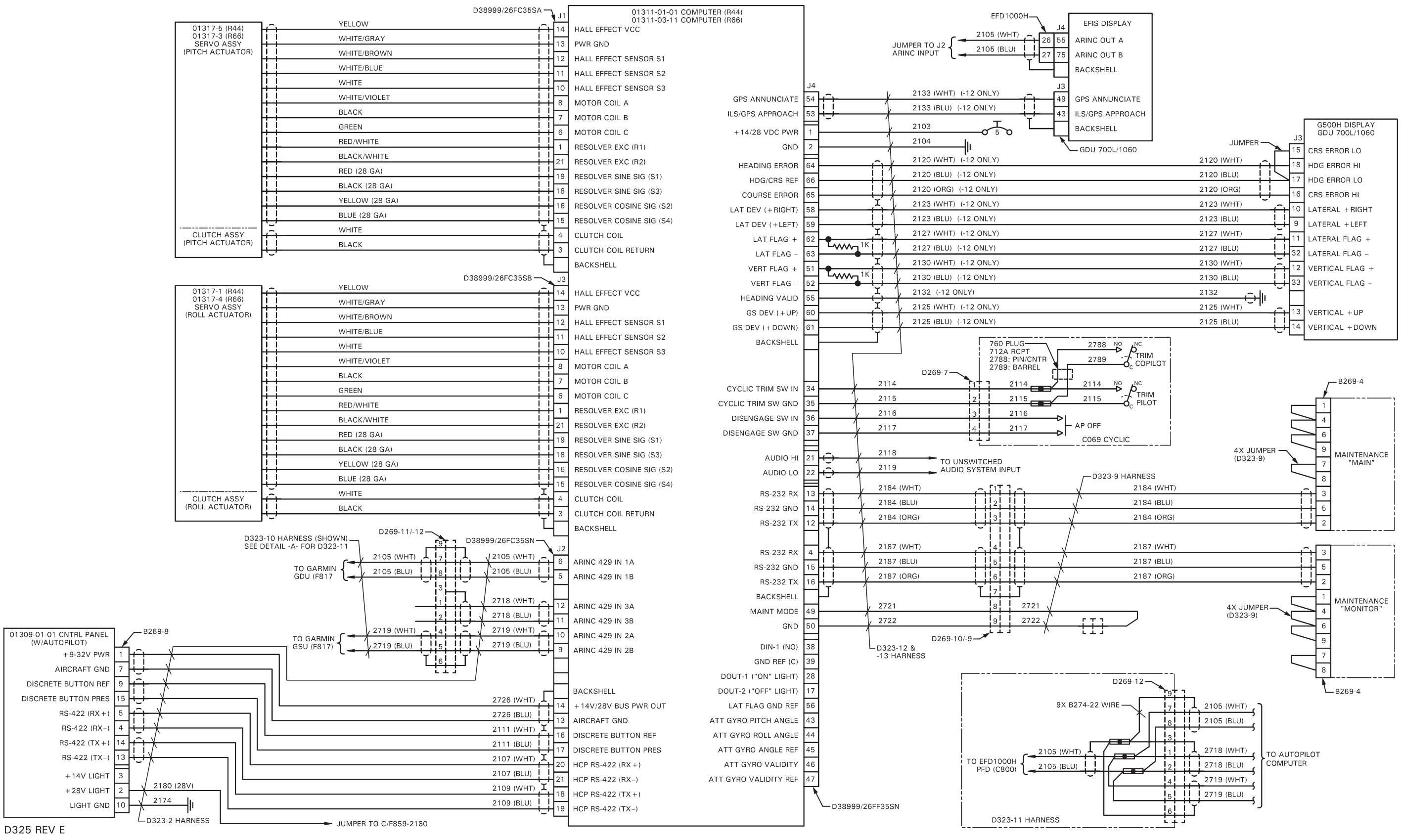

FIGURE 98-8B D325-1 AUTOPILOT (HELISAS, WITH BC MODE) SCHEMATIC

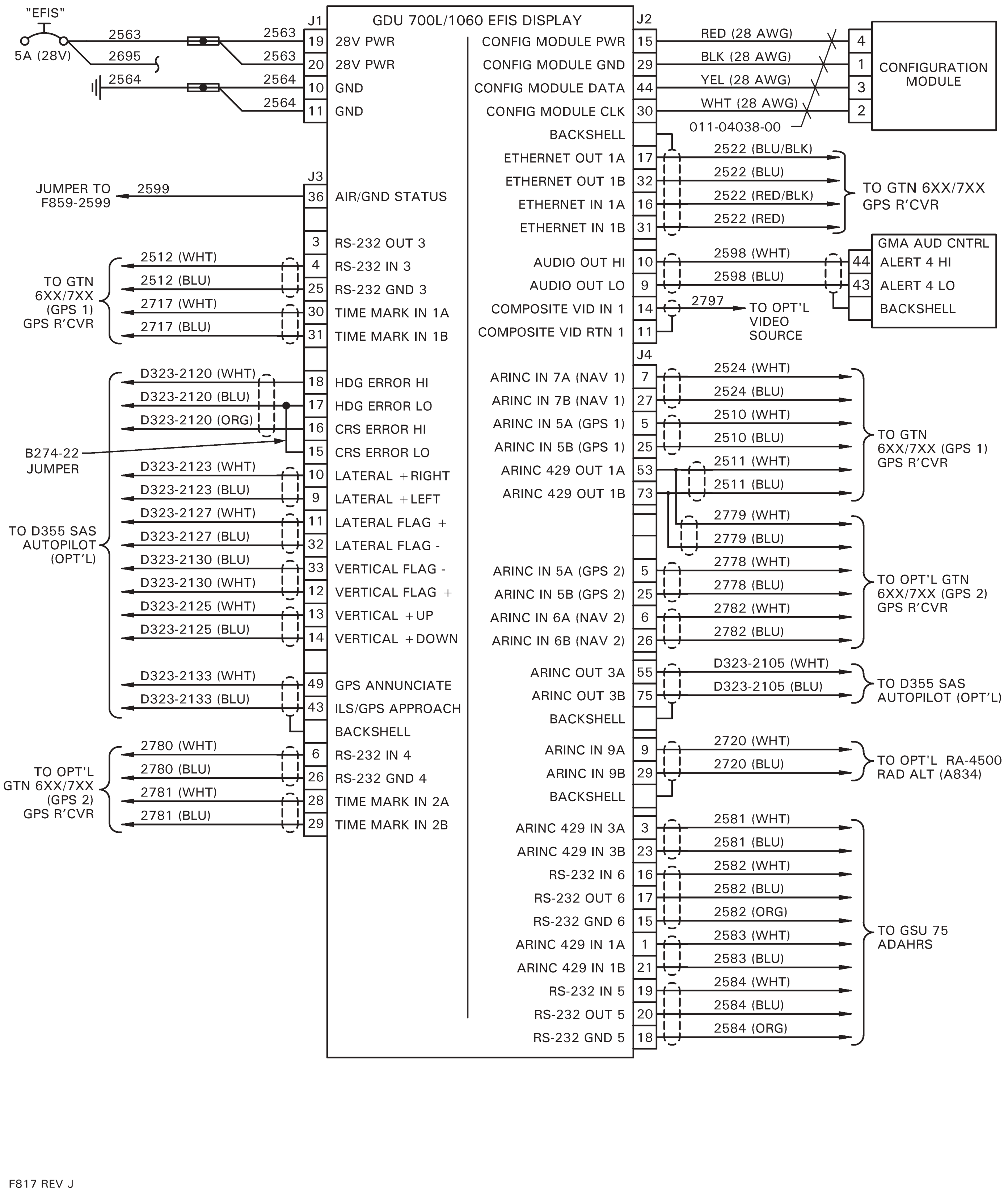

FIGURE 98-9 GARMIN GDU 1060 INSTALLATION

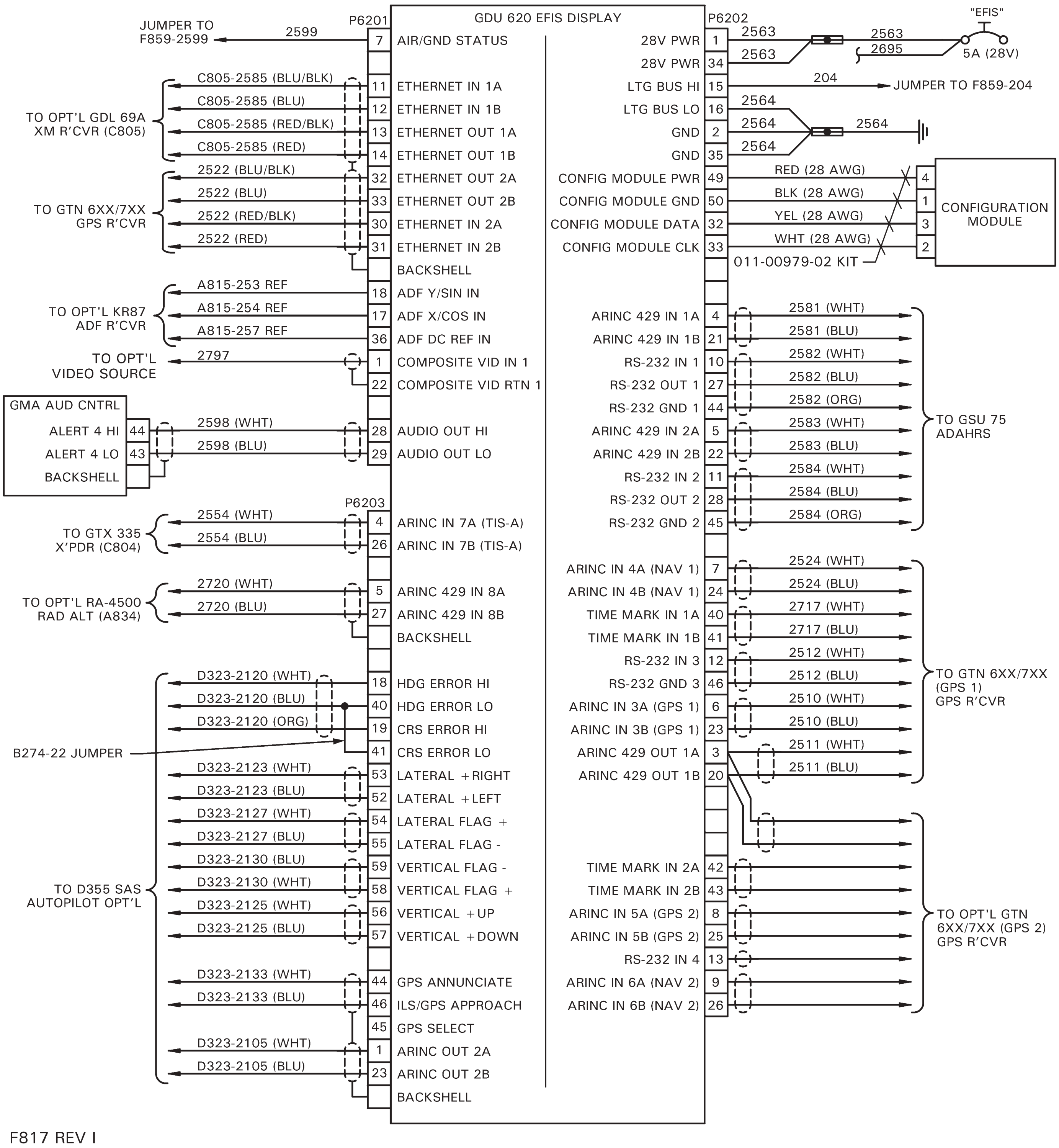

FIGURE 98-9A GARMIN GDU 620 INSTALLATION

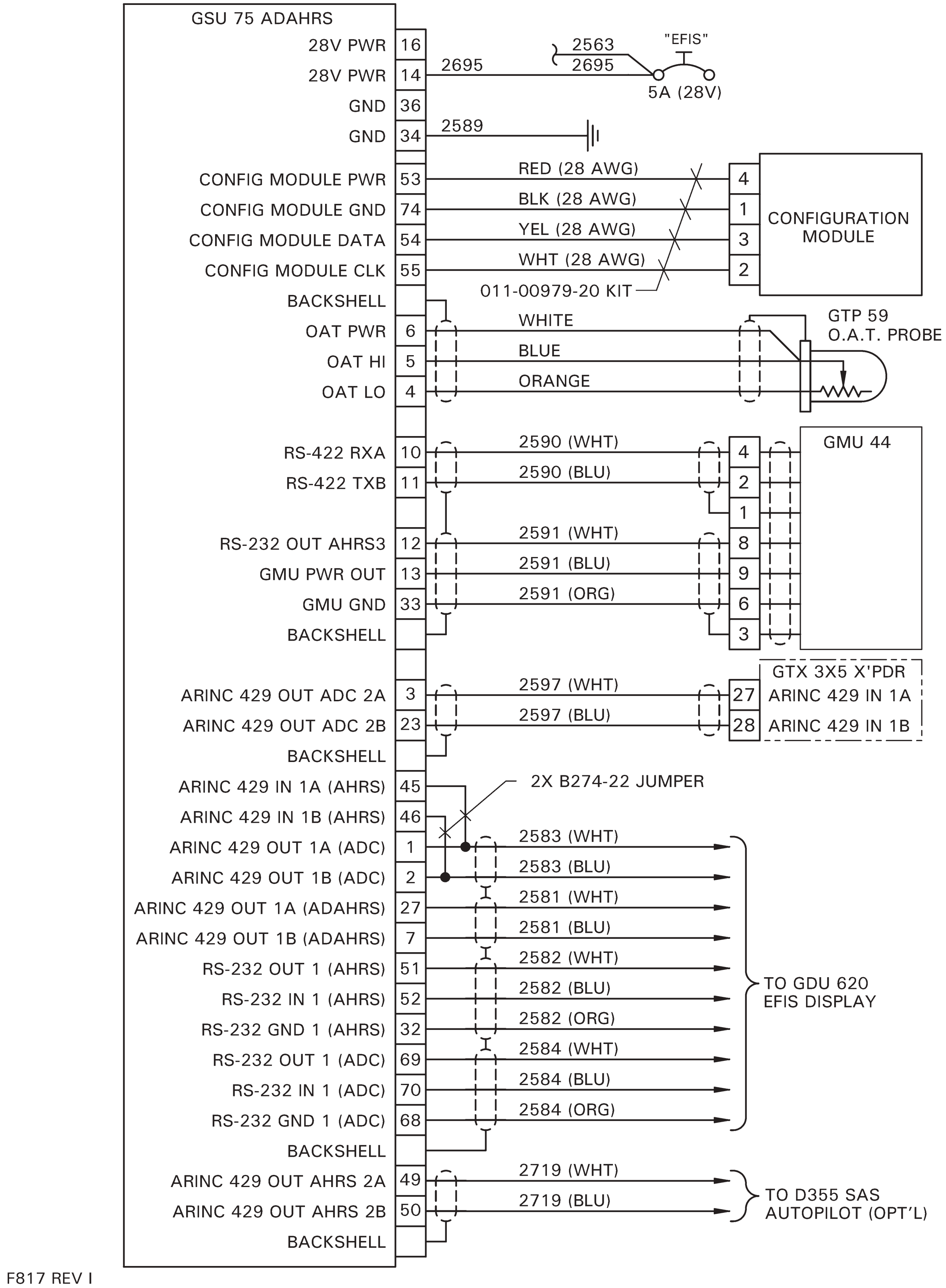

FIGURE 98-10 GARMIN GSU 75 ADAHRS INSTALLATION

Intentionally Blank

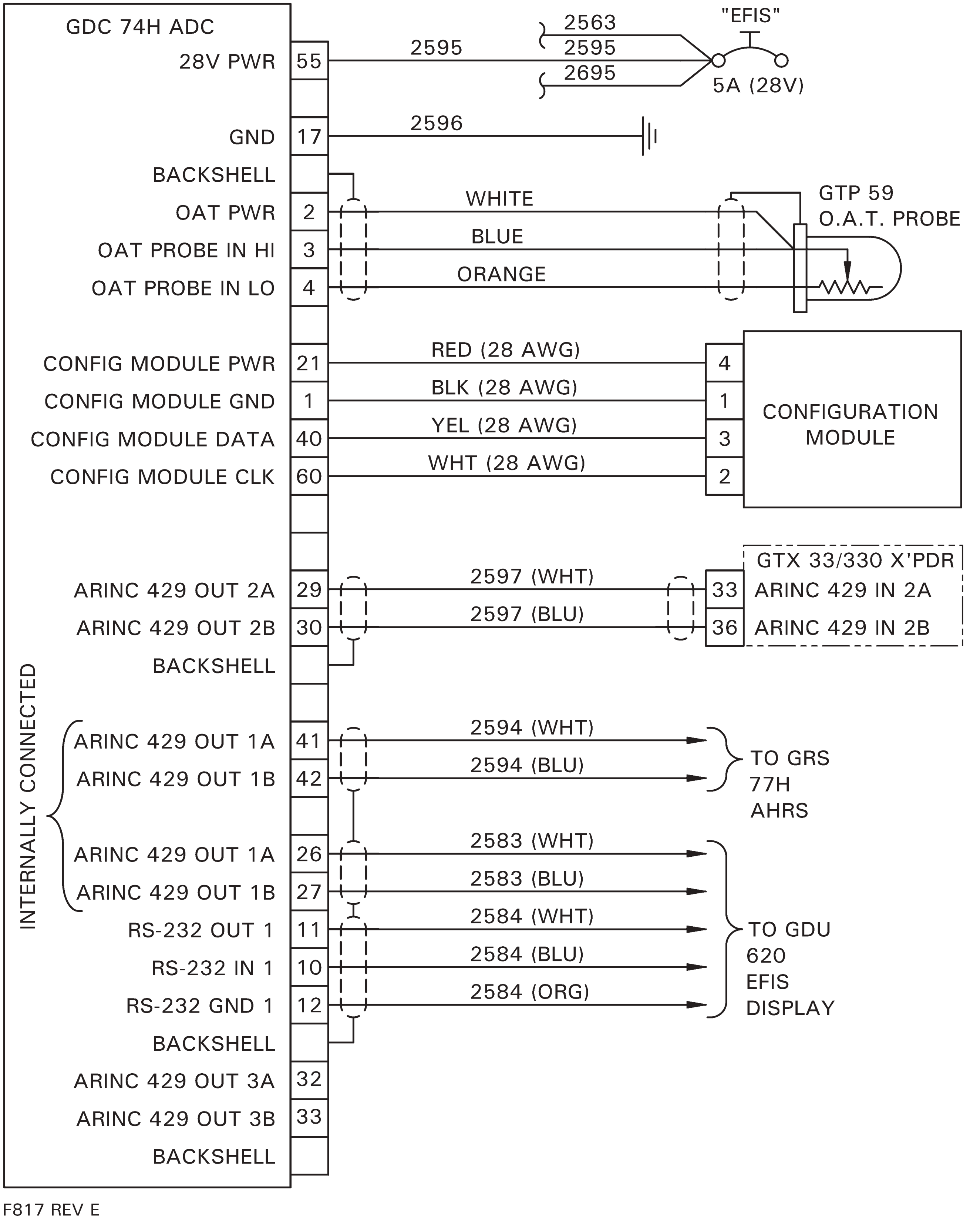

FIGURE 98-11 GARMIN GDC 74H AIR DATA COMPUTER INSTALLATION

Intentionally Blank

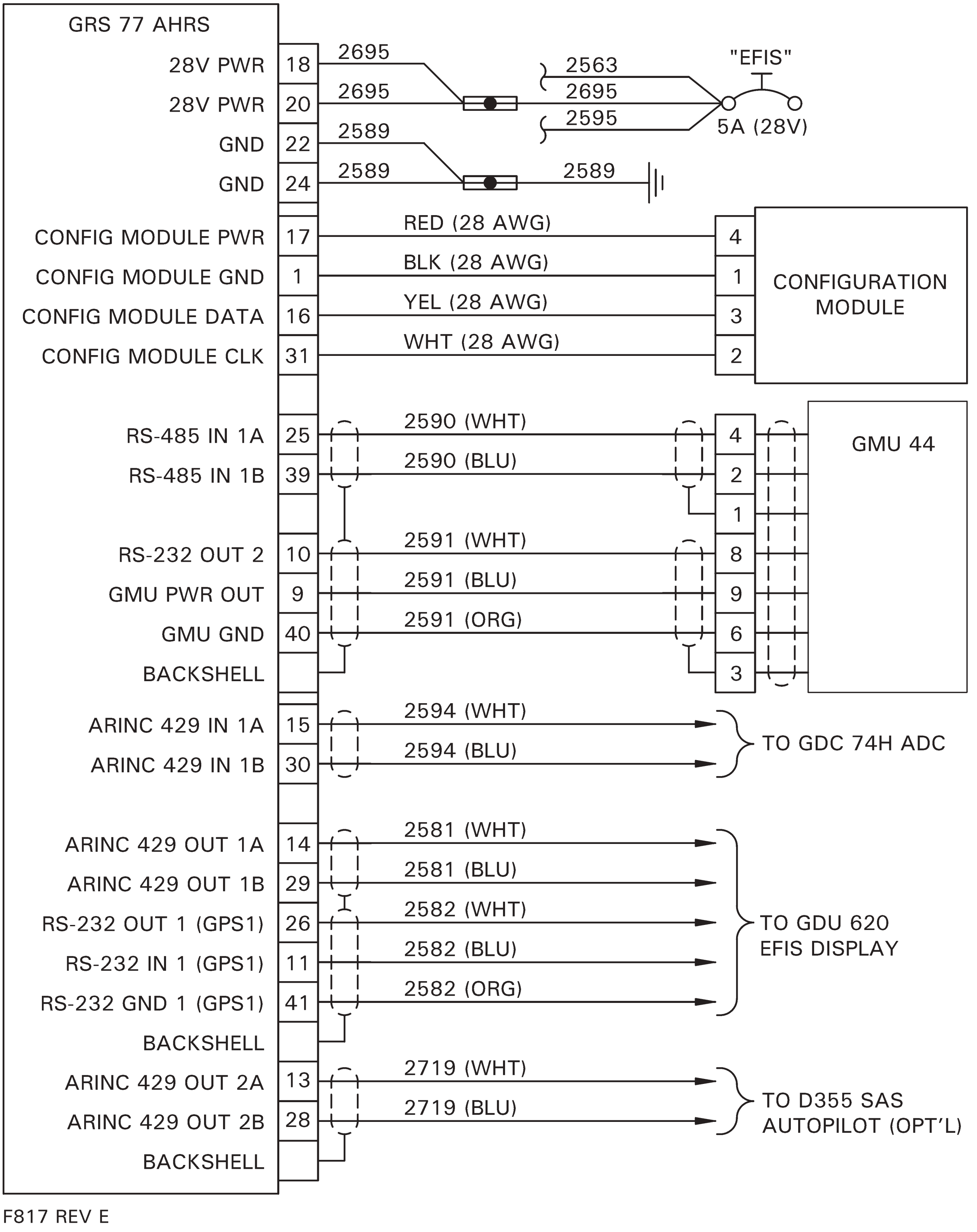

FIGURE 98-12 GARMIN GRS 77H AHRS INSTALLATION

Intentionally Blank

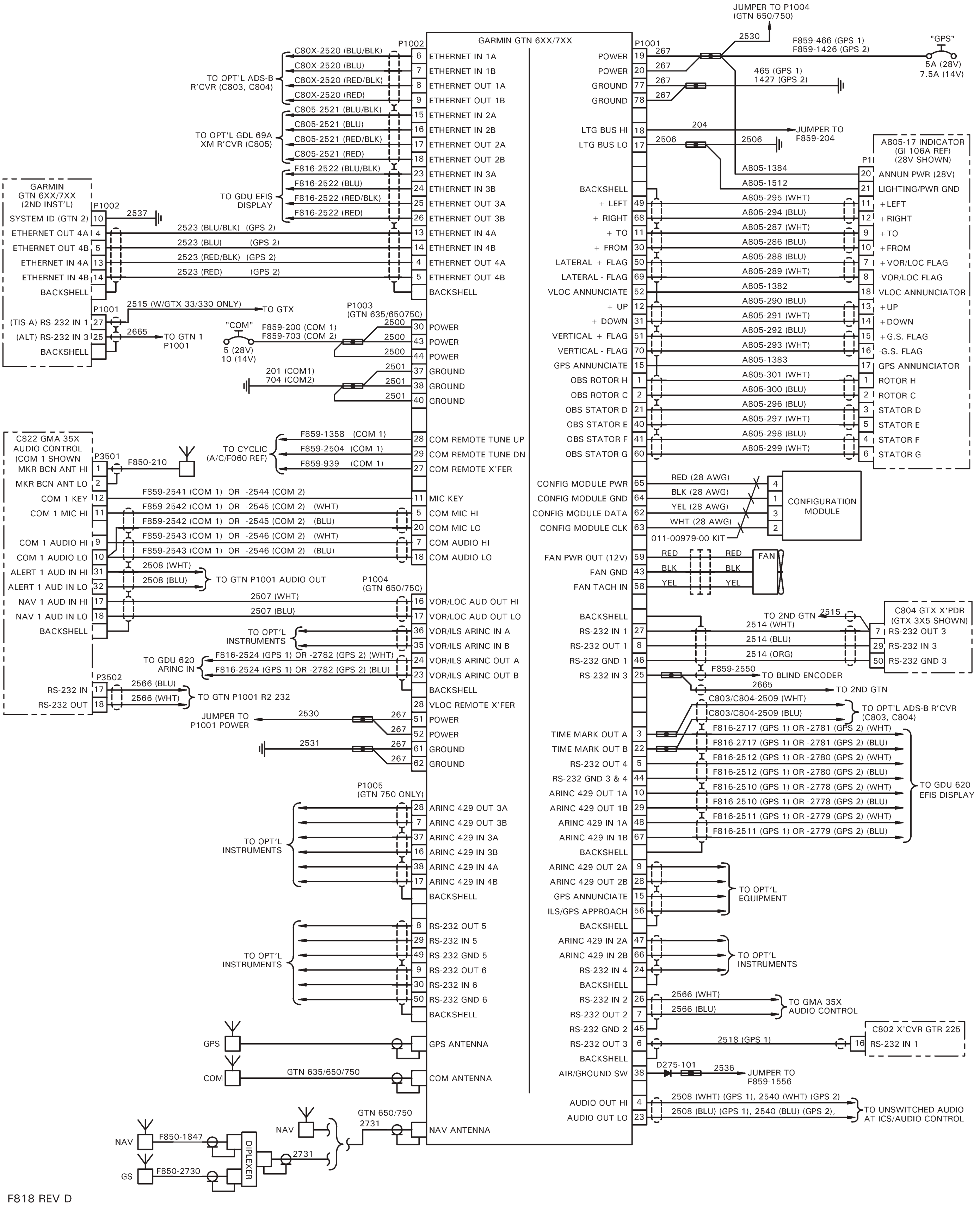

FIGURE 98-13 GARMIN GTN 6XX/7XX-SERIES GPS INSTALLATION (G500H EFIS)

Intentionally Blank

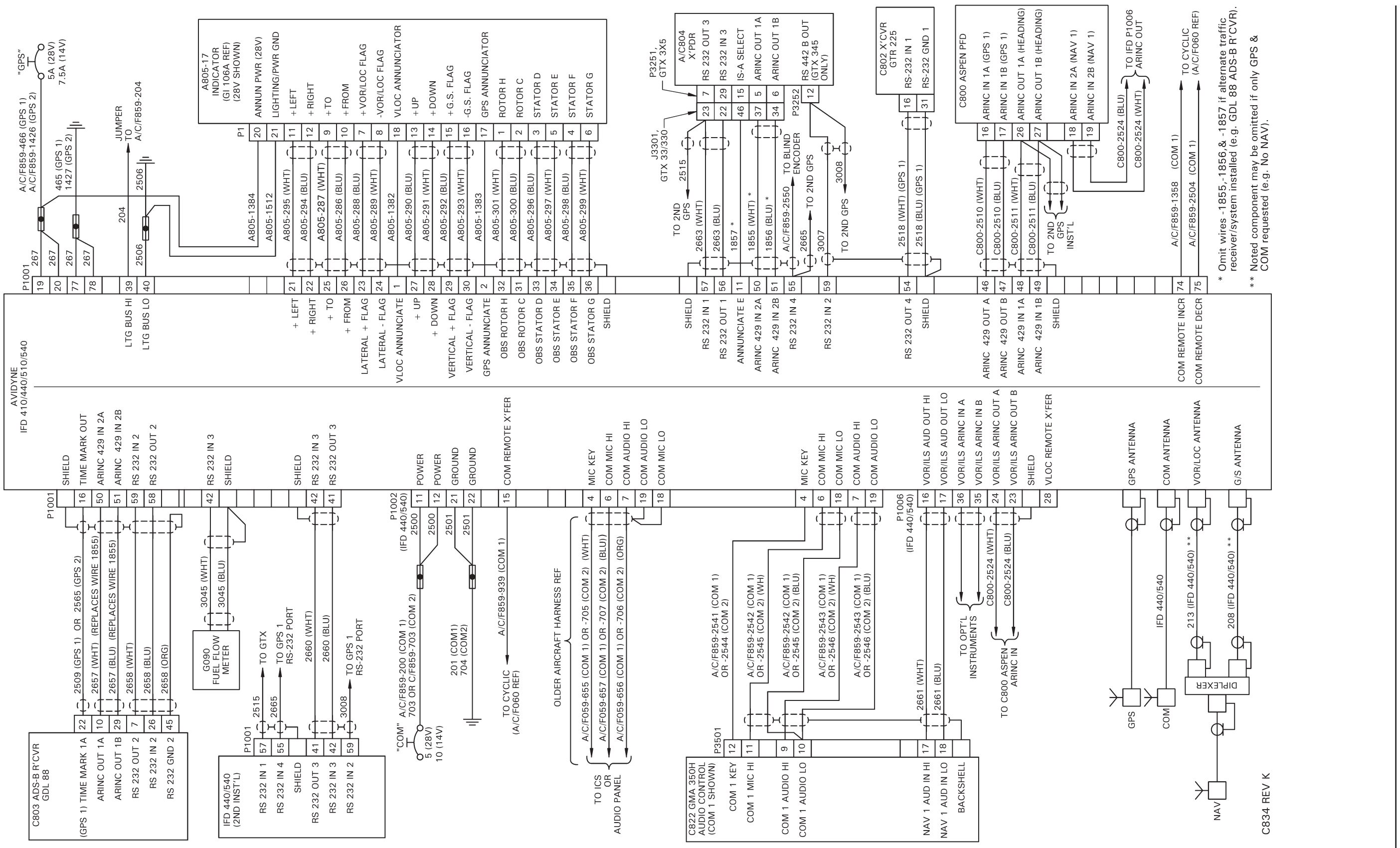

FIGURE 98-13A AVYIDYNE IFD 4XX/5XX-SERIES INSTALLATION

Intentionally Blank

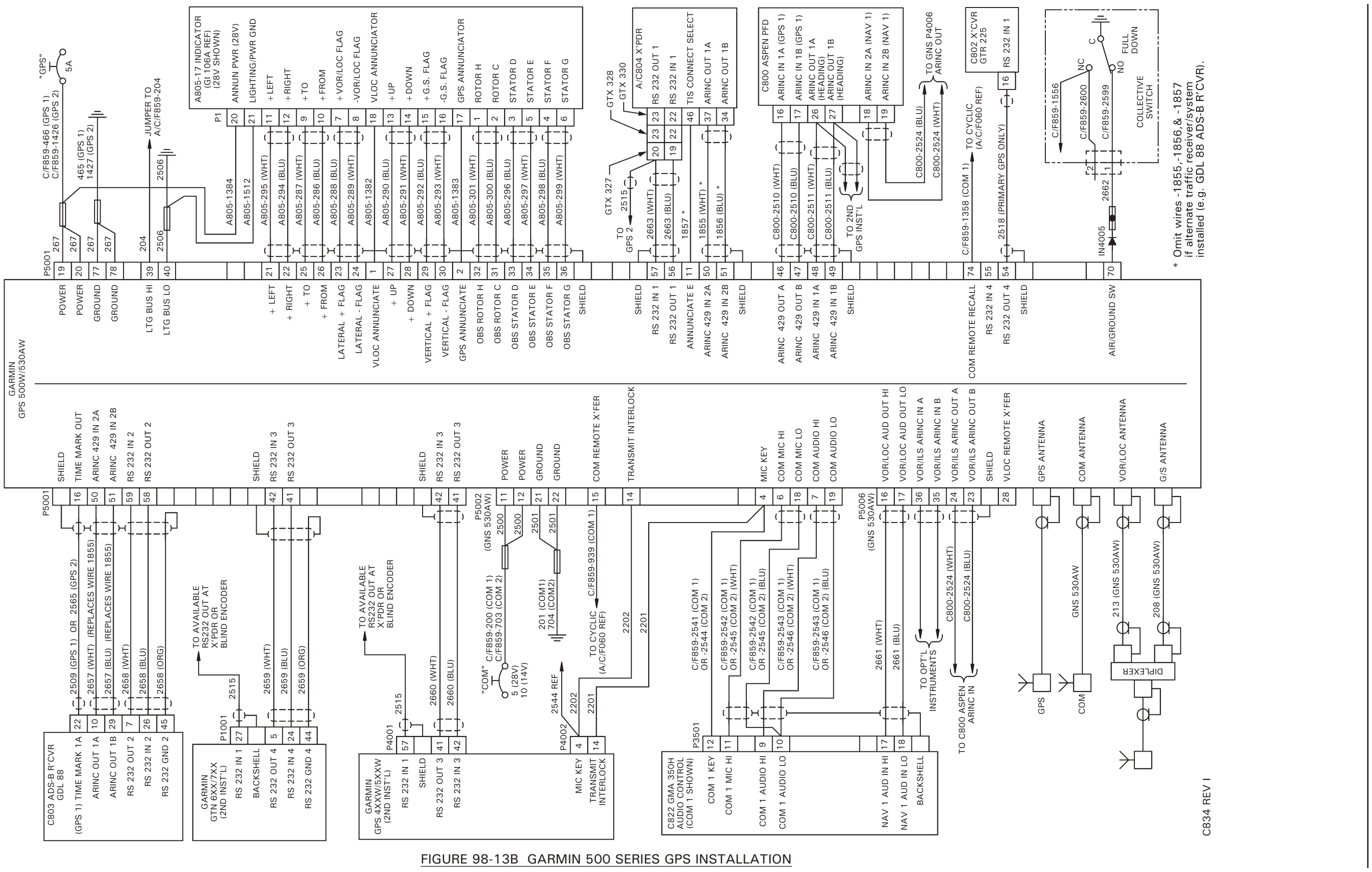

FIGURE 98-13B GARMIN 500 SERIES GPS INSTALLATION

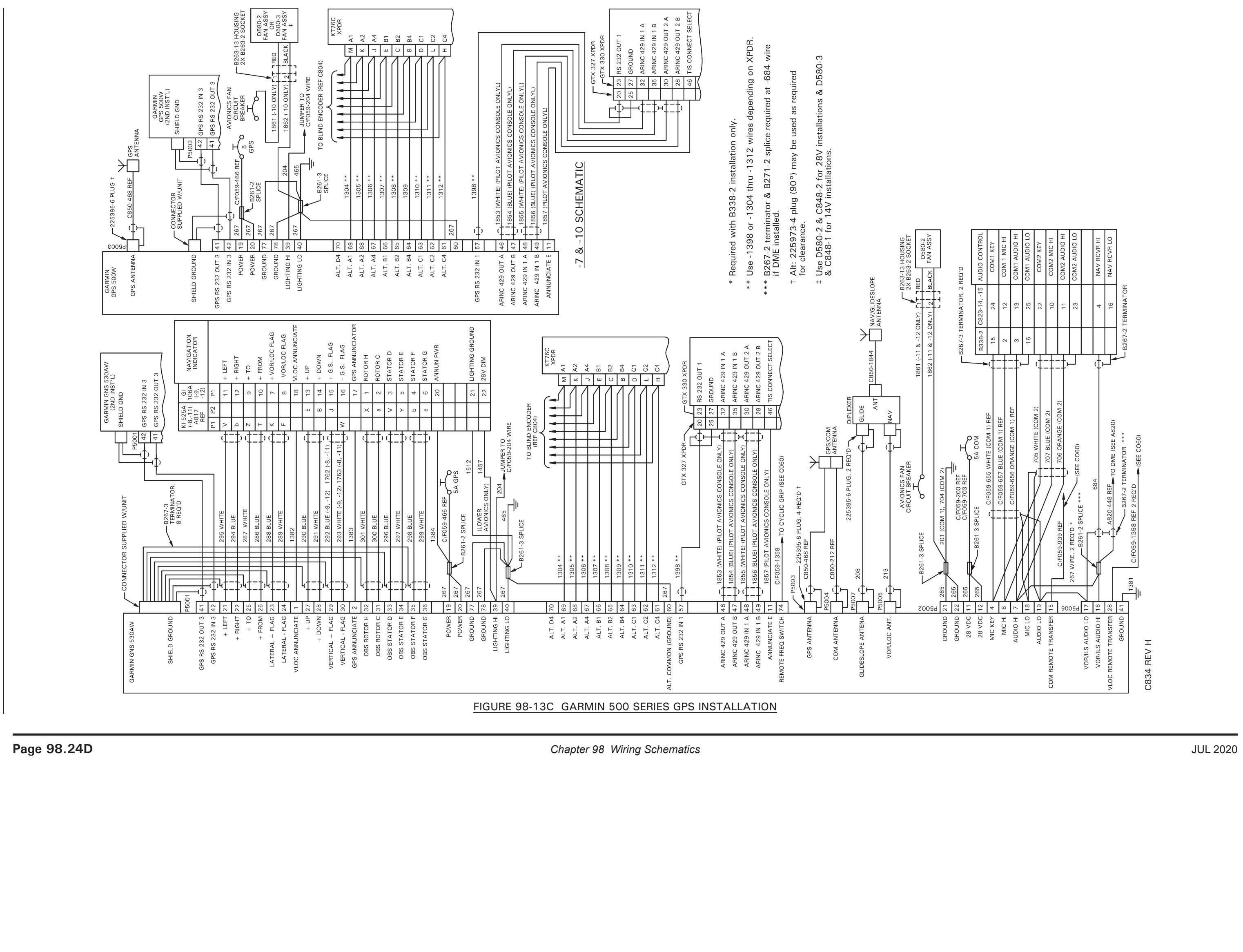

FIGURE 98-13C GARMIN 500 SERIES GPS INSTALLATION

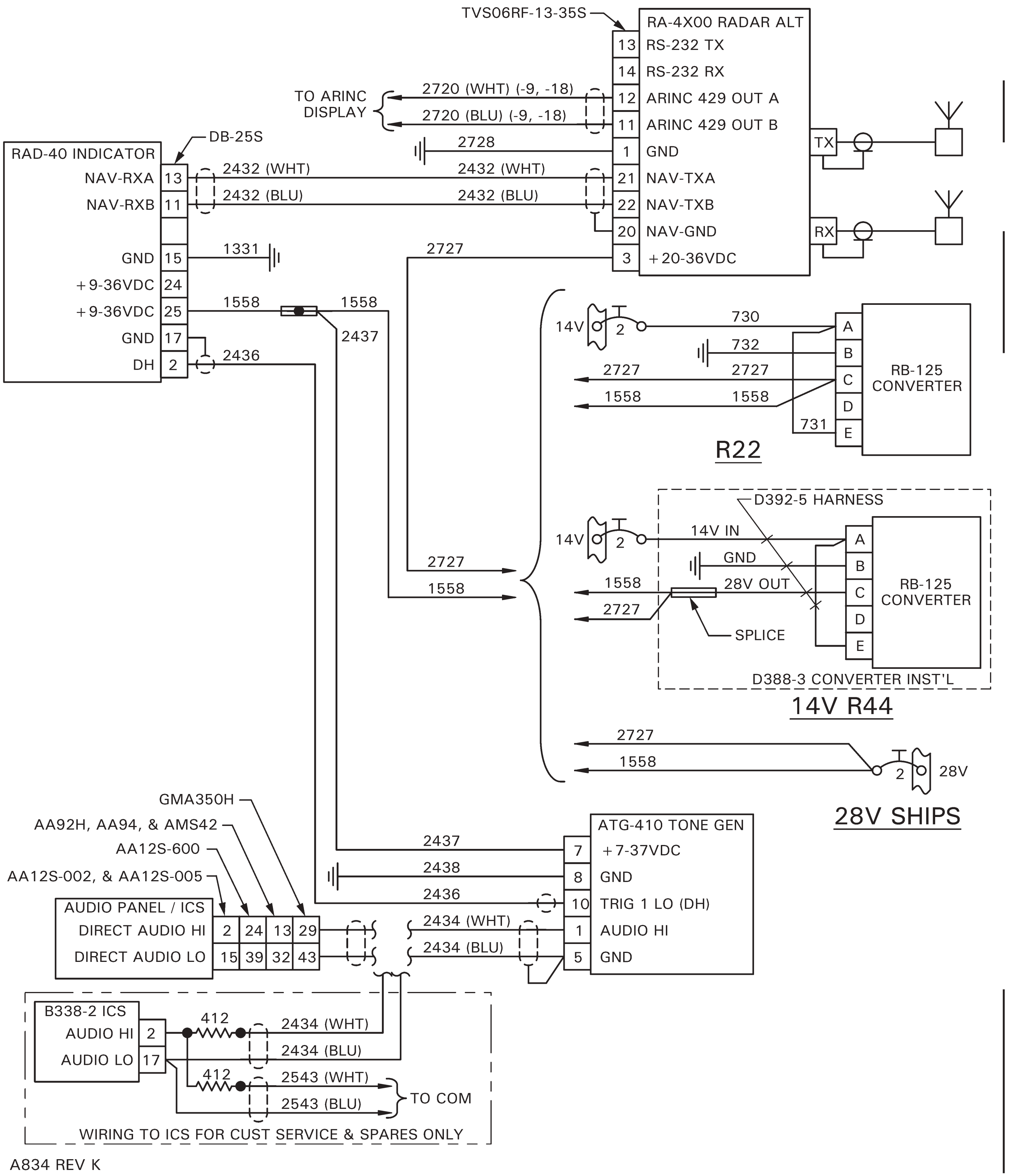

FIGURE 98-14 RADAR ALTIMETER INSTALLATION

Intentionally Blank

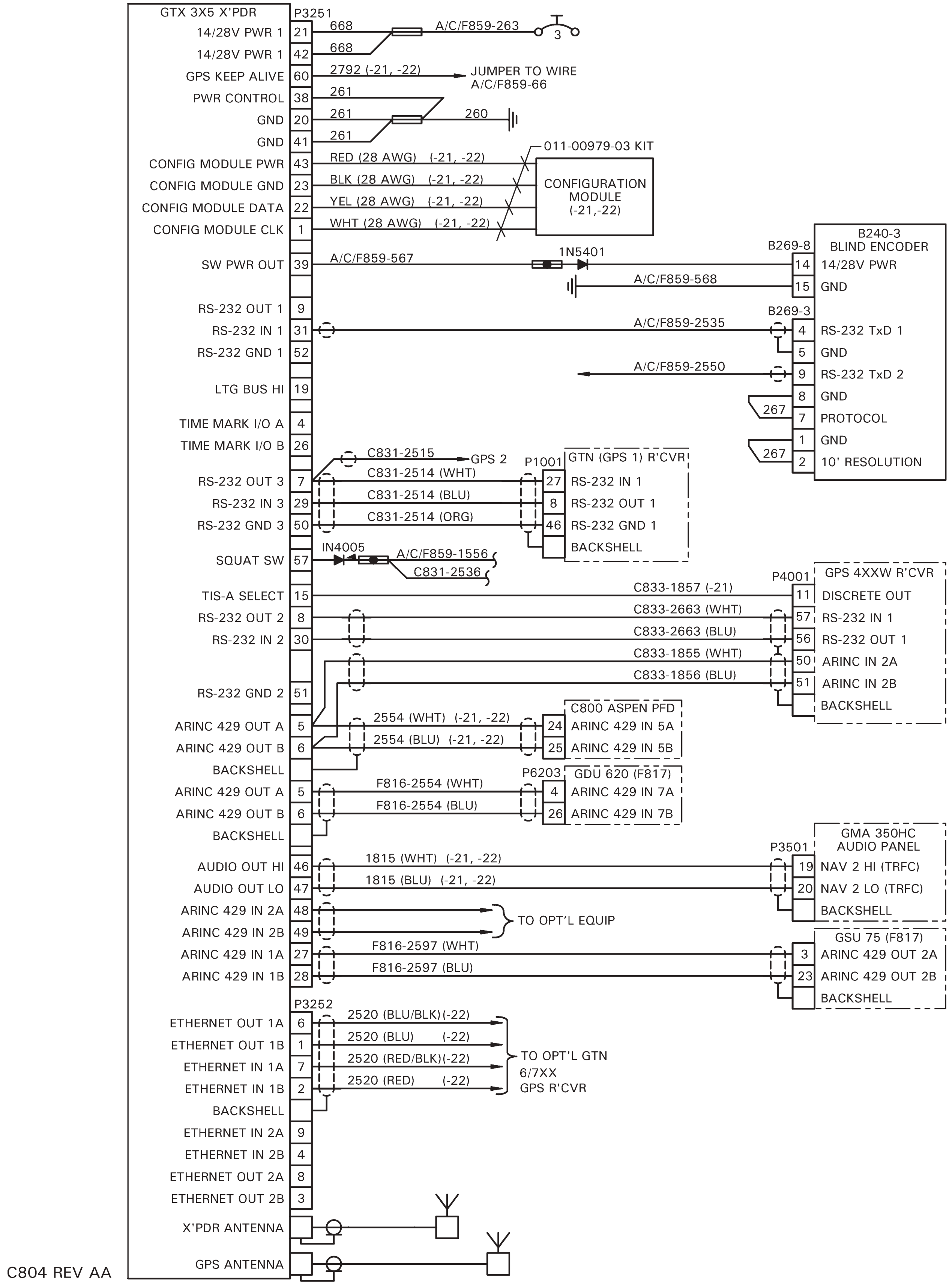

FIGURE 98-15 GARMIN GTX 3X5 TRANSPONDER INSTALLATION

Intentionally Blank

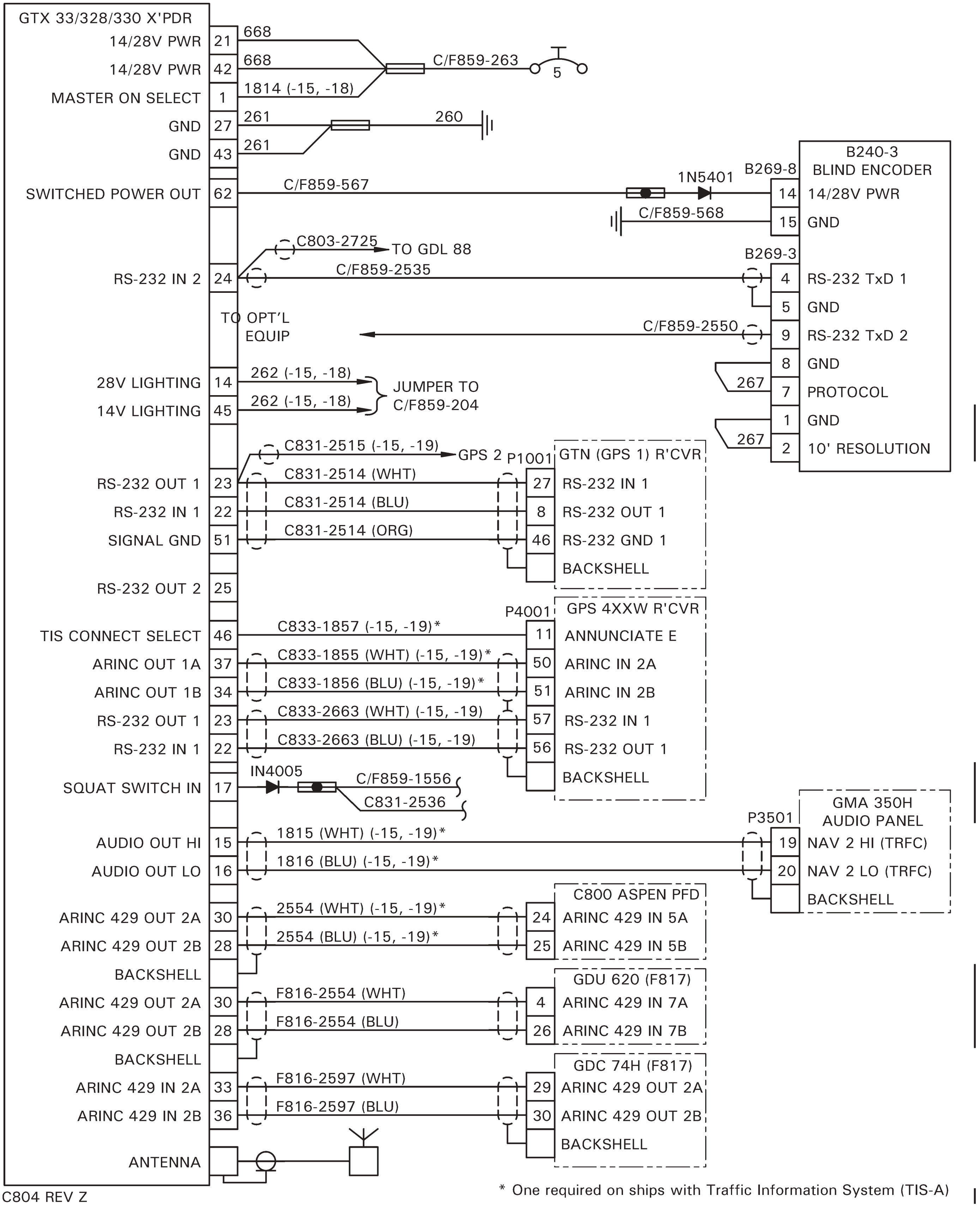

FIGURE 98-16 GARMIN GTX 33/328/330 ES TRANSPONDER INSTALLATION

Intentionally Blank

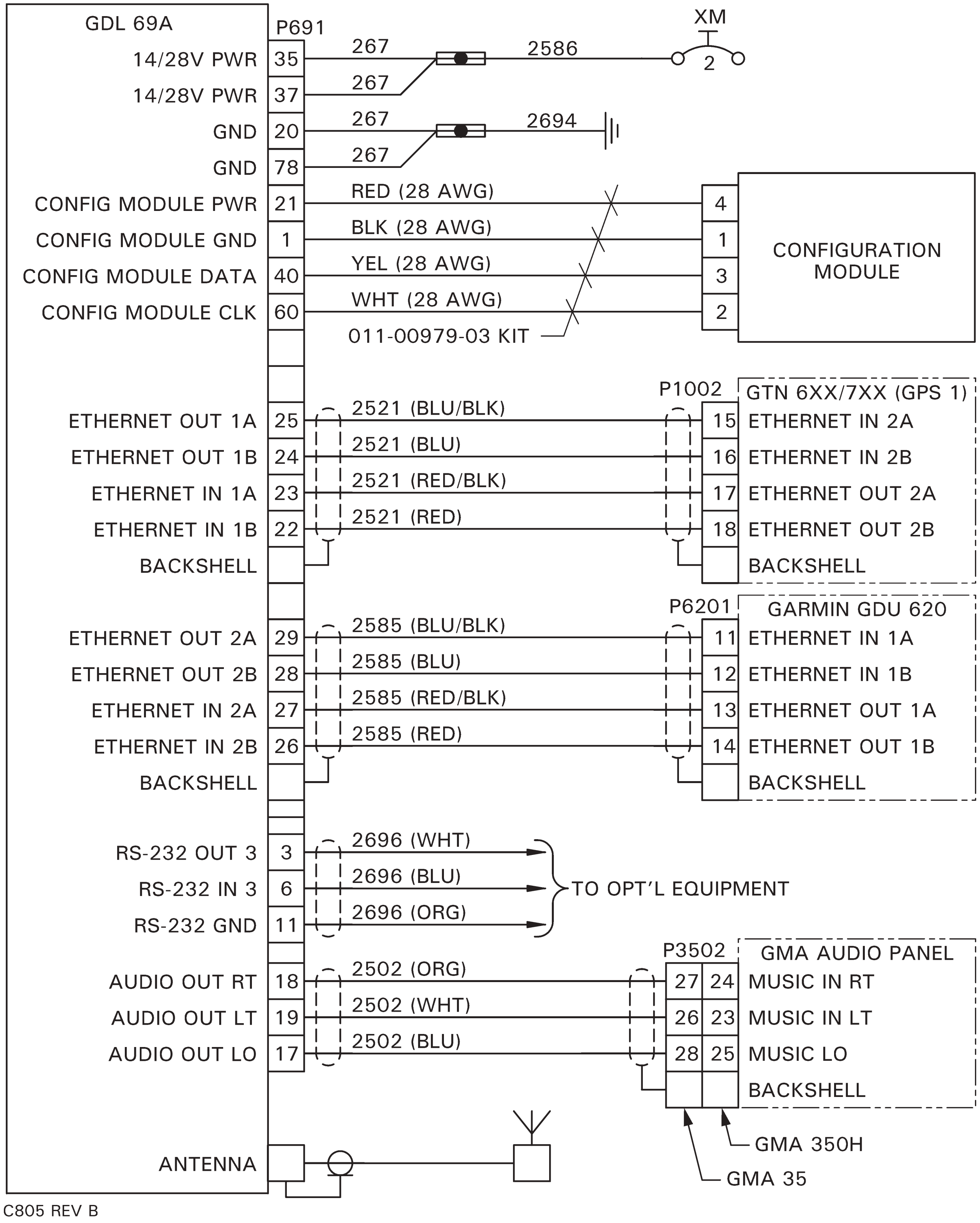

FIGURE 98-17 GARMIN GDL 69A XM RECEIVER INSTALLATION

Intentionally Blank

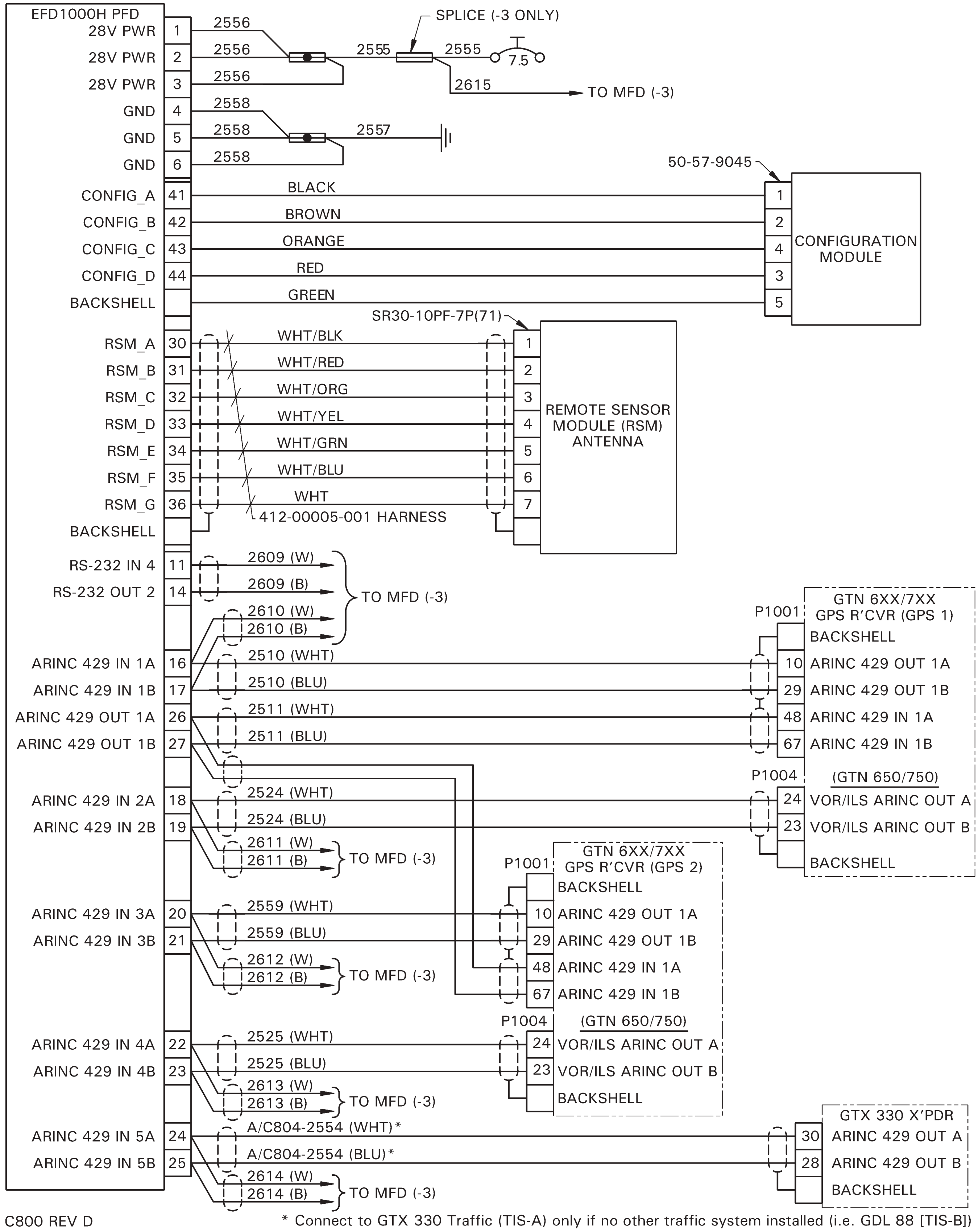

* Connect to GTX 330 Traffic (TIS-A) only if no other traffic system installed (i.e. GDL 88 [TIS-B])

FIGURE 98-18 ASPEN EFD1000H DISPLAY INSTALLATION

Intentionally Blank

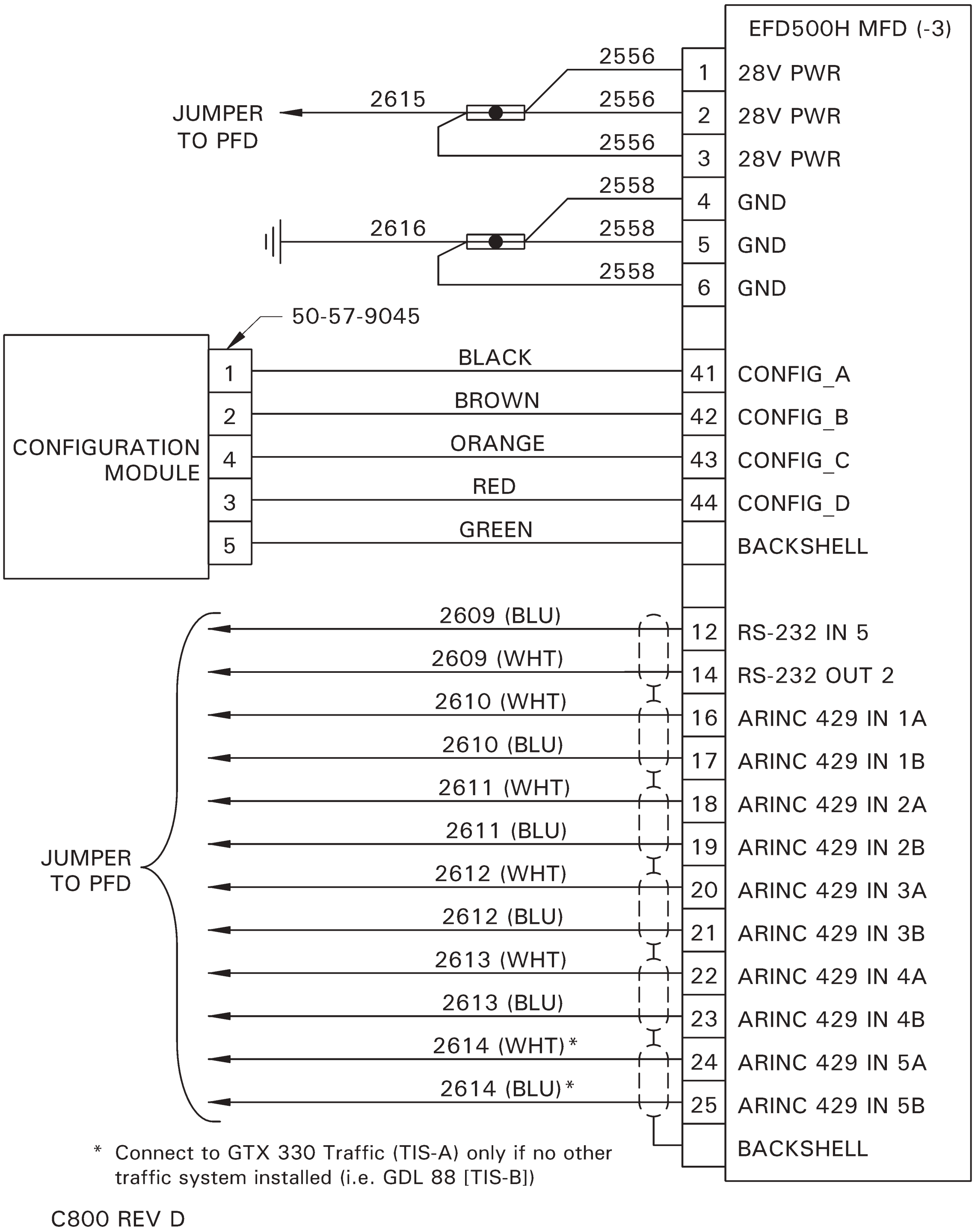

FIGURE 98-19 ASPEN EFD500H DISPLAY INSTALLATION

Intentionally Blank

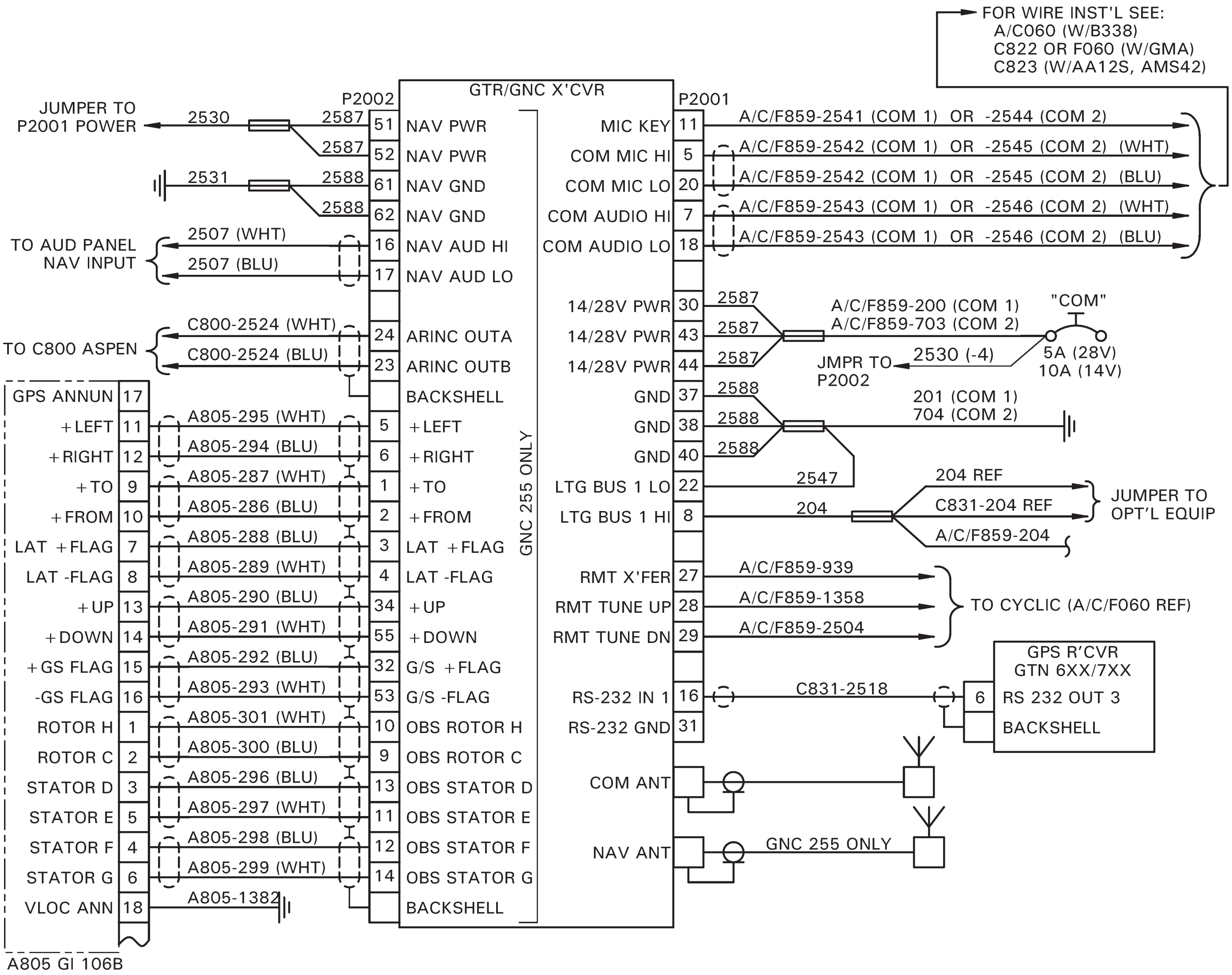

C802-2, & -4 REV E

FIGURE 98-20 GARMIN GTR 225B COM / GNC 255B NAV/COM RADIO INSTALLATION

Intentionally Blank

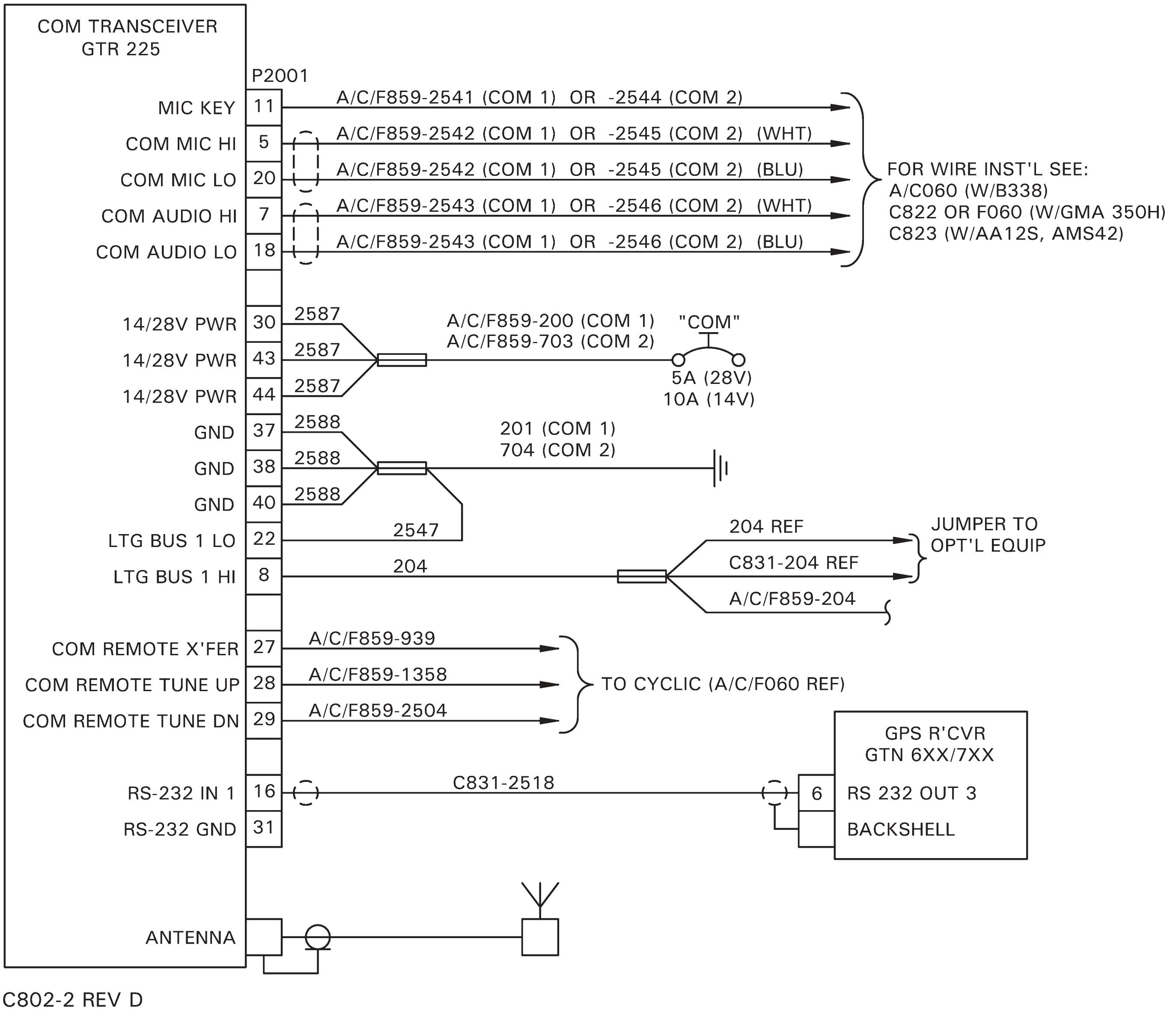

FIGURE 98-21 GARMIN GTR 225B COM RADIO INSTALLATION

Intentionally Blank

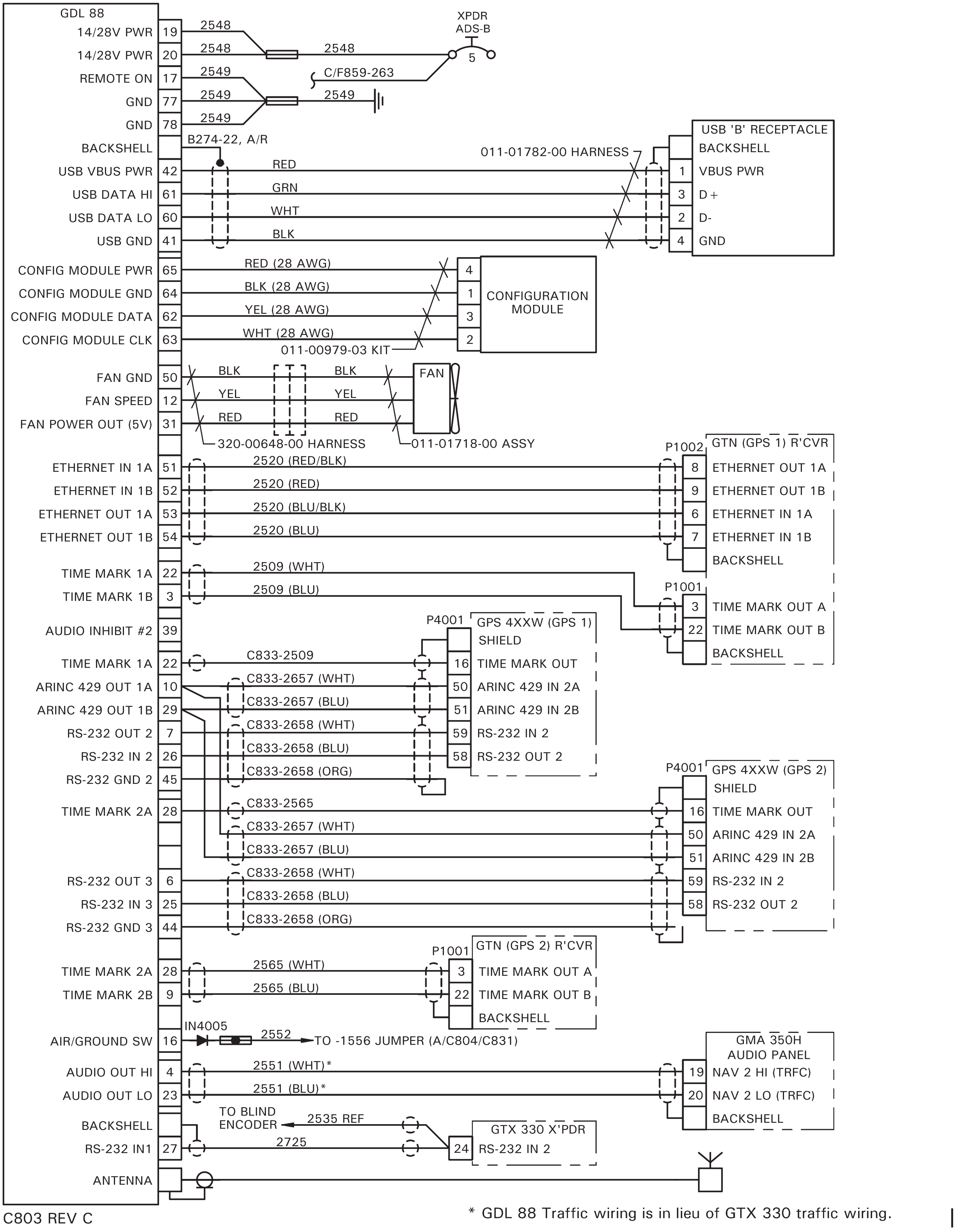

FIGURE 98-22 GARMIN GDL 88 ADS-B IN RECEIVER INSTALLATION

Intentionally Blank

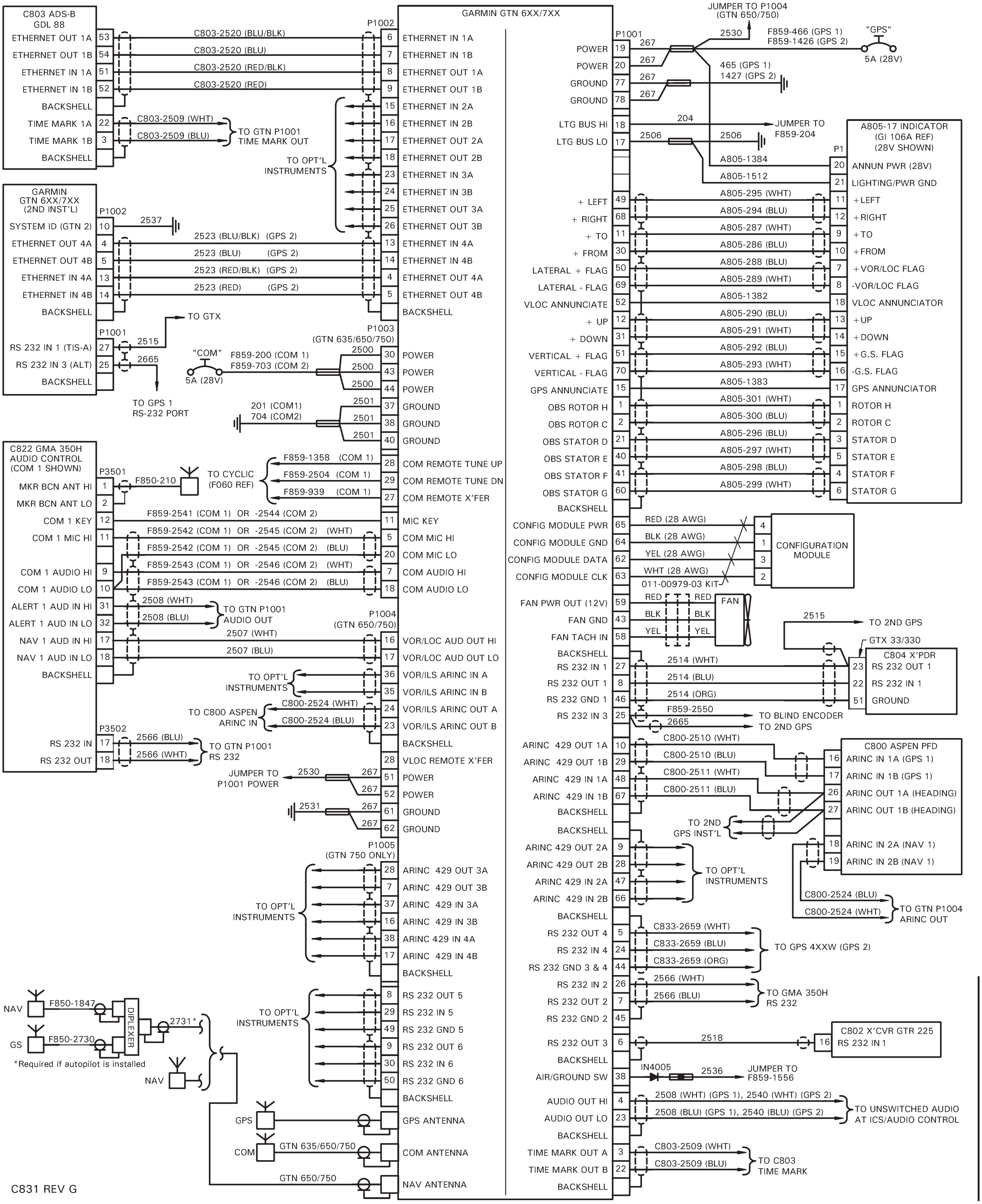

FIGURE 98-23 GARMIN GTN 6XX/7XX-SERIES GPS INSTALLATION (PILOT-SIDE CONSOLE)

Intentionally Blank

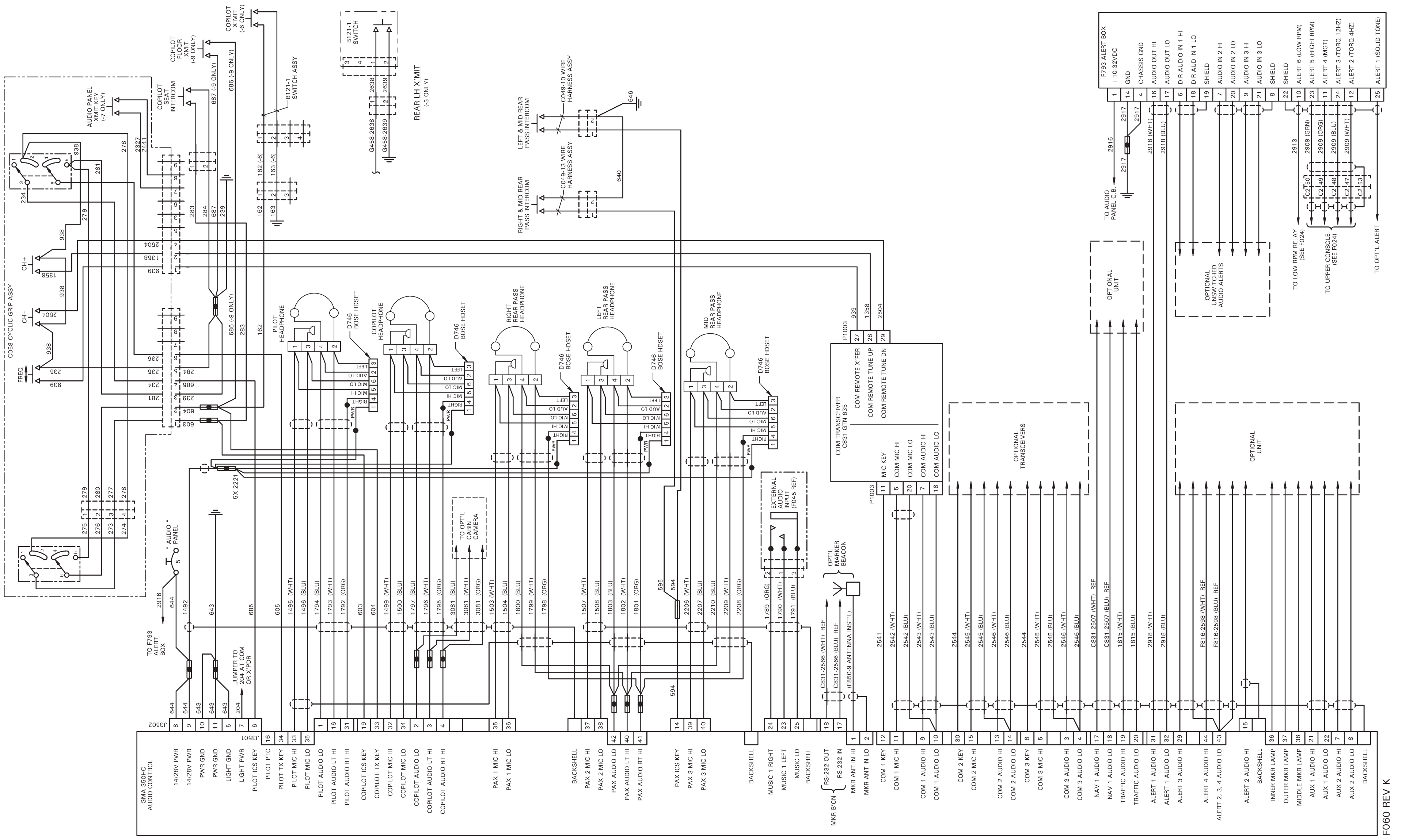

FIGURE 98-24 F060 INTERCOM SYSTEM INSTALLATION (GARMIN GMA 350HC AUDIO CONTROL)

Intentionally Blank

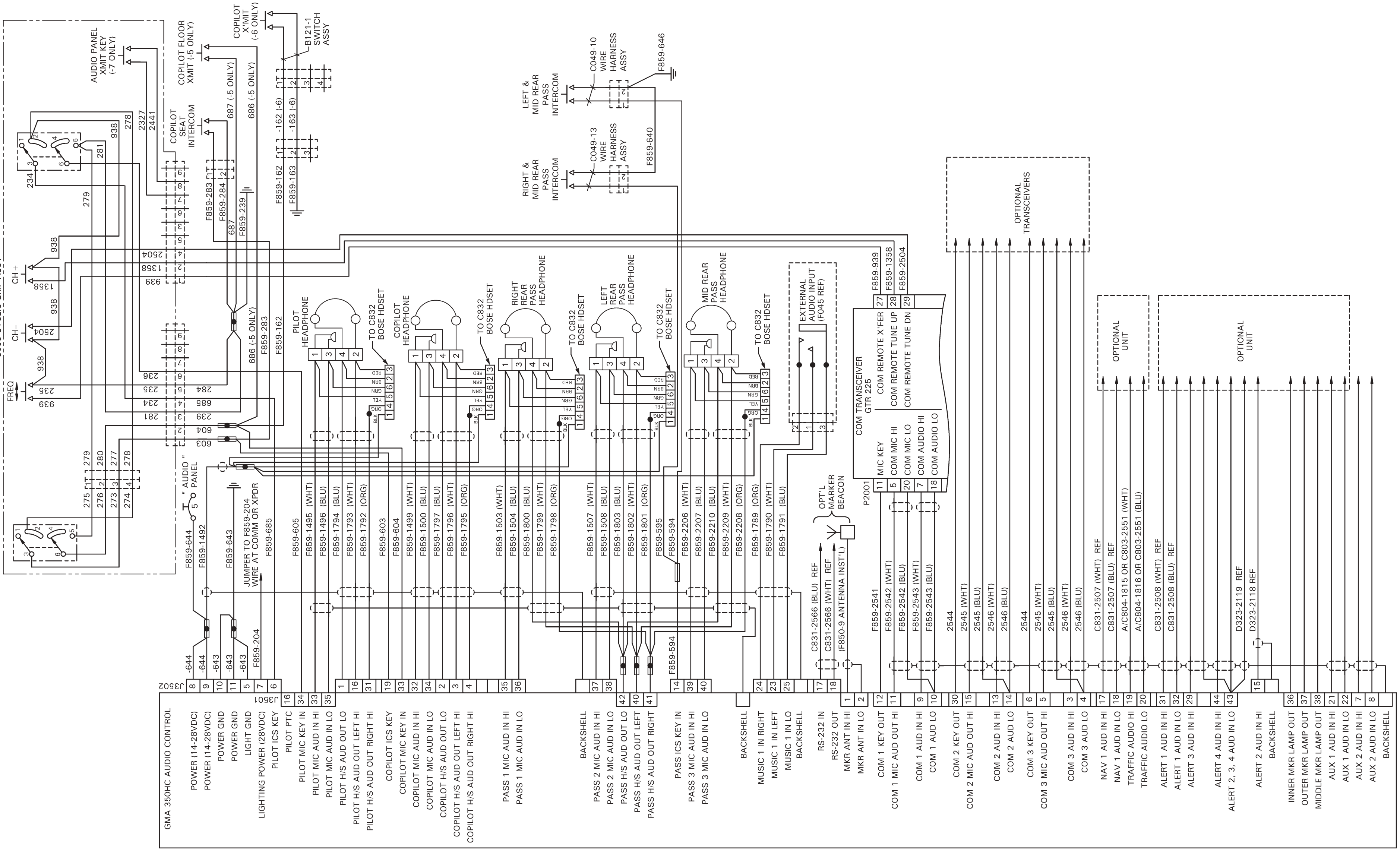

FIGURE 98-25A F060-4, -5, -6, & -7 INTERCOM SYSTEM INSTALLATION (GARMIN GMA 350HC AUDIO CONTROL)

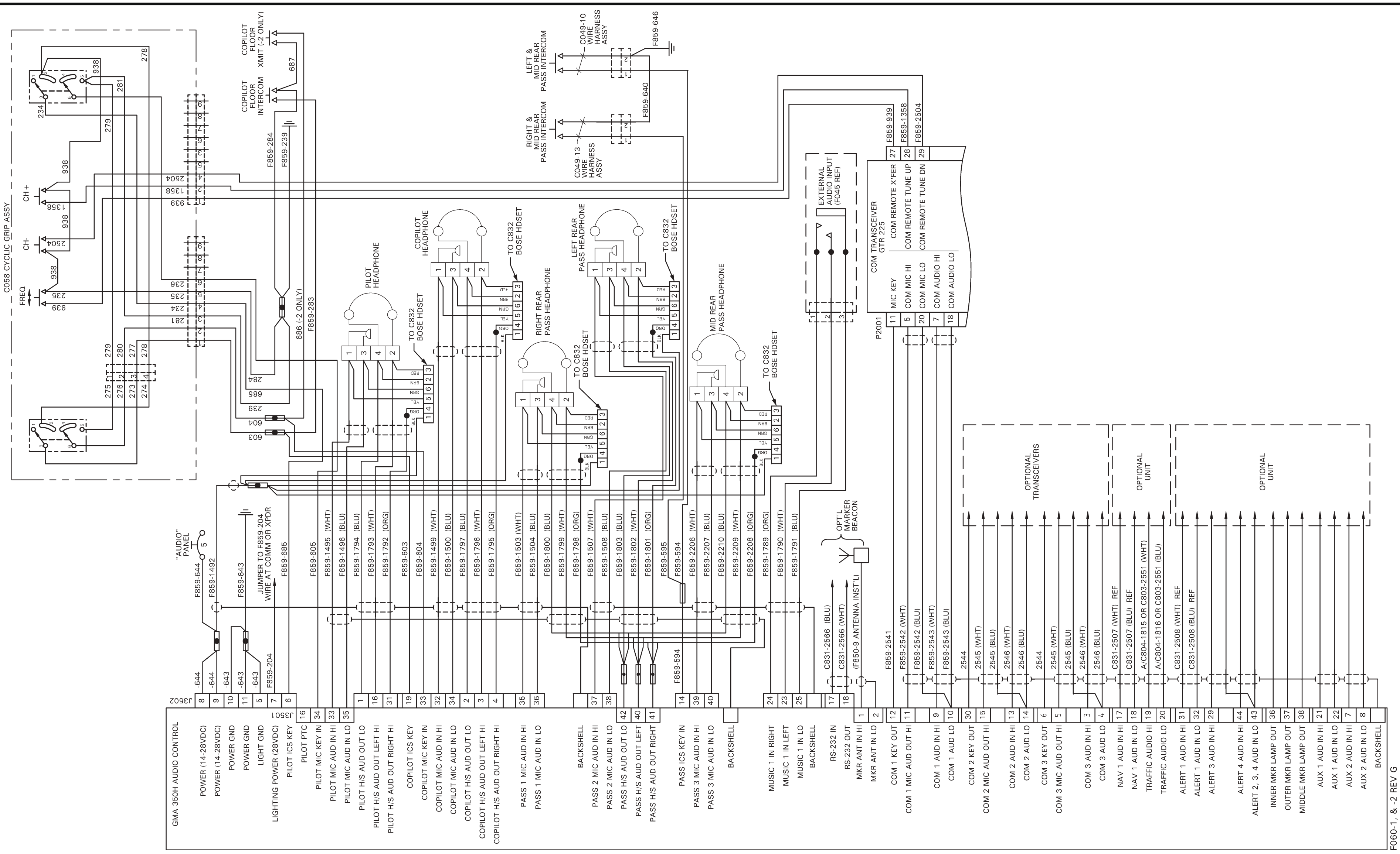

FIGURE 98-25B F060-1 & -2 INTERCOM SYSTEM INSTALLATION (GARMIN GMA 350H AUDIO CONTROL)

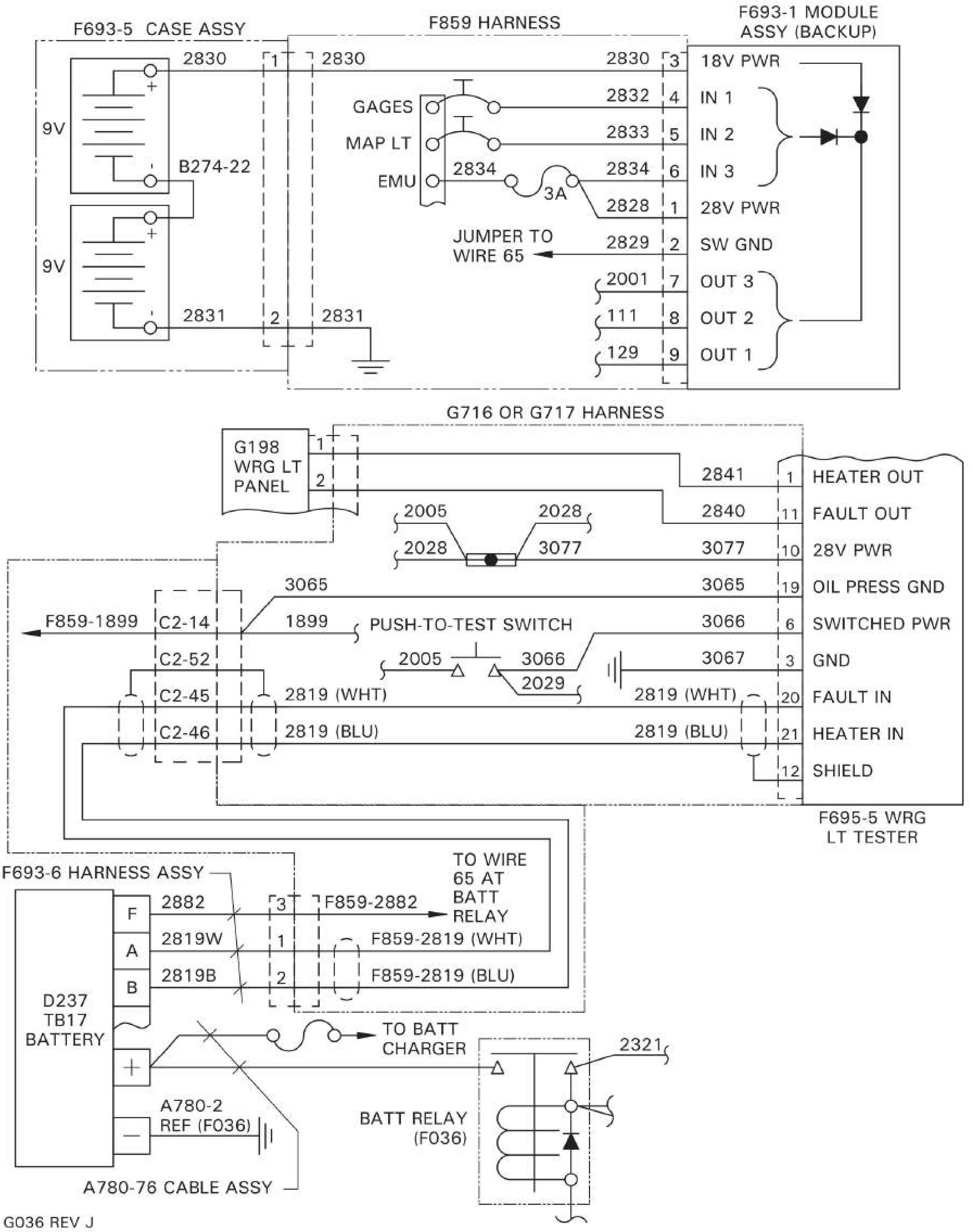

FIGURE 98-26 LITHIUM-ION BATTERY INSTALLATION
(Ships equipped with G198-7 warning light panel.)

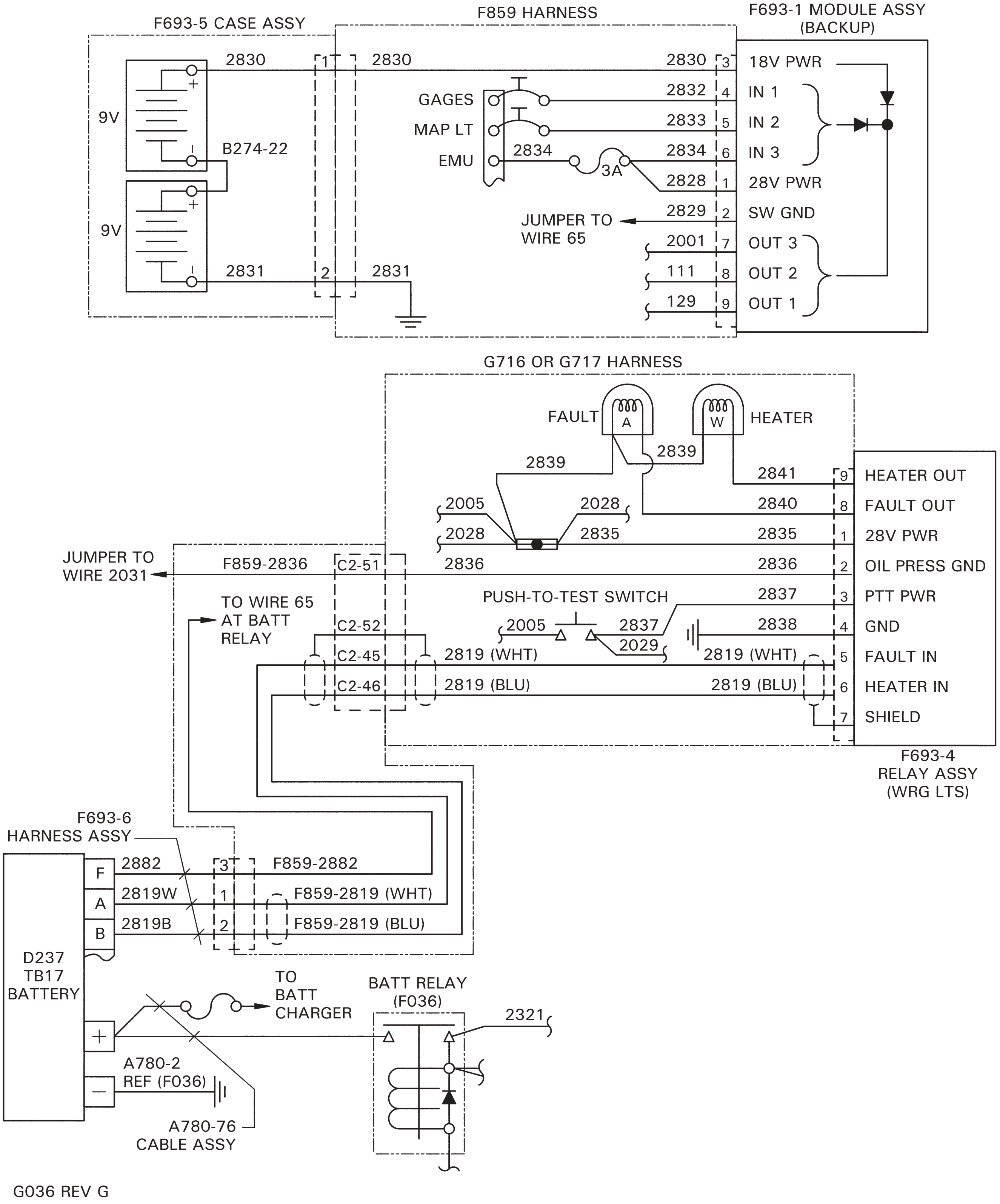

FIGURE 98-26A LITHIUM-ION BATTERY INSTALLATION
(Ships equipped with G198-1 warning light panel.)

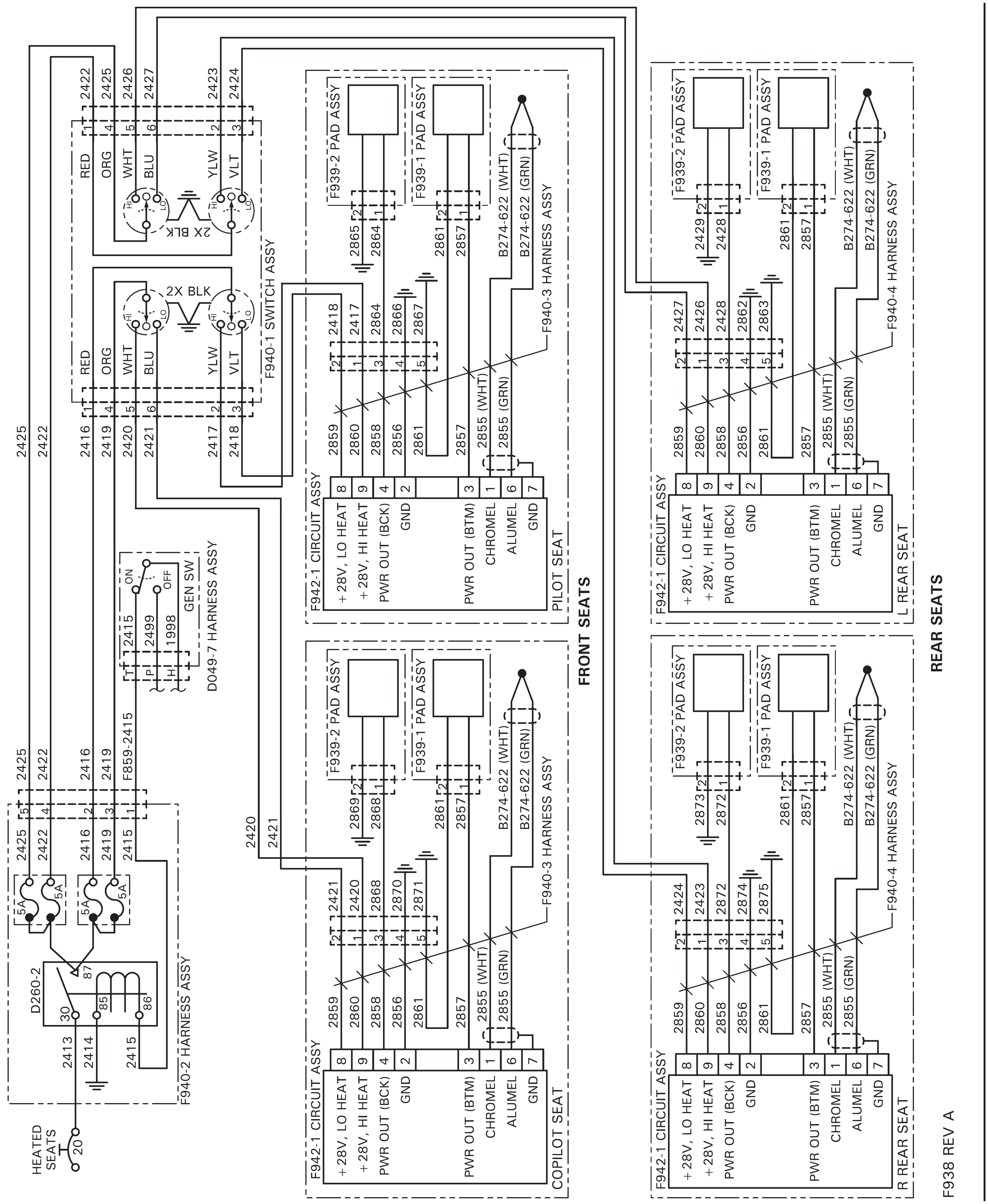

FIGURE 98-27 HEATED SEATS INSTALLATION

Intentionally Blank

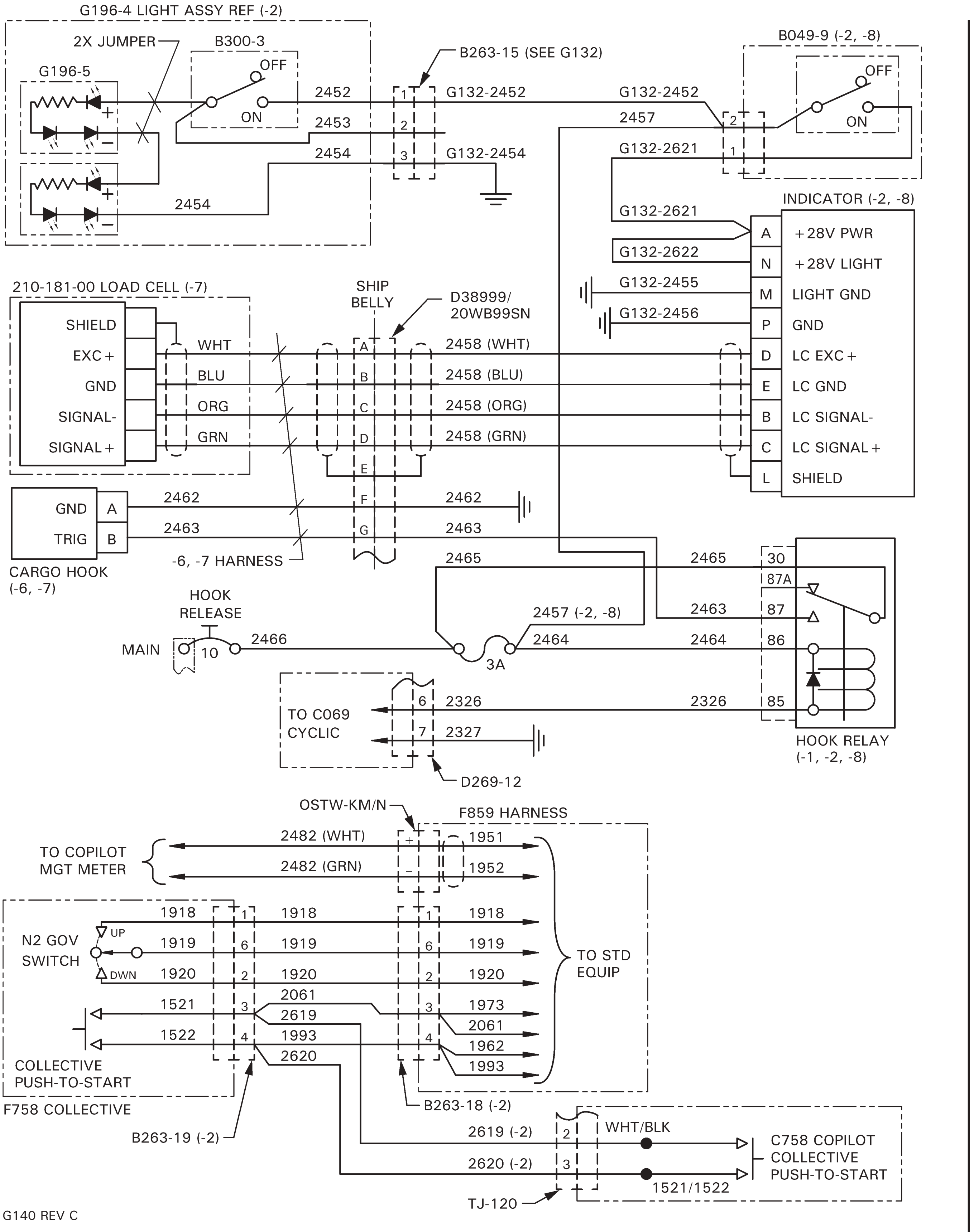

FIGURE 98-28 CARGO HOOK INSTALLATION

Intentionally Blank

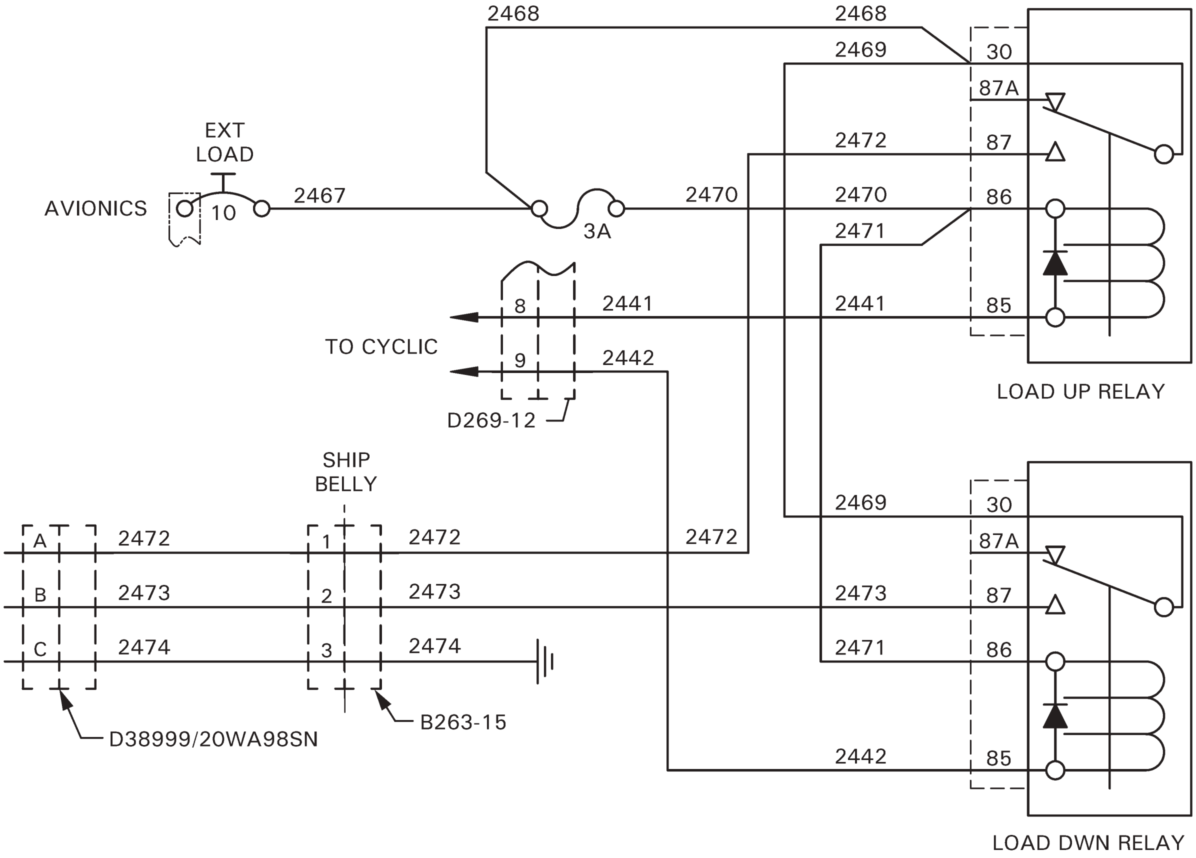

FIGURE 98-29 EXTERNAL LOAD CONTROLS

Intentionally Blank

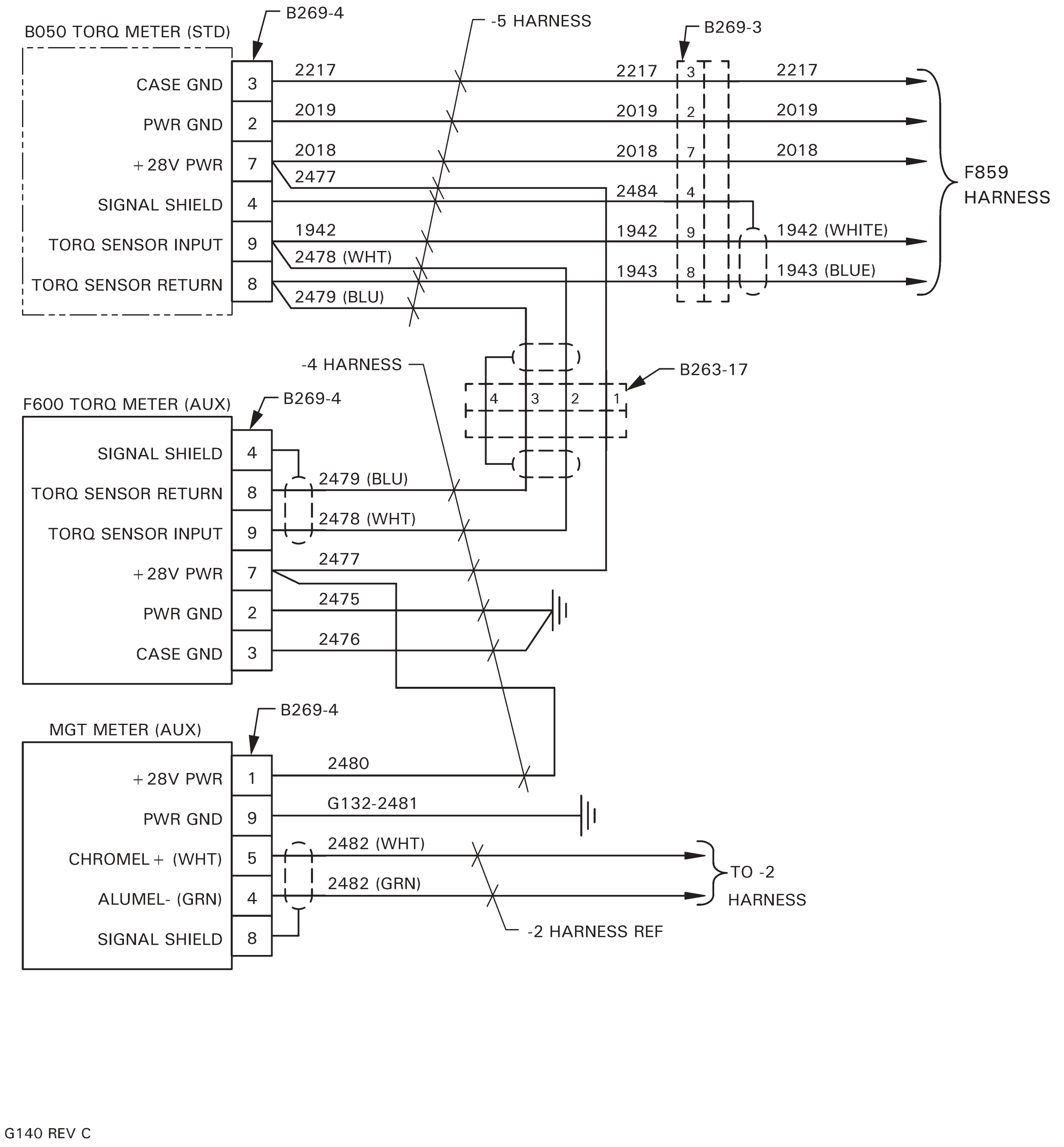

FIGURE 98-30 COPILOT INSTRUMENTS INSTALLATION

Intentionally Blank

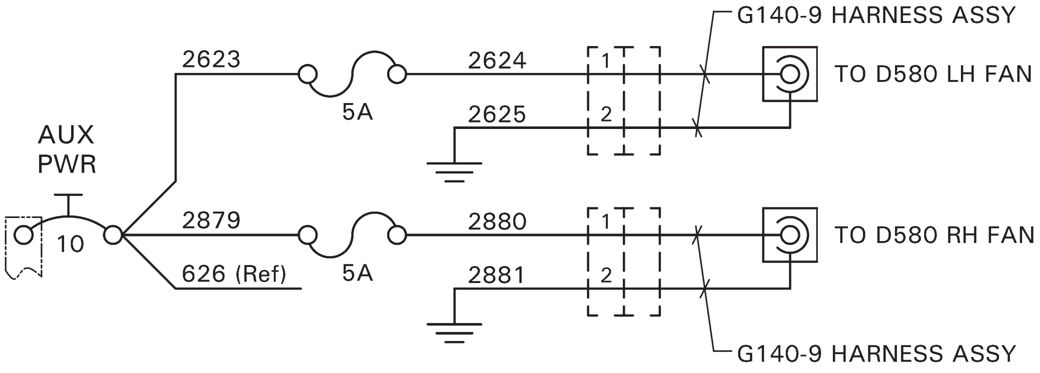

G140 REV C

FIGURE 98-31 BUBBLE DOOR FANS INSTALLATION

Intentionally Blank

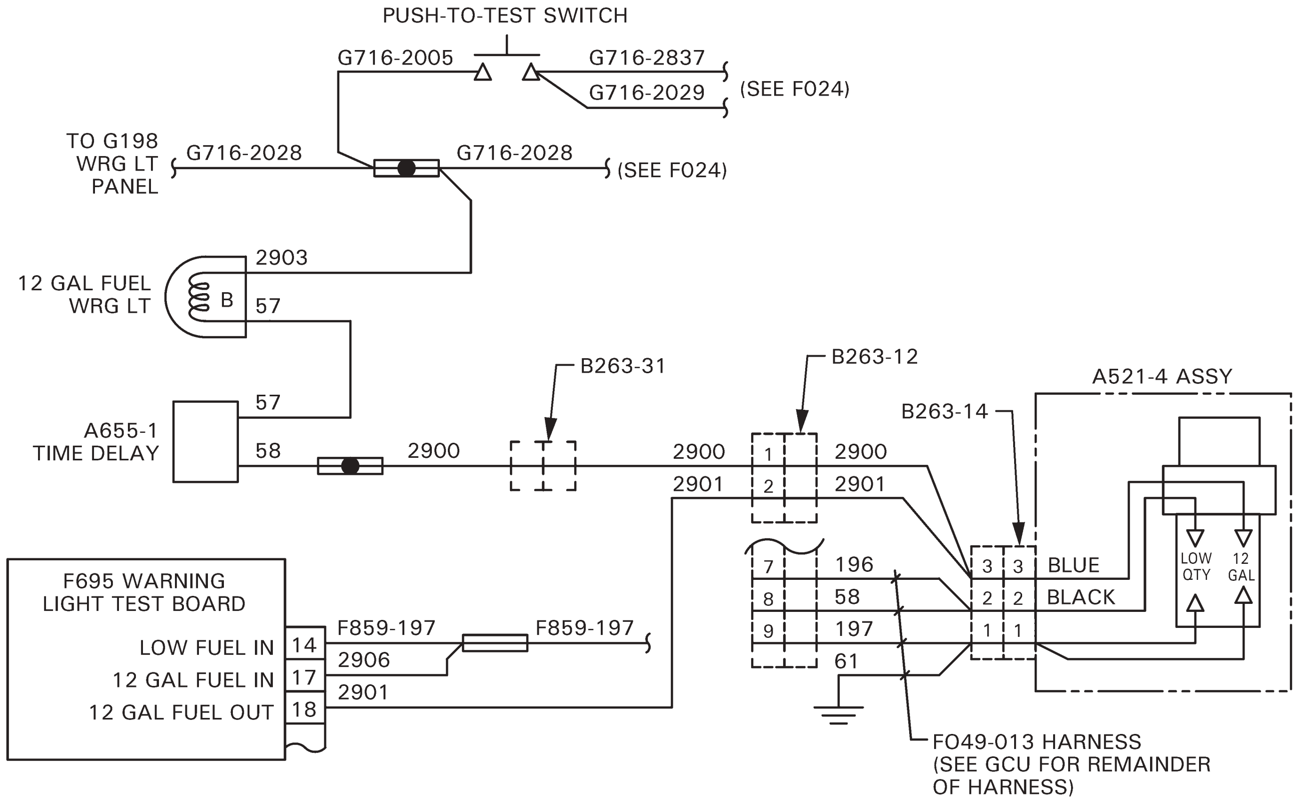

FIGURE 98-32 DUAL LOW FUEL WARNING LIGHT INSTALLATION

Intentionally Blank

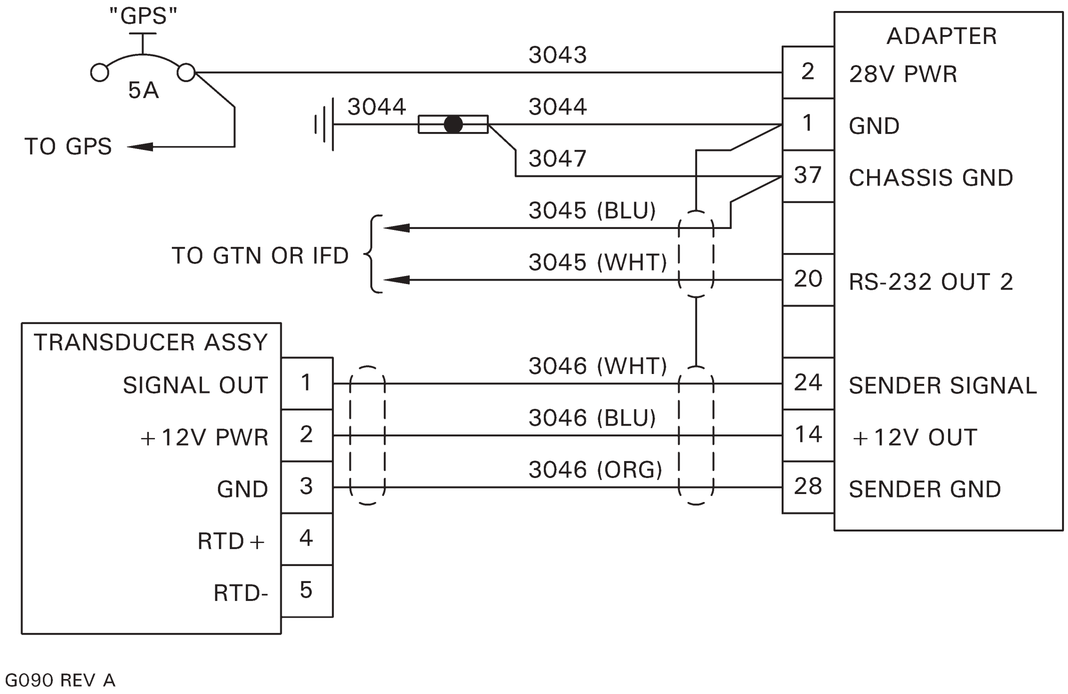

FIGURE 98-33 FUEL FLOW METER INSTALLATION

Intentionally Blank

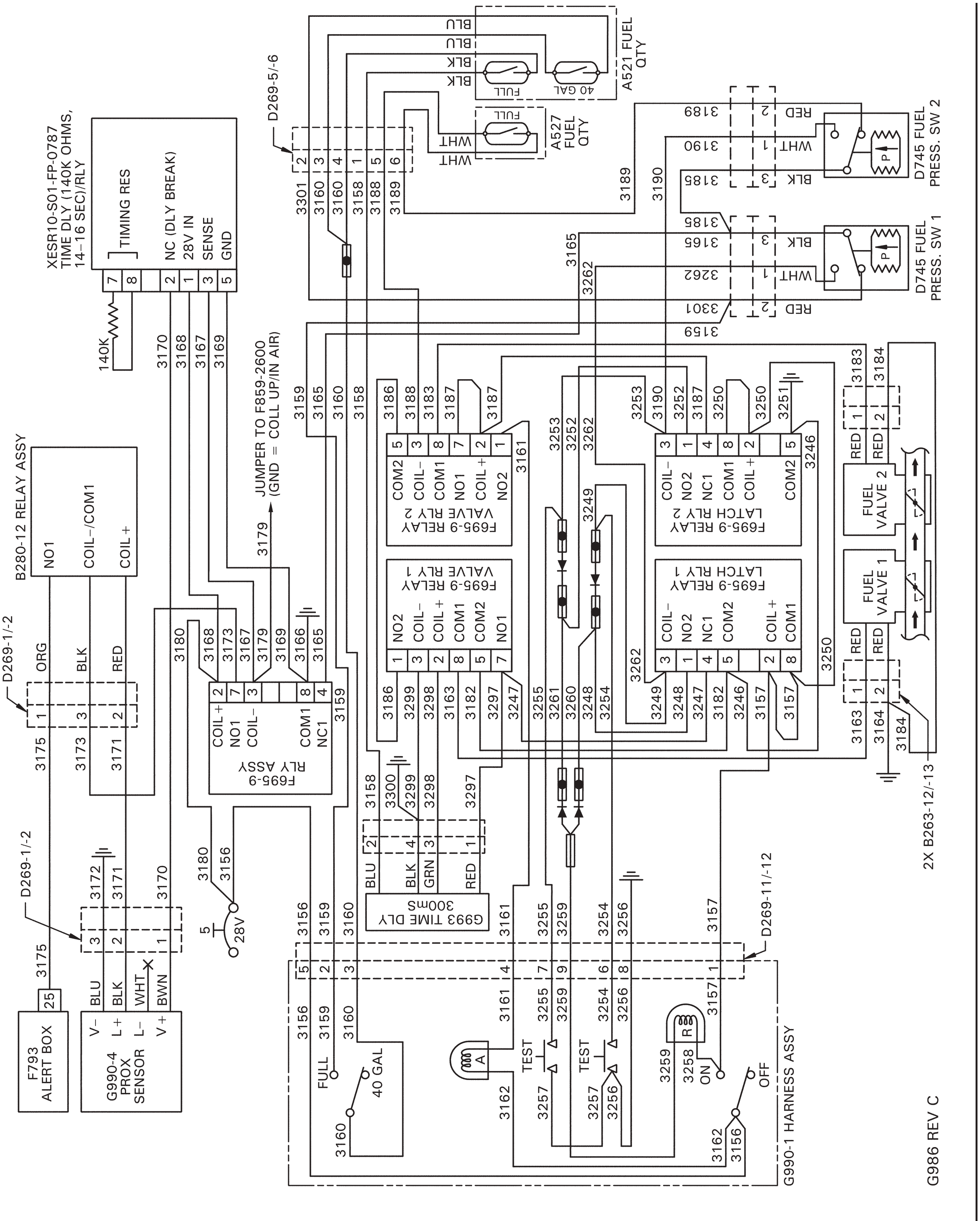

FIGURE 98-34 PRESSURE FUELING SYSTEM INSTALLATION (OPTIONAL)

Intentionally Blank

CHAPTER 99

SPECIAL TOOLS

Section	*Title*	*Page*
99-10	Special Tools	99.1
99-20	Illustrations and Tasks	99.2

Intentionally Blank

CHAPTER 99

SPECIAL TOOLS

99-10 Special Tools

The following is a list of Robinson R66 special tools.

R66 special tools are to be used in conjunction with the applicable instructions for continued airworthiness, for their designated maintenance task.

99-20 Illustrations and Tasks

Refer to Figure 99-1.

Item	Part Number	Description
1	MT054-1	Main Gearbox Drain Assembly
2	MT122-6	Micrometer Assembly – Main Rotor Hub, Bolt Stretch
3	MT146-4	Blocks – Swashplate Rigging (set of 2)
4	MT147-1	Bleed Tool – Main Rotor Blade Spindle [includes (2) MT147-2 fittings]
5	MT179-4	Balancing Bar – Tail Rotor Assembly Static Balance
6	MT260-6	Tail Rotor Drive Shaft Runout Attachments Kit
7	MT329-6	Plug – Main Rotor Hub Bearing Installation/Removal
8	MT329-10	Tube – Main Rotor Hub Bearing Removal

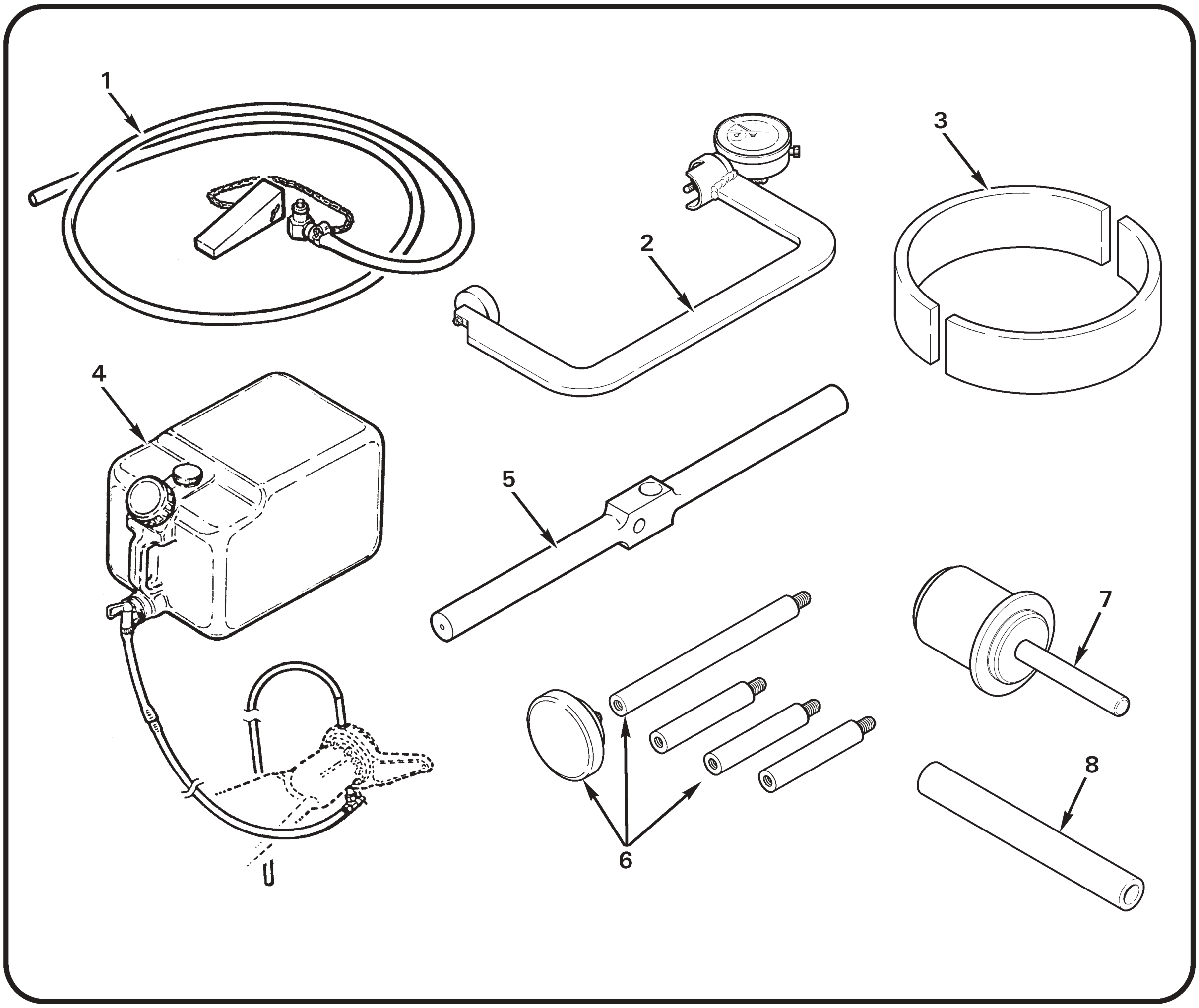

FIGURE 99-1 SPECIAL TOOLS

99-20 Illustrations and Tasks (continued)

Refer to Figure 99-2.

Item	Part Number	Description
1	MT352-1	Main Rotor Blade Trim Tab Gage
2	MT354-4 or -7	Teeter Moment Tool
3	MT357-2	0.375-inch diameter Reamer
4	MT357-3	0.156-inch diameter Cobalt Steel Drill
5	MT357-4	Hex Driver (Snap-On Part No. FABL8)
6	MT357-5	Torque Adapter (Snap-On Part No. FRDH101)
7	MT359-1	Spring Scale (0-30 lb)

* Ream bore after installation of A139-1 bearing to 0.376-0.375 inch diameter.

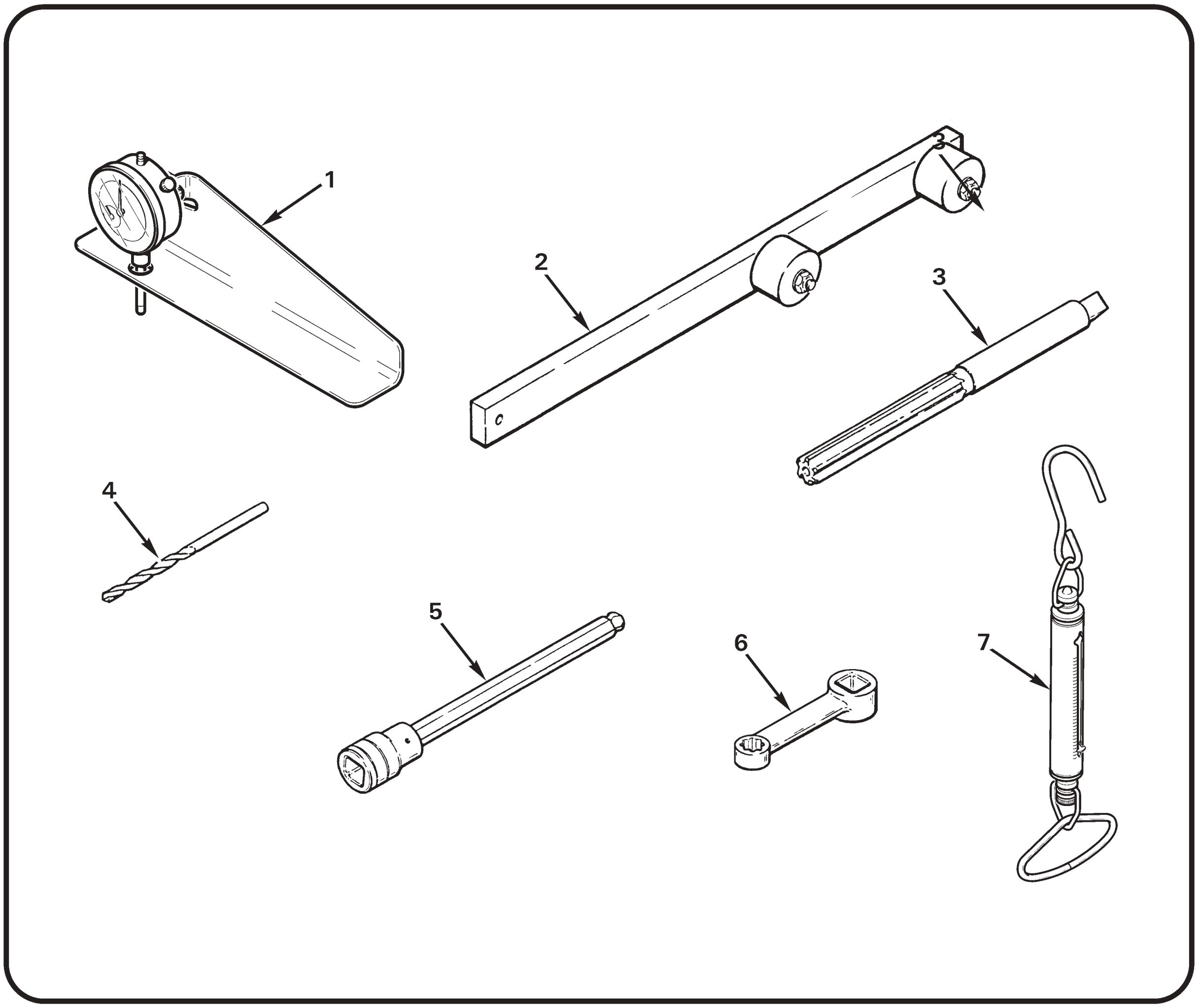

FIGURE 99-2 SPECIAL TOOLS

99-20 Illustrations and Tasks (continued)

Refer to Figure 99-3.

Item	Part Number	Description
1	MT384-1	Hydraulic Test Pump (U.S / Canada / Mexico – 110 V)
2	MT384-2	Hydraulic Test Pump (Outside North America – 220 V)
3	MT524-1	Main Rotor Static Balancing Fixture (Incl 4 and 5)
4	MT524-2	Balancing Fixture Components Without Base
5	MT009-9	Main Rotor Static Balancing Fixture Base

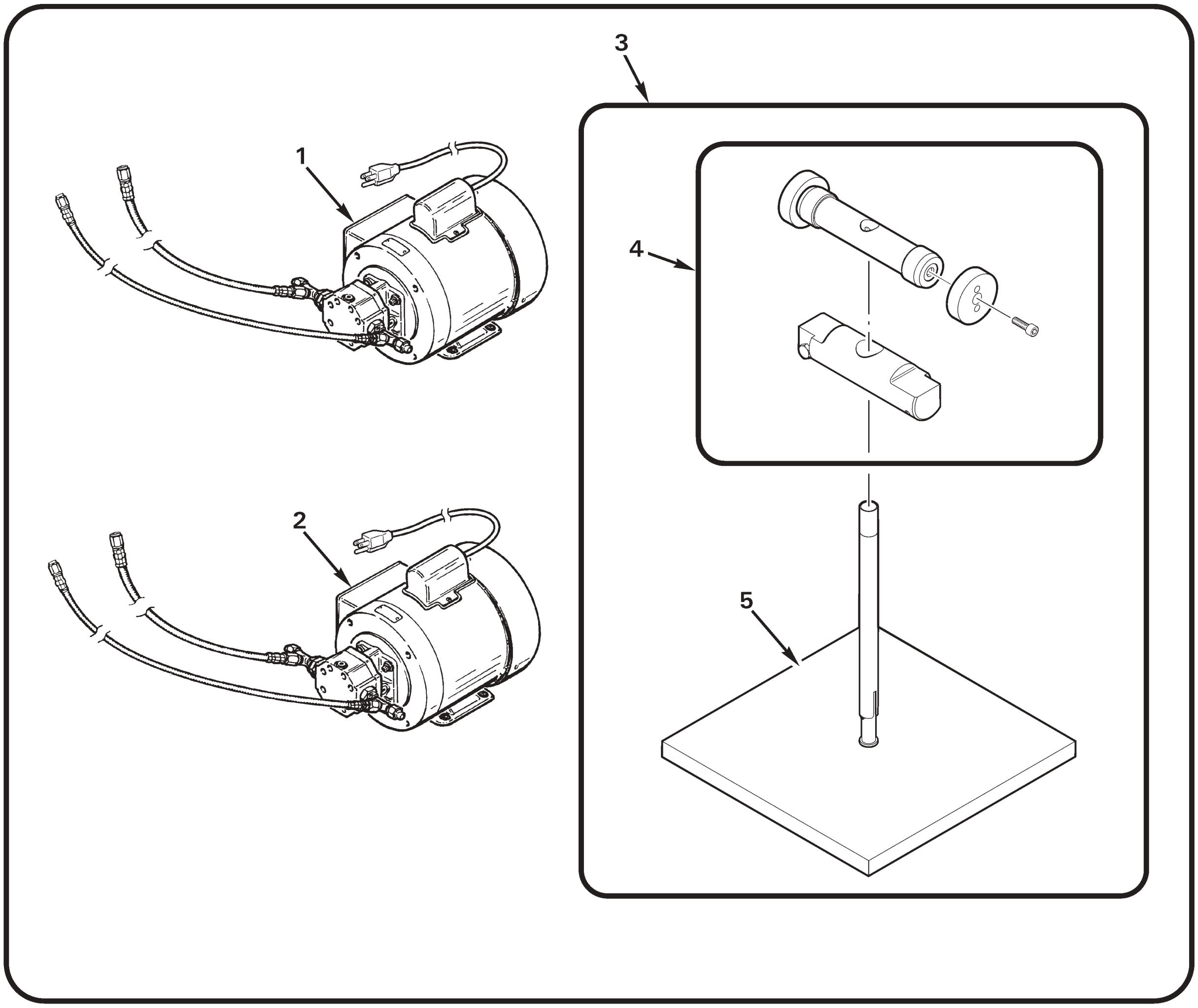

FIGURE 99-3 SPECIAL TOOLS

99-20 Illustrations and Tasks (continued)

Refer to Figure 99-4.

Item	Part Number	Description
1	MT525-7	Main Rotor Blade Rigging Fixture
2	MT525-9	Tail Rotor Blade Rigging Fixture
3	MT526-8	Bender Assembly – Trim Tab, Main Rotor Blade (aluminum)
4	MT527-1	Helicopter Lifting Fixture
5	MT548-8	Fitting (engine hoist adapter)

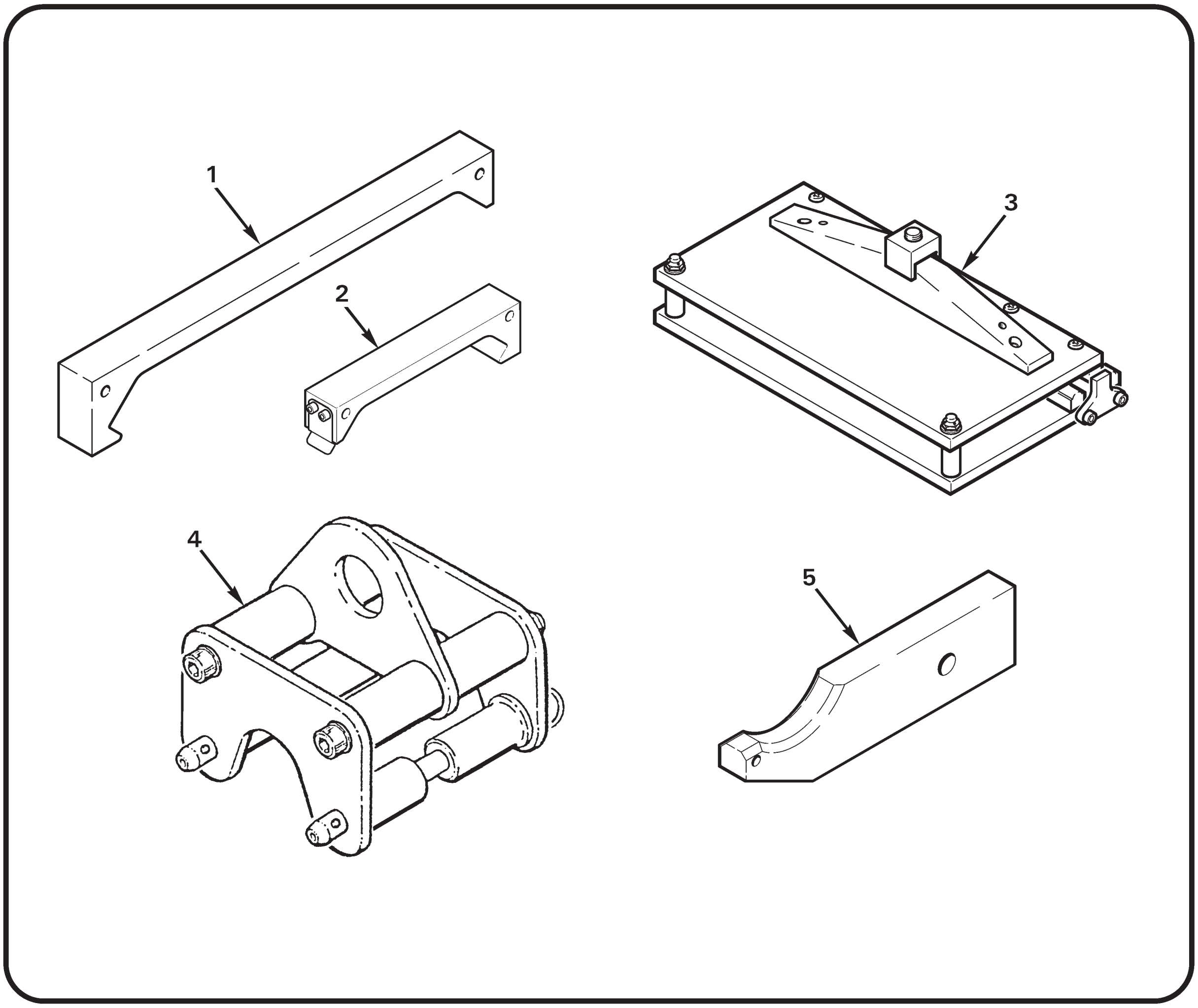

FIGURE 99-4 SPECIAL TOOLS

99-20 Illustrations and Tasks (continued)

Refer to Figure 99-5.

Item	Part Number	Description
1	MT549-1	Spacer – Spindle Boot (set of 2)
2	MT549-2	Plate – Spindle Boot
3	MT556-11	Kit Tools – Tail Rotor Hub Bearing Replacement
4	MT569-2	Guide Assembly – Drill (main rotor hub nut)
5	MT640-2	Open-End Crowfoot Wrench (N1 Plug)
6	MT643-1	Support Weldment – Main Rotor Hub Bearing Installation
7	MT759-1	Blocks – Cyclic Rigging (see Figure 18-7A)
	MT759-2	Blocks – Cyclic Rigging (see Figure 18-7A)

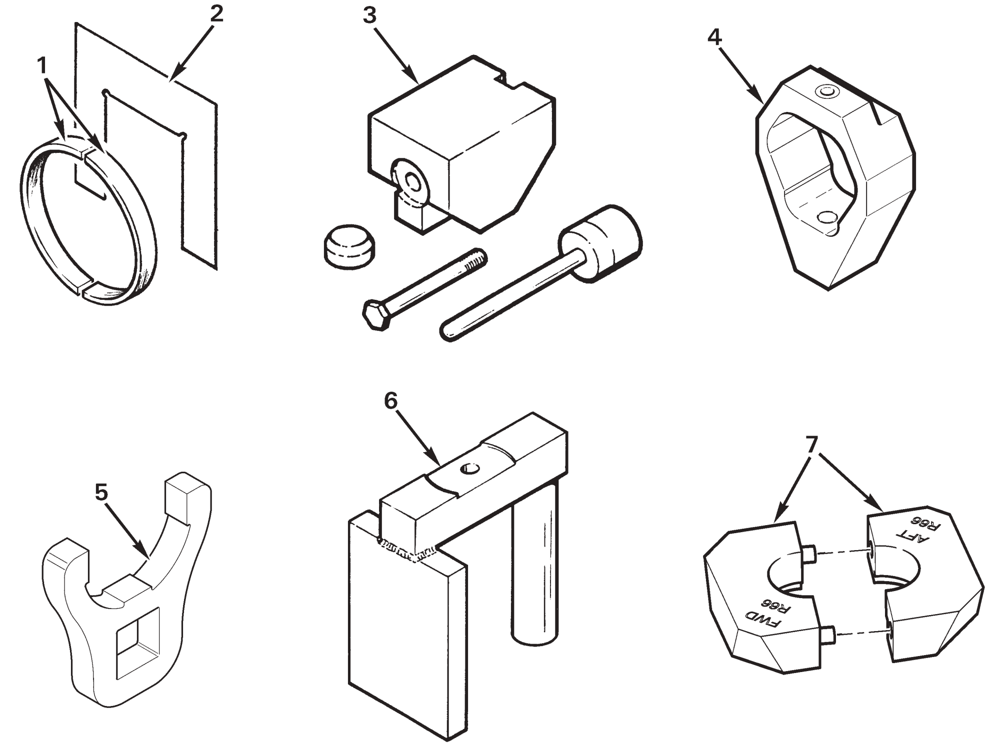

FIGURE 99-5 SPECIAL TOOLS

99-20 Illustrations and Tasks (continued)

Refer to Figure 99-6.

Item	Part Number	Description
1	MT850-1	Engine Stand Assembly (RR300)
2	AN970-4*	Washer – Tap Test Tool
3	MT990-1 MT990-2	Charger Assembly (BatteryMinder – 24 VDC, 120 VAC, 50/60 Hz) Charger Assembly (BatteryMinder – 24 VDC, 240 VAC, 50/60 Hz)
4	2020HR	ACES Probalancer Analyzer (or equivalent dynamic balancer)

* Or 1965 or later U.S. quarter dollar coin in good condition.

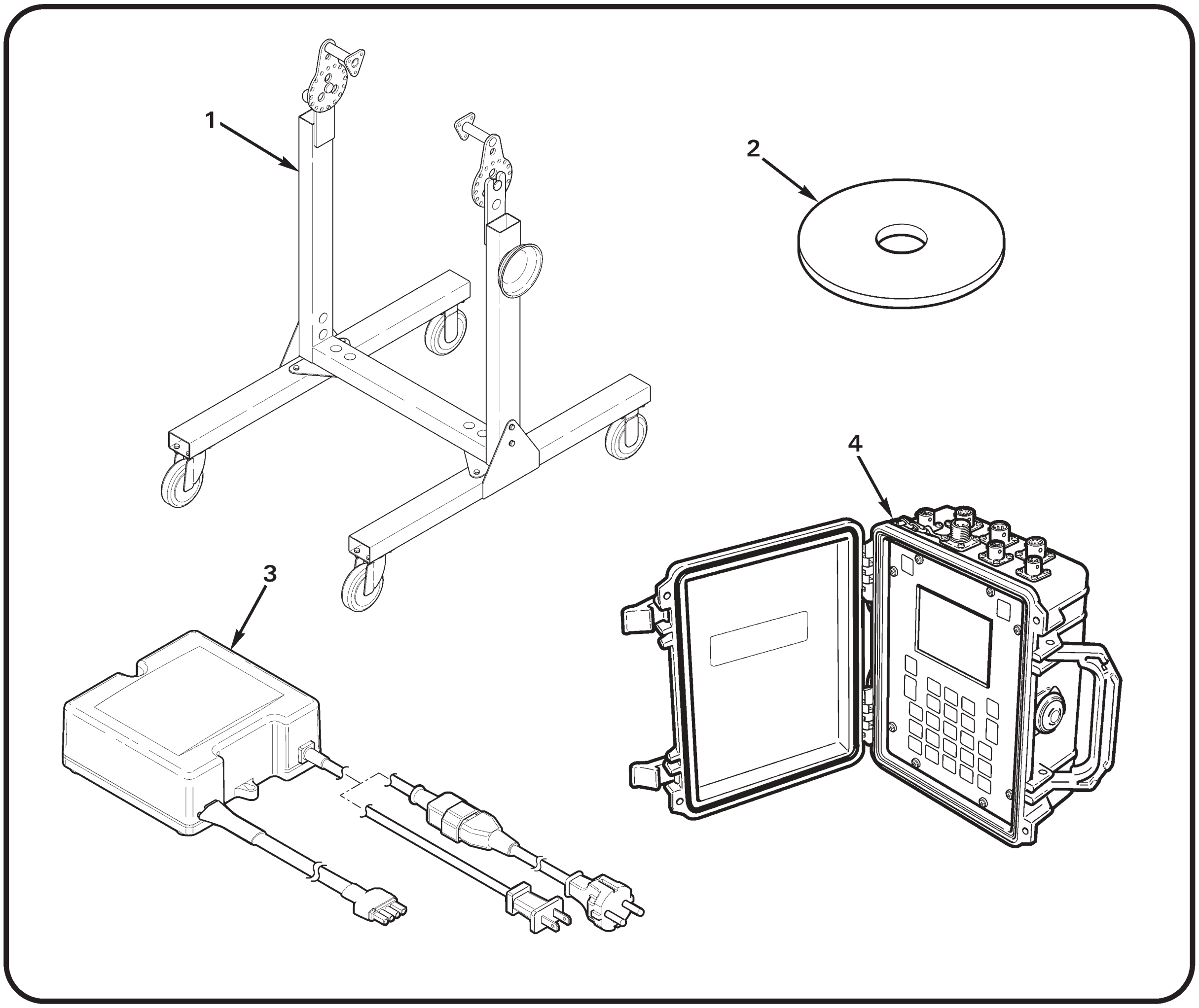

FIGURE 99-6 SPECIAL TOOLS

99-20 Illustrations and Tasks (continued)

Refer to Figure 99-7.

Item	Part Number	Description*
1	R6683	Tow Cart Crate (31 in. x 38 in. x 66.50 in.)
2	R5387	Windshield Box (21.75 in. x 40 in. x 66 in.; cardboard. Holds up to four windshields.)
3	R5352	Main Rotor Blade Crate (21.75 in. x 17 in. x 206.50 in.)
4	R5385	Push-Pull Tube/Tail Rotor Drive Shaft Crate (10.25 in. x 11.50 in. x 192 in.)

* Dimensions are approximate and expressed in inches. Dimensions are provided in height x width x length.

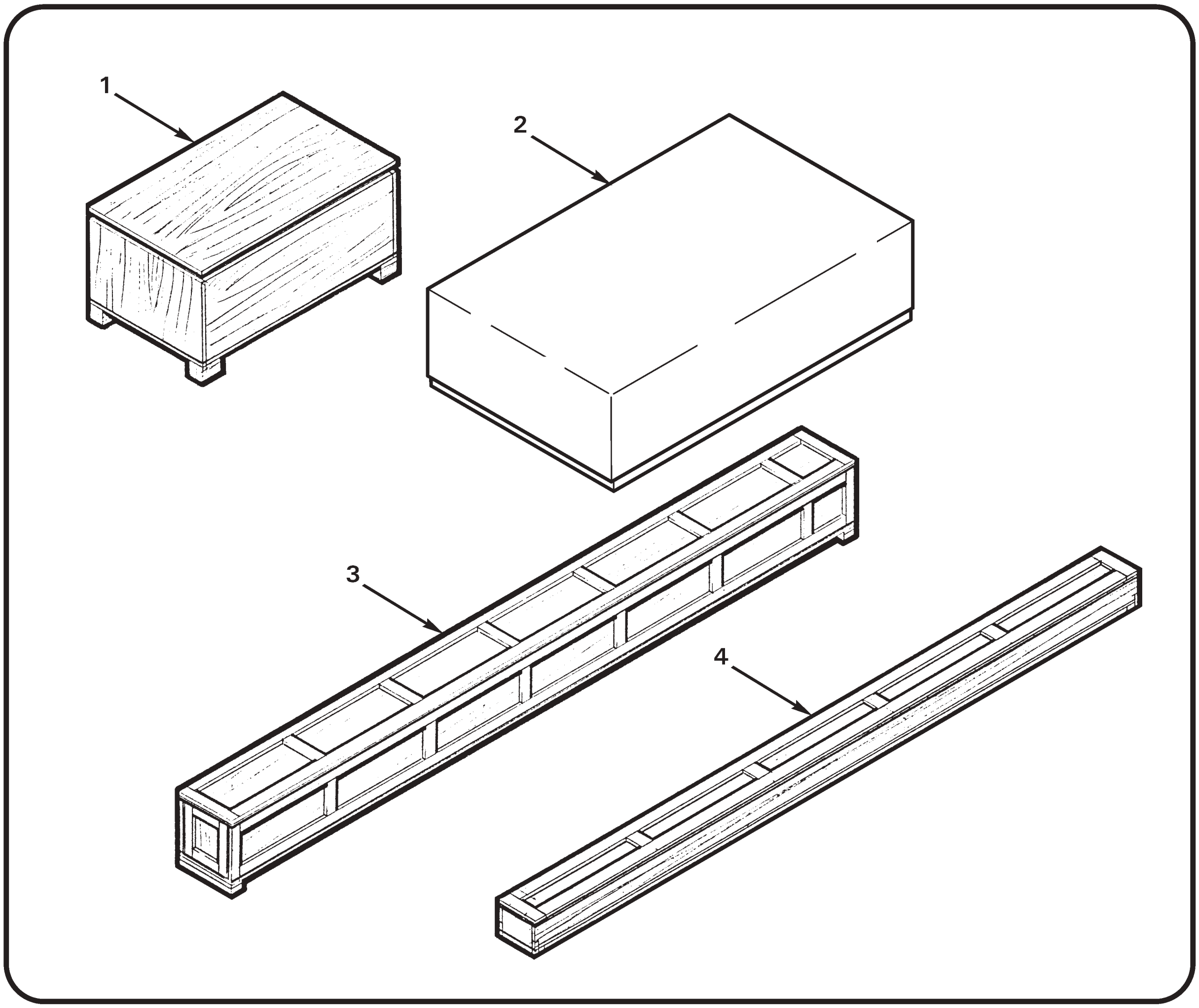

FIGURE 99-7 SHIPPING CRATES

99-20 Illustrations and Tasks (continued)

Refer to Figure 99-8.

Item	Part Number	Description*
1	R5386	Cabin Door Crate (23.75 in. x 34 in. x 60 in.; holds [1] bubble or [2] regular doors)
2	R5388	Tailcone Crate (27.25 in. x 24 in. x 192 in.)
3	R5702	Main Rotor Blade/Tailcone Crate (28 in. x 30 in. x 208 in.)
4	R7982	Main Rotor Gearbox Crate (27 in. x 28.75 in. x 89.50 in.)

* Dimensions are approximate and expressed in inches. Dimensions are provided in height x width x length.

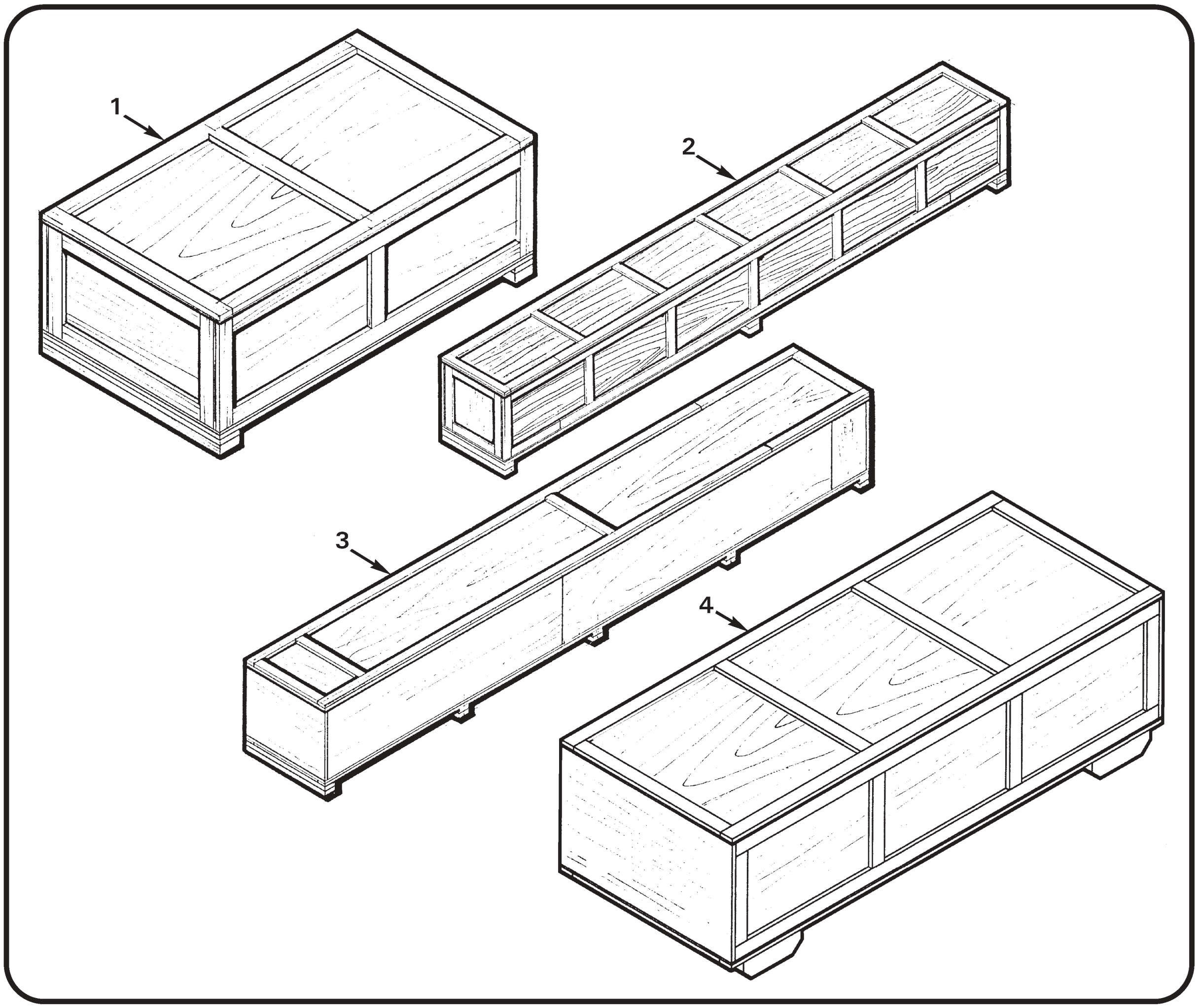

FIGURE 99-8 SHIPPING CRATES

Intentionally Blank

CHAPTER 100

REVISION LOG

Section	*Title*	*Page*
—	Revision Log	100.1

Intentionally Blank

REVISION LOG

SEP 2024

The R66 Maintenance Manual (MM) list of effective pages and effective dates are given below. If a previously issued page is not listed below, it is no longer an effective page and must be discarded. The issue or revision date is in bold at the top of each revision log page.

Please visit https://robinsonheli.com to verify the issue or revision date is current.

Page	Date	Page	Date	Page	Date
i	SEP 2024	4.2	JUL 2023	5.21A	JUL 2023
ii	SEP 2024	4.3	SEP 2024	5.21B	MAY 2021
iii	JUL 2020	4.4	SEP 2024	5.21C	MAY 2021
iv	JUL 2020			5.21D	JUL 2023
v	APR 2017	5.i	JUL 2020	5.22	JUL 2023
vi	APR 2017	5.ii	JUL 2020	5.23	MAY 2021
		5.1	JUL 2020	5.24	MAY 2021
1.i	JUL 2023	5.2	JUL 2020	5.25	APR 2019
1.ii	JUL 2023	5.3	JUL 2023	5.26	APR 2019
1.1	APR 2019	5.4	JUL 2023	5.27	JUL 2023
1.2	APR 2019	5.5	MAY 2021	5.28	JUL 2023
1.3	JUL 2023	5.6	MAY 2021	5.28A	JUL 2023
1.4	JUL 2023	5.7	JUL 2020	5.28B	JUL 2023
1.4A	JUL 2023	5.8	JUL 2020	5.29	SEP 2023
1.4B	JUL 2023	5.9	JUL 2020	5.30	SEP 2023
1.5	SEP 2012	5.9A	JUL 2020	5.31	JUL 2023
1.6	SEP 2012	5.9B	JUL 2020	5.32	JUL 2023
1.7	SEP 2023	5.10	JUL 2020	5.33	JUL 2023
1.8	SEP 2023	5.11	NOV 2023	5.34	JUL 2023
1.9	NOV 2023	5.12	NOV 2023	5.34A	MAY 2021
1.10	NOV 2023	5.13	JUL 2023	5.34B	MAY 2021
1.11	JUL 2020	5.14	JUL 2023	5.35	JUL 2023
1.12	JUL 2020	5.15	MAY 2021	5.36	JUL 2023
1.13	JUL 2020	5.16	MAY 2021	5.37	MAY 2021
1.14	JUL 2020	5.16A	JUL 2023	5.38	MAY 2021
1.15	JUL 2020	5.16B	JUL 2023	5.38A	MAY 2021
1.16	JUL 2020	5.17	JUL 2023	5.38B	MAY 2021
1.17	JUL 2020	5.18	JUL 2023	5.39	JUL 2023
1.18	JUL 2020	5.19	JUL 2020	5.39A	JUL 2023
		5.20	JUL 2020	5.39B	JUL 2020
4.i	SEP 2023	5.20A	JUL 2023	5.39C	JUL 2020
4.ii	SEP 2023	5.20B	JUL 2023	5.39D	JUL 2020
4.1	JUL 2023	5.21	JUL 2023	5.40	JUL 2020

REVISION LOG

SEP 2024

Page	*Date*
5.41	SEP 2023
5.42	SEP 2023
5.43	MAY 2015
5.44	MAY 2015
5.45	APR 2019
5.46	APR 2019
5.47	APR 2019
5.47A	APR 2019
5.47B	APR 2017
5.48	APR 2017
5.49	MAY 2021
5.50	MAY 2021
5.51	NOV 2023
5.52	NOV 2023
6.i	SEP 2023
6.ii	SEP 2023
6.1	SEP 2023
6.2	SEP 2023
6.3	SEP 2023
6.4	SEP 2023
6.5	25 OCT 2010
6.6	25 OCT 2010
6.7	SEP 2023
6.8	SEP 2023
6.9	SEP 2023
6.10	SEP 2023
6.11	SEP 2023
6.12	SEP 2023
7.i	25 OCT 2010
7.ii	25 OCT 2010
7.1	SEP 2012
7.2	SEP 2012
7.3	SEP 2012
7.4	SEP 2012
7.5	25 OCT 2010
7.6	25 OCT 2010
8.i	SEP 2023
8.ii	SEP 2023
8.1	SEP 2012
8.2	SEP 2012
8.3	SEP 2012
8.4	SEP 2012
8.5	25 OCT 2010
8.6	25 OCT 2010
8.7	SEP 2012
8.8	SEP 2012
8.9	25 OCT 2010
8.10	25 OCT 2010
8.11	SEP 2023
8.12	SEP 2023
8.13	NOV 2023
8.14	NOV 2023
9.i	25 OCT 2010
9.ii	25 OCT 2010
9.1	25 OCT 2010
9.2	25 OCT 2010
9.3	SEP 2012
9.4	SEP 2012
10.i	25 OCT 2010
10.ii	25 OCT 2010
10.1	SEP 2023
10.2	SEP 2023
10.3	SEP 2023
10.4	SEP 2023
10.5	25 OCT 2010
10.6	25 OCT 2010
11.i	APR 2017
11.ii	APR 2017
11.1	MAY 2021
11.2	MAY 2021
12.i	JUL 2020
12.ii	JUL 2020
12.1	SEP 2012
12.2	SEP 2012
12.3	APR 2019
12.4	APR 2019
12.5	SEP 2012
12.6	SEP 2012
12.7	SEP 2012
12.8	SEP 2012
12.9	MAY 2021
12.10	MAY 2021
12.11	SEP 2012
12.12	SEP 2012
12.13	JUL 2023
12.13A	JUL 2023
12.13B	APR 2017
12.14	APR 2017
12.15	JUL 2023
12.16	JUL 2023
12.17	JUL 2020
12.17A	JUL 2020
12.17B	JUL 2020
12.18	JUL 2020
12.19	JUL 2023
12.20	JUL 2023
12.21	JUL 2023
12.22	JUL 2023
18.i	JUL 2023
18.ii	JUL 2023
18.1	SEP 2023
18.2	SEP 2023
18.3	JUL 2023
18.4	JUL 2023
18.5	SEP 2023
18.6	SEP 2023

REVISION LOG

SEP 2024

Page	Date
18.7	SEP 2023
18.7A	SEP 2023
18.7B	APR 2017
18.7C	APR 2017
18.7D	APR 2017
18.8	APR 2017
18.9	APR 2017
18.10	APR 2017
18.10A	APR 2017
18.10B	APR 2017
18.11	25 OCT 2010
18.12	25 OCT 2010
18.13	25 OCT 2010
18.14	25 OCT 2010
18.15	SEP 2023
18.16	SEP 2023
18.17	SEP 2023
18.18	SEP 2023
18.19	JUL 2023
18.20	JUL 2023
18.21	JUL 2023
18.21A	JUL 2023
18.21B	JUL 2023
18.22	JUL 2023
18.23	JUL 2023
18.24	JUL 2023
18.25	JUL 2023
18.26	JUL 2023
18.27	MAY 2015
18.28	MAY 2015
18.29	JUL 2023
18.30	JUL 2023
18.31	MAY 2015
18.32	MAY 2015
18.33	JUL 2023
18.34	JUL 2023
18.35	JUL 2023
18.36	JUL 2023

Page	Date
18.37	JUL 2023
18.38	JUL 2023
20.i	JUL 2023
20.ii	JUL 2023
20.1	JUL 2023
20.2	JUL 2023
20.2A	JUL 2023
20.2B	JUL 2023
20.3	JUL 2023
20.4	JUL 2023
20.5	JUL 2023
20.6	JUL 2023
20.7	SEP 2023
20.8	SEP 2023
20.9	SEP 2023
20.10	SEP 2023
20.10A	JUL 2023
20.10B	JUL 2023
20.11	JUL 2023
20.11A	JUL 2023
20.11B	JUL 2020
20.11C	JUL 2020
20.11D	JUL 2020
20.11E	JUL 2020
20.11F	JUL 2020
20.11G	JUL 2020
20.11H	JUL 2020
20.11I	JUL 2020
20.11J	JUL 2020
20.11K	JUL 2020
20.11L	JUL 2020
20.11M	JUL 2020
20.11N	JUL 2020
20.12	JUL 2020
20.13	JUL 2023
20.14	JUL 2023
20.15	JUL 2023

Page	Date
20.16	JUL 2023
20.17	JUL 2023
20.18	JUL 2023
20.18A	SEP 2023
20.18B	SEP 2023
20.19	JUL 2023
20.20	JUL 2023
20.21	JUL 2020
20.22	JUL 2020
20.23	MAY 2021
20.24	MAY 2021
20.25	APR 2017
20.26	APR 2017
21.i	SEP 2012
21.ii	SEP 2012
21.1	MAY 2015
21.2	MAY 2015
21.3	SEP 2012
21.4	SEP 2012
21.5	MAY 2015
21.6	MAY 2015
21.7	SEP 2012
21.8	SEP 2012
21.9	JUL 2020
21.10	JUL 2020
21.11	SEP 2012
21.12	SEP 2012
21.13	SEP 2012
21.14	SEP 2012
22.i	SEP 2023
22.ii	SEP 2023
22.1	JUL 2023
22.2	JUL 2023
22.3	JUL 2023
22.4	JUL 2023
22.5	JUL 2023

REVISION LOG

SEP 2024

Page	Date	Page	Date	Page	Date
22.6	JUL 2023	25.25	APR 2019	28.22	JUL 2020
22.7	JUL 2023	25.26	APR 2019	28.23	APR 2019
22.8	JUL 2023	25.27	APR 2019	28.24	APR 2019
22.9	JUL 2023	25.28	APR 2019	28.25	JUL 2020
22.10	JUL 2023	25.29	APR 2019	28.26	JUL 2020
22.11	SEP 2023	25.30	APR 2019	28.27	JUL 2020
22.12	SEP 2023	25.31	JUL 2023	28.28	JUL 2020
22.13	SEP 2023	25.32	JUL 2023	28.29	JUL 2023
22.14	SEP 2023			28.30	JUL 2023
22.15	SEP 2023	28.i	JUL 2023	28.31	JUL 2023
22.16	SEP 2023	28.ii	JUL 2023	28.32	JUL 2023
		28.1	JUL 2023	28.33	JUL 2023
25.i	JUL 2023	28.2	JUL 2023	28.34	JUL 2023
25.ii	JUL 2023	28.3	APR 2017	28.35	JUL 2023
25.1	JUL 2023	28.4	APR 2017	28.36	JUL 2023
25.2	JUL 2023	28.5	JUL 2020	28.37	JUL 2023
25.3	SEP 2012	28.6	JUL 2020	28.38	JUL 2023
25.4	SEP 2012	28.7	JUL 2020	28.39	JUL 2023
25.5	APR 2019	28.8	JUL 2020	28.40	JUL 2023
25.6	APR 2019	28.9	JUL 2020	28.41	JUL 2023
25.7	APR 2019	28.9A	JUL 2020	28.42	JUL 2023
25.8	APR 2019	28.9B	JUL 2020		
25.9	APR 2019	28.10	JUL 2020	29.i	MAY 2015
25.10	APR 2019	28.11	JUL 2020	29.ii	MAY 2015
25.11	APR 2019	28.11A	JUL 2020	29.1	MAY 2015
25.12	APR 2019	28.11B	JUL 2020	29.2	MAY 2015
25.13	MAY 2021	28.11C	JUL 2020	29.3	JUL 2020
25.14	MAY 2021	28.11D	JUL 2020	29.4	JUL 2020
25.15	APR 2019	28.12	JUL 2020	29.5	MAY 2015
25.16	APR 2019	28.13	APR 2017	29.6	MAY 2015
25.17	JUL 2023	28.14	APR 2017	29.7	JUL 2020
25.18	JUL 2023	28.15	JUL 2020	29.8	JUL 2020
25.19	APR 2019	28.16	JUL 2020	29.9	JUL 2020
25.20	APR 2019	28.17	JUL 2020	29.10	JUL 2020
25.21	APR 2019	28.18	JUL 2020		
25.22	APR 2019	28.19	JUL 2020	32.i	SEP 2012
25.23	APR 2019	28.20	JUL 2020	32.ii	SEP 2012
25.24	APR 2019	28.21	JUL 2020	32.1	MAY 2015

REVISION LOG

SEP 2024

Page	Date	Page	Date	Page	Date
32.2	MAY 2015	52.4	JUL 2020	53.17	NOV 2023
32.3	APR 2017	52.5	JUL 2023	53.18	NOV 2023
32.3A	APR 2017	52.6	JUL 2023	53.19	NOV 2023
32.3B	APR 2017	52.7	25 OCT 2010	53.20	NOV 2023
32.4	APR 2017	52.8	25 OCT 2010	53.21	NOV 2023
32.5	SEP 2012	52.9	JUL 2020	53.22	NOV 2023
32.6	SEP 2012	52.10	JUL 2020	53.23	NOV 2023
32.7	SEP 2012	52.11	JUL 2023	53.24	NOV 2023
32.8	SEP 2012	52.12	JUL 2023	53.25	NOV 2023
32.9	SEP 2023	52.13	JUL 2023	53.26	NOV 2023
32.10	SEP 2023	52.14	JUL 2023	53.27	NOV 2023
32.11	SEP 2012	52.15	JUL 2023	53.28	NOV 2023
32.12	SEP 2012	52.16	JUL 2023	53.29	NOV 2023
32.13	MAY 2021	52.17	JUL 2023	53.30	NOV 2023
32.14	MAY 2021	52.18	JUL 2023		
32.15	SEP 2012	52.19	JUL 2023	62.i	JUL 2023
32.16	SEP 2012	52.20	JUL 2023	62.ii	JUL 2023
32.17	SEP 2012	52.21	JUL 2023	62.1	JUL 2023
32.18	SEP 2012	52.22	JUL 2023	62.2	JUL 2023
32.19	JUL 2023			62.3	JUL 2023
32.20	JUL 2023	53.i	NOV 2023	62.4	JUL 2023
32.21	JUL 2023	53.ii	NOV 2023	62.5	JUL 2023
32.22	JUL 2023	53.1	25 OCT 2010	62.6	JUL 2023
32.23	SEP 2012	53.2	25 OCT 2010	62.7	JUL 2023
32.24	SEP 2012	53.3	APR 2019	62.8	JUL 2023
		53.4	APR 2019	62.9	JUL 2023
33.i	MAY 2015	53.5	JUL 2020	62.10	JUL 2023
33.ii	MAY 2015	53.6	JUL 2020	62.10A	JUL 2023
33.1	SEP 2023	53.7	JUL 2020	62.10B	JUL 2023
33.2	SEP 2023	53.8	JUL 2020	62.11	JUL 2023
33.3	MAY 2015	53.9	25 OCT 2010	62.12	JUL 2023
33.4	MAY 2015	53.10	25 OCT 2010	62.13	JUL 2023
		53.11	MAY 2015	62.14	JUL 2023
52.i	JUL 2023	53.12	MAY 2015	62.15	JUL 2023
52.ii	JUL 2023	53.13	NOV 2023	62.16	JUL 2023
52.1	JUL 2020	53.14	NOV 2023	62.17	JUL 2023
52.2	JUL 2020	53.15	NOV 2023	62.17A	JUL 2023
52.3	JUL 2020	53.16	NOV 2023	62.17B	JUL 2023

REVISION LOG

SEP 2024

Page	Date
62.17C	JUL 2023
62.17D	JUL 2020
62.18	JUL 2020
62.19	JUL 2020
62.20	JUL 2020
62.21	APR 2019
62.21A	APR 2019
62.21B	APR 2019
62.22	APR 2019
62.23	APR 2019
62.24	APR 2019
62.25	MAY 2021
62.26	MAY 2021
62.27	MAY 2021
62.28	MAY 2021
62.29	JUL 2020
62.30	JUL 2020
63.i	APR 2017
63.ii	APR 2017
63.1	APR 2017
63.2	APR 2017
63.3	JUL 2020
63.4	JUL 2020
63.5	JUL 2023
63.6	JUL 2023
63.7	APR 2017
63.8	APR 2017
63.9	JUL 2020
63.10	JUL 2020
63.11	APR 2017
63.12	APR 2017
63.13	APR 2017
63.14	APR 2017
64.i	JUL 2023
64.ii	JUL 2023
64.1	JUL 2023

Page	Date
64.2	JUL 2023
64.3	JUL 2023
64.4	JUL 2023
64.5	JUL 2023
64.6	JUL 2023
64.7	JUL 2023
64.8	JUL 2023
64.9	JUL 2023
64.10	JUL 2023
64.11	JUL 2023
64.12	JUL 2023
64.13	JUL 2023
64.14	JUL 2023
64.15	JUL 2023
64.16	JUL 2023
64.17	JUL 2023
64.18	JUL 2023
64.19	JUL 2023
64.20	JUL 2023
64.21	JUL 2023
64.22	JUL 2023
65.i	SEP 2012
65.ii	SEP 2012
65.1	MAY 2015
65.2	MAY 2015
65.3	SEP 2023
65.4	SEP 2023
65.5	MAY 2015
65.6	MAY 2015
65.7	MAY 2015
65.8	MAY 2015
65.9	MAY 2015
65.10	MAY 2015
65.11	SEP 2012
65.12	SEP 2012
67.i	MAY 2015

Page	Date
67.ii	MAY 2015
67.1	MAR 2012
67.2	MAR 2012
67.3	25 OCT 2010
67.4	25 OCT 2010
67.5	25 OCT 2010
67.6	25 OCT 2010
67.7	APR 2017
67.8	APR 2017
67.9	APR 2017
67.10	APR 2017
67.11	MAY 2015
67.12	MAY 2015
67.13	JUL 2020
67.14	JUL 2020
67.15	MAY 2015
67.16	MAY 2015
67.17	NOV 2023
67.18	NOV 2023
71.i	JUL 2020
71.ii	JUL 2020
71.1	JUL 2020
71.2	JUL 2020
71.3	JUL 2020
71.3A	JUL 2020
71.3B	JUL 2020
71.4	JUL 2020
71.5	JUL 2020
71.6	JUL 2020
71.7	JUL 2023
71.7A	JUL 2023
71.7B	JUL 2023
71.8	JUL 2023
71.9	JUL 2020
71.10	JUL 2020
71.11	APR 2019
71.12	APR 2019

REVISION LOG

SEP 2024

Page	Date
71.13	APR 2017
71.14	APR 2017
71.15	APR 2019
71.16	APR 2019
71.17	JUL 2020
71.18	JUL 2020
71.19	JUL 2020
71.20	JUL 2020
71.21	APR 2017
71.22	APR 2017
75.i	25 OCT 2010
75.ii	25 OCT 2010
75.1	25 OCT 2010
75.2	25 OCT 2010
76.i	25 OCT 2010
76.ii	25 OCT 2010
76.1	JUL 2023
76.2	JUL 2023
76.3	25 OCT 2010
76.4	25 OCT 2010
76.5	25 OCT 2010
76.6	25 OCT 2010
76.7	25 OCT 2010
76.8	25 OCT 2010
79.i	APR 2017
79.ii	APR 2017
79.1	APR 2019
79.2	APR 2019
79.3	APR 2017
79.4	APR 2017
79.5	APR 2017
79.6	APR 2017
79.7	APR 2017
79.8	APR 2017
90.i	JUL 2020
90.ii	JUL 2020
90.1	SEP 2023
90.2	SEP 2023
90.3	JUL 2020
90.4	JUL 2020
90.5	JUL 2020
90.6	JUL 2020
90.7	JUL 2020
90.8	JUL 2020
90.9	JUL 2020
90.10	JUL 2020
90.11	JUL 2020
90.12	JUL 2020
90.13	JUL 2020
90.14	JUL 2020
90.15	JUL 2020
90.16	JUL 2020
90.17	JUL 2020
90.18	JUL 2020
90.19	JUL 2020
90.20	JUL 2020
90.21	JUL 2020
90.22	JUL 2020
90.23	JUL 2020
90.24	JUL 2020
90.25	JUL 2020
90.26	JUL 2020
90.27	JUL 2020
90.28	JUL 2020
90.29	JUL 2020
90.30	JUL 2020
90.31	JUL 2020
90.32	JUL 2020
90.33	JUL 2020
90.34	JUL 2020
90.35	JUL 2020
90.36	JUL 2020
90.37	JUL 2020
90.38	JUL 2020
90.39	JUL 2020
90.40	JUL 2020
90.41	JUL 2020
90.42	JUL 2020
90.43	JUL 2020
90.44	JUL 2020
90.45	JUL 2020
90.46	JUL 2020
90.47	JUL 2020
90.48	JUL 2020
90.49	JUL 2020
90.50	JUL 2020
90.51	JUL 2020
90.52	JUL 2020
90.53	JUL 2020
90.54	JUL 2020
90.55	JUL 2020
90.56	JUL 2020
90.57	JUL 2020
90.58	JUL 2020
92.i	JUL 2020
92.ii	JUL 2020
92.1	SEP 2023
92.2	SEP 2023
92.3	JUL 2020
92.4	JUL 2020
92.5	JUL 2020
92.6	JUL 2020
92.7	JUL 2020
92.8	JUL 2020
92.9	JUL 2020
92.10	JUL 2020
92.11	JUL 2020
92.12	JUL 2020
92.13	JUL 2020

REVISION LOG

SEP 2024

Page	*Date*	*Page*	*Date*	*Page*	*Date*
92.14	JUL 2020	92.50	JUL 2020	95.17	APR 2017
92.15	JUL 2020	92.51	JUL 2020	95.18	APR 2017
92.16	JUL 2020	92.52	JUL 2020	95.19	APR 2017
92.17	JUL 2020	92.53	JUL 2020	95.20	APR 2017
92.18	JUL 2020	92.54	JUL 2020	95.21	JUL 2020
92.19	JUL 2020	92.55	JUL 2020	95.22	JUL 2020
92.20	JUL 2020	92.56	JUL 2020	95.23	APR 2019
92.21	JUL 2020	92.57	JUL 2020	95.24	APR 2019
92.22	JUL 2020	92.58	JUL 2020	95.25	APR 2019
92.23	JUL 2020	92.59	JUL 2020	95.26	APR 2019
92.24	JUL 2020	92.60	JUL 2020	95.27	APR 2019
92.25	JUL 2020	92.61	JUL 2020	95.28	APR 2019
92.26	JUL 2020	92.62	JUL 2020	95.29	APR 2019
92.27	JUL 2020	92.63	JUL 2020	95.30	APR 2019
92.28	JUL 2020	92.64	JUL 2020	95.31	APR 2019
92.29	JUL 2020	92.65	JUL 2020	95.32	APR 2019
92.30	JUL 2020	92.66	JUL 2020		
92.31	JUL 2020	92.67	JUL 2020	96.i	JUL 2023
92.31A	JUL 2020	92.68	JUL 2020	96.ii	JUL 2023
92.31B	JUL 2020			96.1	APR 2019
92.32	JUL 2020	95.i	JUL 2020	96.2	APR 2019
92.33	JUL 2020	95.ii	JUL 2020	96.3	APR 2019
92.34	JUL 2020	95.1	APR 2017	96.4	APR 2019
92.35	JUL 2020	95.2	APR 2017	96.4A	JUL 2023
92.36	JUL 2020	95.3	APR 2017	96.4B	JUL 2023
92.37	JUL 2020	95.4	APR 2017	96.5	JUL 2023
92.38	JUL 2020	95.5	APR 2017	96.6	JUL 2023
92.39	JUL 2020	95.6	APR 2017	96.7	JUL 2023
92.40	JUL 2020	95.7	APR 2019	96.8	JUL 2023
92.41	JUL 2020	95.8	APR 2019	96.9	APR 2017
92.42	JUL 2020	95.9	APR 2019	96.10	APR 2017
92.43	JUL 2020	95.10	APR 2019	96.11	APR 2017
92.44	JUL 2020	95.11	APR 2017	96.12	APR 2017
92.45	JUL 2020	95.12	APR 2017	96.13	APR 2017
92.46	JUL 2020	95.13	APR 2017	96.14	APR 2017
92.47	JUL 2020	95.14	APR 2017	96.15	APR 2017
92.48	JUL 2020	95.15	APR 2017	96.16	APR 2017
92.49	JUL 2020	95.16	APR 2017	96.17	JUL 2023

REVISION LOG

SEP 2024

Page	Date	Page	Date	Page	Date
96.18	JUL 2023	98.ii	JUL 2023	98.32	APR 2017
96.19	JUL 2023	98.1	JUL 2023	98.33	APR 2017
96.20	JUL 2023	98.2	JUL 2023	98.34	APR 2017
		98.2A	JUL 2020	98.35	APR 2017
97.i	APR 2019	98.2B	JUL 2020	98.36	APR 2017
97.ii	APR 2019	98.3	APR 2017	98.37	APR 2017
97.1	APR 2019	98.4	APR 2017	98.38	APR 2017
97.2	APR 2019	98.5	APR 2017	98.39	APR 2017
97.3	APR 2019	98.6	APR 2017	98.40	APR 2017
97.4	APR 2019	98.7	APR 2017	98.41	APR 2017
97.5	APR 2019	98.8	APR 2017	98.42	APR 2017
97.6	APR 2019	98.9	APR 2017	98.43	APR 2017
97.7	APR 2019	98.10	APR 2017	98.44	APR 2017
97.8	APR 2019	98.11	APR 2017	98.45	JUL 2020
97.9	APR 2019	98.12	APR 2017	98.45A	JUL 2020
97.10	APR 2019	98.13	JUL 2023	98.45B	JUL 2020
97.11	APR 2019	98.14	JUL 2023	98.46	JUL 2020
97.12	APR 2019	98.15	APR 2019	98.47	JUL 2023
97.13	APR 2019	98.16	APR 2019	98.48	JUL 2023
97.14	APR 2019	98.17	APR 2017	98.49	APR 2019
97.15	APR 2019	98.18	APR 2017	98.50	APR 2019
97.16	APR 2019	98.19	APR 2017	98.51	APR 2019
97.17	JUL 2020	98.20	APR 2017	98.52	APR 2019
97.18	JUL 2020	98.21	APR 2017	98.53	APR 2019
97.19	APR 2019	98.22	APR 2017	98.54	APR 2019
97.20	APR 2019	98.23	APR 2017	98.55	APR 2019
97.21	APR 2019	98.24	APR 2017	98.56	APR 2019
97.22	APR 2019	98.24A	JUL 2020	98.57	APR 2019
97.23	APR 2019	98.24B	JUL 2020	98.58	APR 2019
97.24	APR 2019	98.24C	JUL 2020	98.59	APR 2019
97.25	APR 2019	98.24D	JUL 2020	98.60	APR 2019
97.26	APR 2019	98.25	APR 2017	98.61	JUL 2020
97.27	APR 2019	98.26	APR 2017	98.62	JUL 2020
97.28	APR 2019	98.27	APR 2017	98.63	JUL 2023
97.29	APR 2019	98.28	APR 2017	98.64	JUL 2023
97.30	APR 2019	98.29	APR 2017		
		98.30	APR 2017	99.i	APR 2017
98.i	JUL 2023	98.31	APR 2017	99.ii	APR 2017

REVISION LOG

SEP 2024

Page	*Date*
99.1	JUL 2023
99.2	JUL 2023
99.3	JUL 2023
99.4	JUL 2023
99.5	JUL 2023
99.6	JUL 2023
99.7	JUL 2023
99.8	JUL 2023
99.9	JUL 2023
99.10	JUL 2023
100.i	MAY 2021
100.ii	MAY 2021
100.1	SEP 2024
100.2	SEP 2024
100.3	SEP 2024
100.4	SEP 2024
100.5	SEP 2024
100.6	SEP 2024
100.7	SEP 2024
100.8	SEP 2024
100.9	SEP 2024
100.10	SEP 2024